SUZUKI

DL1050RC/RQ

SERVICE MANUAL

99500-06L00-03E

IMPORTANT

All street-legal Suzuki motorcycles with engine displacement of 50 cc or greater are subject to Environmental Protection agency emission regulations. These regulations set specific standards for exhaust emission output levels as well as particular servicing requirements. This manual includes specific information required to properly inspect and service this street-legal motorcycle in accordance with all EPA regulations. It is strongly recommended that the chapter on Emission Control, Periodic Servicing and FI System and Fuel System be thoroughly reviewed before any type of service work is performed. Further information concerning the EPA emission regulations and U.S. Suzuki's emission control program can be found in the U.S. SUZUKI EMISSION CONTROL PROGRAM MANUAL/SERVICE BULLETIN.

IMPORTANT NOTICE

WARNING / CAUTION / NOTICE / NOTE

Please read this manual and follow its instructions carefully. To emphasize special information, the symbol and the words **⚠ WARNING**, **⚠ CAUTION** , ***NOTICE*** and **NOTE** have special meanings. Pay special attention to the messages highlighted by these signal words.

⚠ WARNING

Indicates a potential hazard that could result in death or serious injury.

⚠ CAUTION

Indicates a potential hazard that could result in minor or moderate injury.

NOTICE

Indicates a potential hazard that could result in motorcycle or equipment damage.

NOTE

Indicates special information to make maintenance easier or instructions clearer.

Please note, however, that the warnings and cautions contained in this manual cannot possibly cover all potential hazards relating to the servicing, or lack of servicing, of the motorcycle. In addition to the WARNINGS, CAUTIONS and NOTICES stated, you must use good judgement and basic mechanical safety principles. If you are unsure about how to perform a particular service operation, ask a more experienced mechanic for advice.

FOREWORD

This manual contains an introductory description on the SUZUKI DL1050RC/RQ and procedures for its inspection/service and overhaul of its main components.
Other information considered as generally known is not included.
Read the GENERAL INFORMATION section to familiarize yourself with the motorcycle and its maintenance. Use this section as well as other sections to use as a guide for proper inspection and service.
This manual will help you know the motorcycle better so that you can assure your customers of fast and reliable service.

* *This manual has been prepared on the basis of the latest specifications at the time of publication. If modifications have been made since then, differences may exist between the content of this manual and the actual motorcycle.*
* *Illustrations in this manual are used to show the basic principles of operation and work procedures. They may not represent the actual motorcycle exactly in detail.*
* *This manual is written for persons who have enough knowledge, skills and tools, including special tools, for servicing SUZUKI motorcycles. If you do not have the proper knowledge and tools, ask your authorized SUZUKI motorcycle dealer to help you.*

⚠ WARNING

Inexperienced mechanics or mechanics without the proper tools and equipment may not be able to properly perform the services described in this manual.

Improper repair may result in injury to the mechanic and may render the motorcycle unsafe for the rider and passenger.

SUZUKI MOTOR CORPORATION

99500-06L00-03E

TABLE OF CONTENTS

Precautions **00-i**
Precautions 00-1

General Information **0-i**
General Information 0A-1
Maintenance and Lubrication 0B-1
Service Data 0C-1

Engine **1-i**
Precautions 1-1
Engine General Information and Diagnosis 1A-1
Emission Control Devices 1B-1
Engine Electrical Devices 1C-1
Engine Mechanical 1D-1
Engine Lubrication System 1E-1
Engine Cooling System 1F-1
Fuel System 1G-1
Ignition System 1H-1
Starting System 1I-1
Charging System 1J-1
Exhaust System 1K-1

Suspension **2-i**
Precautions 2-1
Suspension General Diagnosis 2A-1
Front Suspension 2B-1
Rear Suspension 2C-1
Wheels and Tires 2D-1

Driveline / Axle **3-i**
Precautions 3-1
Drive Chain / Drive Train / Drive Shaft 3A-1

Brakes **4-i**
Precautions 4-1
Brake Control System and Diagnosis 4A-1
Front Brakes 4B-1
Rear Brakes 4C-1
ABS 4E-1

Transmission / Transaxle **5-i**
Precautions 5-1
Manual Transmission 5B-1
Clutch 5C-1

Steering **6-i**
Precautions 6-1
Steering General Diagnosis 6A-1
Steering / Handlebar 6B-1

Body and Accessories **9-i**
Precautions 9-1
Wiring Systems 9A-1
Lighting Systems 9B-1
Combination Meter / Fuel Meter / Horn 9C-1
Exterior Parts 9D-1
Body Structure 9E-1

Control Systems **10-i**
Precautions 10-1
Cruise Control System 10A-1
Immobilizer Control System 10C-1
Communication System 10H-1

Section 00

Precautions

CONTENTS

Precautions 00-1
Precautions 00-1
General Precautions 00-1
Precautions for Catalytic Converter 00-1
Precautions for Electrical Circuit Service 00-2
Precautions for Circuit Tester 00-8
Precautions for SDS-II 00-8

Precautions

Precautions

General Precautions

BENL06L20000001

⚠ WARNING

- **Proper service and repair procedures are important for the safety of the service mechanic and the safety and reliability of the motorcycle.**
- **When 2 or more persons work together, pay attention to the safety of each other.**
- **When it is necessary to run the engine indoors, make sure that exhaust gas is forced outdoors.**
- **When working with toxic or flammable materials, make sure that the area you work in is well ventilated and that you follow all of the material manufacturer's instructions.**
- **To avoid getting burned, do not touch the engine, engine oil and exhaust system until they have cooled.**

NOTICE

- **Never use gasoline as a cleaning solvent.**
- **After servicing the fuel, oil, exhaust or brake systems, check all lines and fittings related to the system for leaks.**
- **If parts replacement is necessary, replace the parts with Suzuki Genuine Parts or their equivalent.**
- **When removing parts that are to be reused, keep them arranged in an orderly manner so that they may be reinstalled in the proper order and orientation.**
- **Be sure to use special tools when instructed.**
- **Make sure that all parts used in reassembly are clean. Lubricate them when specified.**
- **Use the specified lubricant, bond, or sealant.**
- **When removing the battery, disconnect the negative (–) cable first and then the positive (+) cable.**
- **When reconnecting the battery, connect the positive (+) cable first and then the negative (–) cable, and replace the terminal cover on the positive (+) terminal.**
- **When performing service to electrical parts, if the service procedures do not require use of battery power, disconnect the negative (–) cable from the battery.**
- **When tightening the cylinder head or case bolts and nuts, tighten the larger sizes first. Always tighten the bolts and nuts diagonally from the inside toward outside and to the specified tightening torque.**
- **Whenever you remove oil seals, gaskets, packing, O-rings, locking washers, self-locking nuts, cotter pins, circlips and certain other parts as specified, be sure to replace them with new ones. Also, before installing these new parts, be sure to remove any left over material from the mating surfaces.**
- **Never reuse a circlip. When installing a new circlip, take care not to expand the end gap larger than required to slip the circlip over the shaft. After installing a circlip, always ensure that it is completely seated in its groove and securely fitted.**
- **Use a torque wrench to tighten fasteners to the specified torque. Wipe off grease and oil if a thread is smeared with them.**
- **After reassembling, check parts for tightness and proper operation.**
- **To protect the environment, do not unlawfully dispose of used motor oil and other fluids: batteries, and tires.**
- **To protect Earth's natural resources, properly dispose of used motorcycle and parts.**

Precautions for Catalytic Converter

BENL06L20000002

As this vehicle is equipped with a catalytic converter, use only unleaded fuel and be careful not to let a large amount of unburned fuel enter the converter, or it can be damaged.

- Conduct a spark jump test only when necessary to the shortest possible time without opening the throttle.
- Conduct engine compression checks within the shortest possible time.
- Avoid any situations which can result in engine misfire. (e.g. starting the engine when the fuel tank is nearly empty.)

Precautions for Electrical Circuit Service

BENL06L20000003

When handling the electrical parts or servicing the electric system, observe the following points for the safety of the system.

Electrical Parts

Connector / Coupler

- Faulty electrical system is often related to poor electrical contact of connector/coupler. Before servicing individual electrical part, check electrical contact of the connector/coupler.
- When connecting a connector, be sure to push it in until a click is felt.

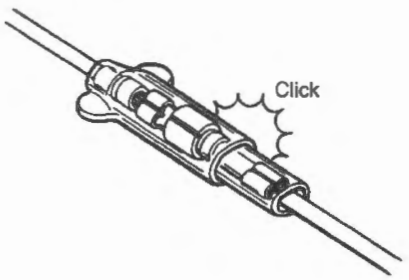

I310G1000001-01

- With a lock type coupler, be sure to release the lock when disconnecting, and push it in fully to engage the lock when connecting.
- When disconnecting the coupler, be sure to hold the coupler body and do not pull the lead wires.
- Inspect each terminal on the connector/coupler for looseness or bending.
- Push in the coupler straightly. An angled or skewed insertion may cause the terminal to be deformed, possibly resulting in poor electrical contact.
- Inspect each terminal for corrosion and contamination. The terminals must be clean and free of any foreign material which could impede proper terminal contact.
- Before refitting the sealed coupler, make sure its seal rubber is positioned properly. The seal rubber may possibly come off the position during disconnecting work and if the coupler is refitted with the seal rubber improperly positioned, it may result in poor water sealing.

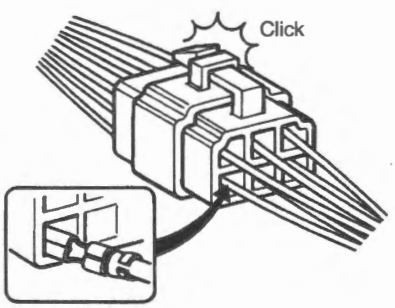

I310G1000002-01

- Inspect each lead wire circuit for poor connection by shaking it by hand lightly. If any abnormal condition is found, repair or replace.

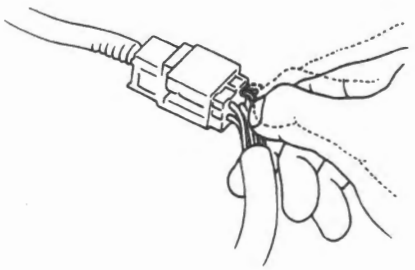

I310G1000003-02

- When taking measurements at electrical coupler (1) using a tester probe (2), be sure to insert the probe from the wire harness side (rear) of the coupler.

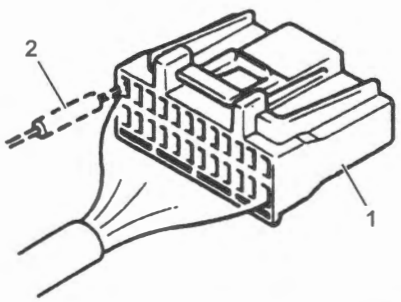

IF04K1000002-02

- When connecting meter probe (2) from the terminal side of the coupler (1) because it cannot be connected from harness side, use extra care not to bend the male terminal of coupler of force its female terminal open for connection.
  In case of such coupler as shown connect probe as shown to avoid opening female terminal.
  Never connect probe where male terminal is supposed to fit.

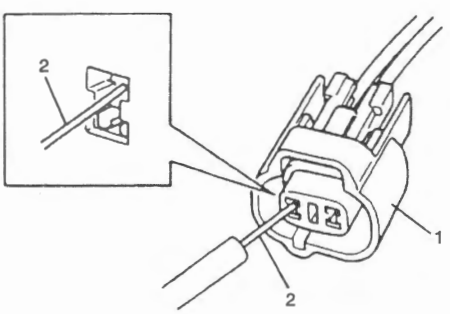

ID26J1000014-01

- Avoid applying grease or other similar material to connector/coupler terminals to prevent electric trouble.

Clamp

- Clamp the wire harness at such positions as indicated in "Wiring Harness Routing Diagram" in Section 9A (Page 9A-23).
- Bend the clamp properly so that the wire harness is clamped securely.
- In clamping the wire harness, use care not to allow it to hang down.
- Do not use wire or any other substitute for the band type clamp.

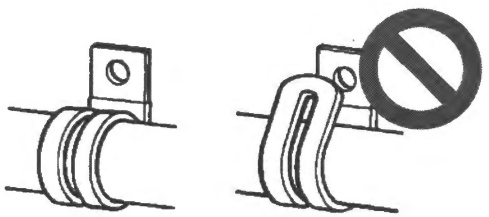

IH17K1000001-01

Fuse

- When a fuse is blown, always investigate the cause to correct it and then replace the fuse.
- Do not use a fuse of different capacity.
- Do not use wire or any other substitute for the fuse.

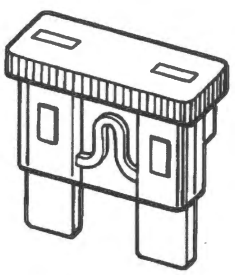

I649G1000001-02

Switch

Never apply grease material to switch contact points to prevent damage.

ECM / CDI UNIT / ABS control unit/HU / Various sensors

- Since each component is a high-precision part, great care should be taken not to apply any severe impacts during removal and installation.

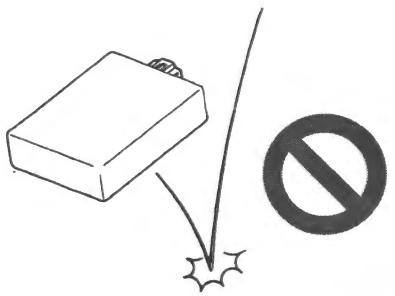

IH17K1000002-01

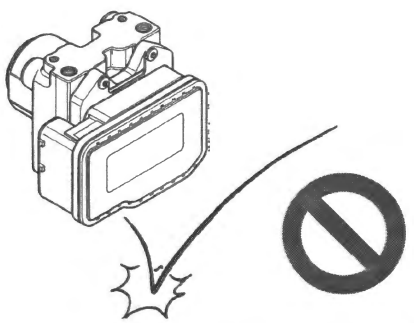

IH17K1000003-01

- Be careful not to touch the electrical terminals of the electrical parts (ECM / CDI UNIT, etc.). The static electricity from your body may damage them.

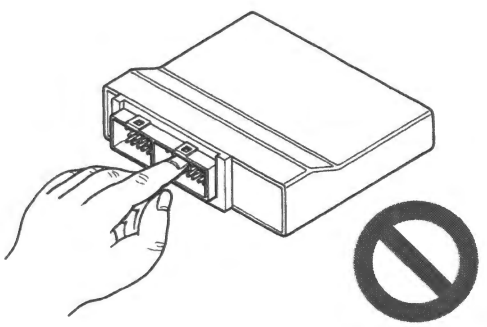

IH17K1000004-01

- When disconnecting and connecting the coupler, make sure to turn OFF the ignition switch (1), or electrical parts may get damaged.

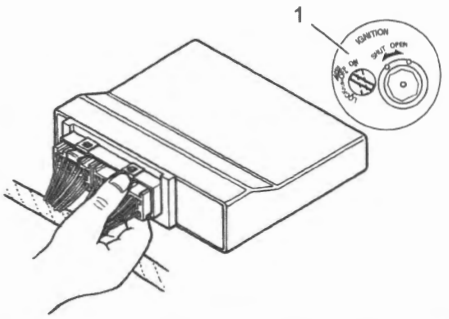

IE39J1000001-01

- Never allow dust or water to contact the ABS control unit/HU.

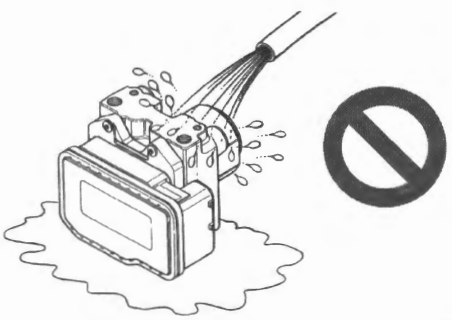

IH17K1000005-01

- The ABS control unit/HU cannot be disassembled. Replace the whole unit with a new one.

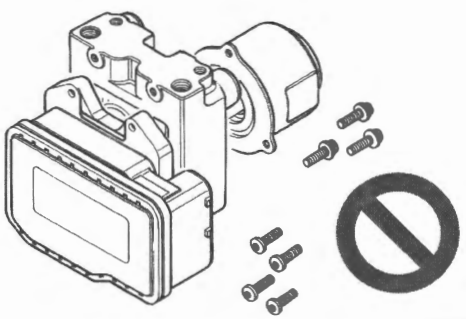

IH17K1000006-01

- Never connect any tester (voltmeter, ohmmeter, or whatever) to the electronic unit when its coupler is disconnected. Otherwise, damage to electronic unit may result.
- Never connect an ohmmeter to the electronic unit with its coupler connected. If attempted, damage to ECM / CDI UNIT / ABS control unit/HU or sensor may result.
- Be sure to use a specified voltmeter/ohmmeter. Otherwise, accurate measurements may not be obtained and personal injury may result.

Battery

- Select the same type MF battery when replacing the battery.
- Battery connection in reverse polarity is strictly prohibited. Such a wrong connection will damage the components of the FI system and ABS instantly when reverse power is applied.

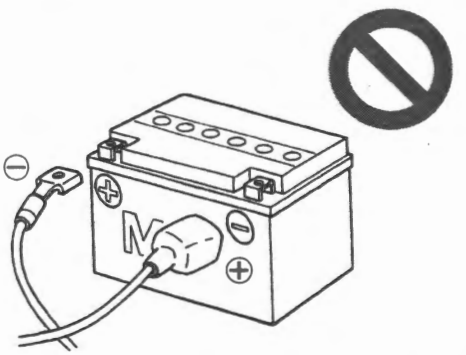

I718H1000004-01

- Removing any battery terminal of a running engine is strictly prohibited. The moment such removal is made, damaging counter electromotive force will be applied to the electronic unit which may result in serious damage.

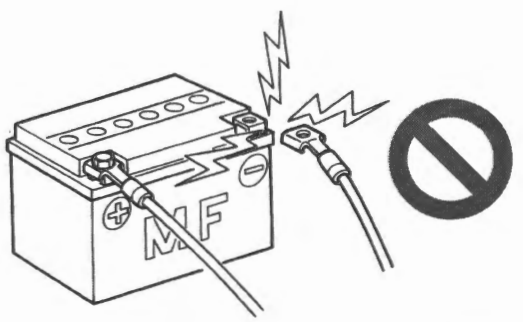

IH17K1000007-01

- Before measuring voltage at each terminal, check to make sure that battery voltage is 11 V or higher. Terminal voltage check with a low battery voltage will lead to erroneous diagnosis.

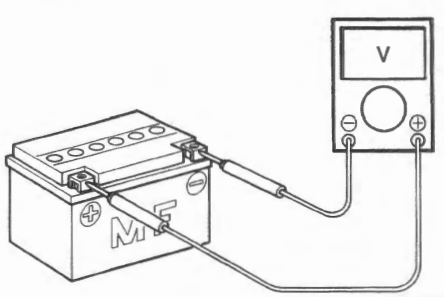

I310G1000012-02

Electrical Circuit Inspection Procedure

While there are various methods for electrical circuit inspection, described here is a general method to check for open and short circuit using an ohmmeter and a voltmeter.

Open circuit check

Possible causes for the open circuit are as follows. As the cause can exist in the connector/coupler or terminal, they need to be checked carefully.

- Loose connection of connector/coupler
- Poor contact of terminal (due to dirt, corrosion or rust, poor contact tension, entry of foreign object etc.)
- Wire harness being open.
- Poor terminal-to-wire connection.

When checking system circuits including an electronic control unit such as ECM, etc., it is important to perform careful check, starting with items which are easier to check.

1) Disconnect the negative (–) cable from the battery.
2) Check each connector/coupler at both ends of the circuit being checked for loose connection. Also check for condition of the coupler lock if equipped.

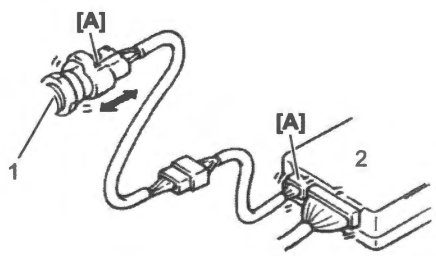

IE02K1000004-01

[A]:	Check for loose connection
1.	Sensor
2.	Electrical part

3) Using a test male terminal, check the female terminals of the circuit being checked for contact tension.
Check each terminal visually for poor contact (possibly caused by dirt, corrosion, rust, entry of foreign object, etc.). At the same time, check to make sure that each terminal is fully inserted in the coupler and locked.
If contact tension is not enough, rectify the contact to increase tension or replace. The terminals must be clean and free of any foreign material which could impede proper terminal contact.

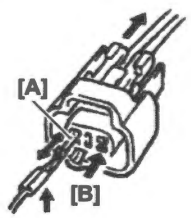

IE02K1000005-01

[A]:	Check contact tension by inserting and removing.
[B]:	Check each terminal for bend and proper alignment.

4) Using continuity inspect or voltage check procedure as described below, inspect the wire harness terminals for open circuit and poor connection. Locate abnormality, if any.

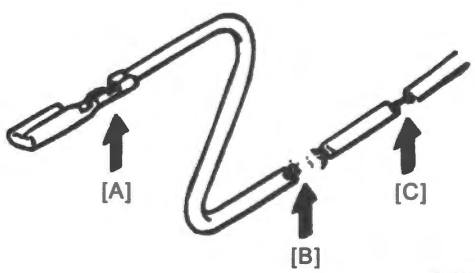

ID26J1000005-03

[A]:	Looseness of crimping
[B]:	Open
[C]:	Thin wire (A few strands left)

Continuity check

1) Measure resistance across coupler [B] (between [A] and [C] in the figure).
If no continuity is indicated (infinity or over limit), the circuit is open between terminals [A] and [C].

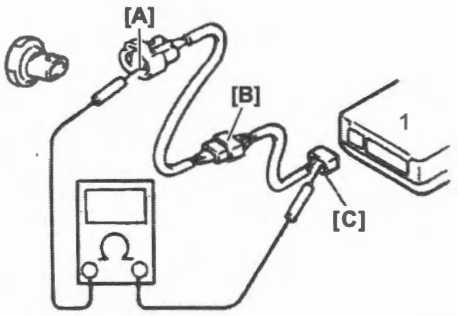

IE02K1000007-01

1. Electrical part

2) Disconnect the coupler [B] and measure resistance between couplers [A] and [B-1].
If no continuity is indicated, the circuit is open between couplers [A] and [B-1]. If continuity is indicated, there is an open circuit between couplers [B-2] and [C] or an abnormality in coupler [B-2] or coupler [C].

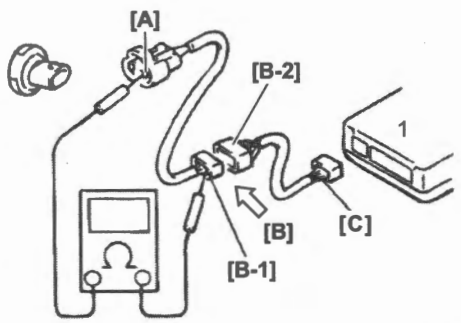

IE02K1000008-01

1. Electrical part

Voltage check

If voltage is supplied to the circuit being checked, voltage check can be used as circuit check.

1) With all connectors/couplers connected and voltage applied to the circuit being checked, measure voltage between each terminal and body ground.
2) If measurements were taken as shown in the figure and results were listed in the following, it means that the circuit is open between terminals [A] and [B].

Voltage between
[A] and body ground: 0 V
[B] and body ground: Approx. 5 V
[C] and body ground: Approx. 5 V

3) Also, if measured values are as listed following, a resistance (abnormality) exists which causes the voltage drop in the circuit between terminals [A] and [B].

Voltage between
[A] and body ground: 3 V – 2 V voltage drop
[B] and body ground: Approx. 5 V
[C] and body ground: Approx. 5 V

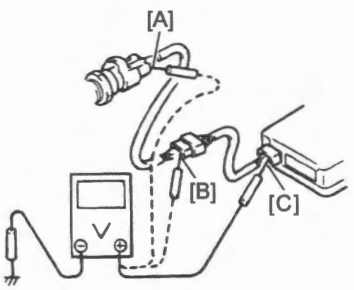

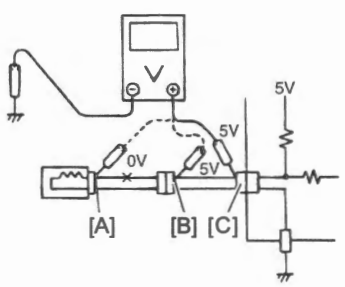

ID26J1000008-05

Short circuit check (Wire harness to ground)

1) Disconnect the negative (–) cable from the battery.
2) Disconnect the connectors/couplers at both ends of the circuit to be checked.

NOTE

If the circuit to be checked branches to other parts as shown, disconnect all connectors/ couplers of those parts. Otherwise, diagnosis will be wrong.

3) Measure resistance between terminal at one end of circuit ([A] terminal in the figure) and body ground. If continuity is indicated, there is a short circuit to ground between terminals [A] and [C].

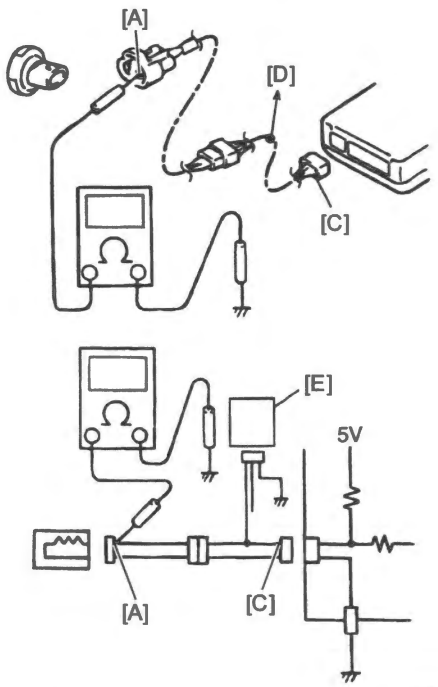

IF04K1000003-01

[D]: To other parts	[E]: Other parts

4) Disconnect the connector/coupler included in circuit (coupler [B]) and measure resistance between terminal [A] and body ground. If continuity is indicated, the circuit is shorted to the ground between terminals [A] and [B].

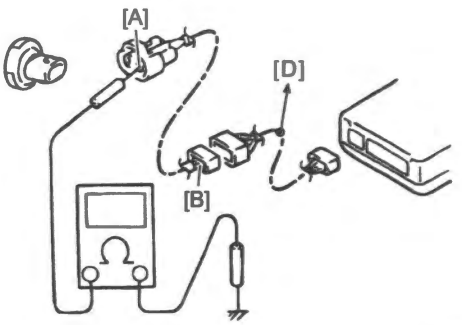

IF04K1000001-01

[D]: To other parts

Twist Pair Wire Harness

NOTE

For locations where twist pair wire harness are used, refer to "How to Read Terminal Nos." in Section 9A (Page 9A-1).

- A twist (1) in the twist pair wire harnesses except around the connectors (2) should be within 100 mm (3.9 in.). Excessively-loose lines can be affected by electric noise.

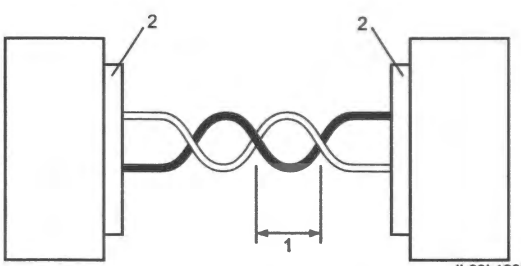

IL06L1000002-01

- Do not connect twist pair line terminals using a bypass wire (1). Doing so makes the twist pair line receive electric noise interference.

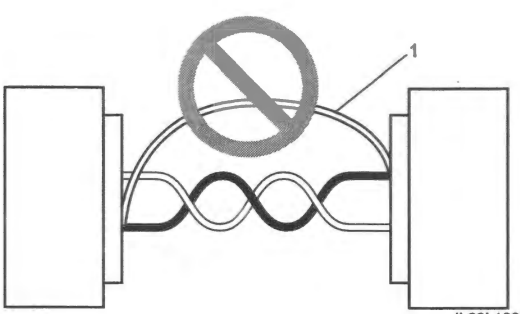

IL06L1000001-01

Precautions for Circuit Tester

BENL06L20000004

- Recommend the use of circuit tester set.

Special tool
(A): 09900–25011

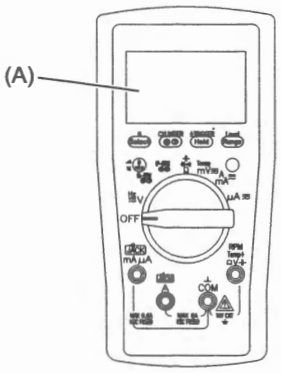

IJ37K1000001-01

- Read the instruction manual to use the tester correctly.
- Be sure to set the tester to the correct testing range.
- If the voltage and current are not known, make measurements using the highest range.

Symbols

Symbol	Definition
⎓	DC
~	AC
Ω	Resistance
•)))	Continuity
⊣◀	Diode

Precautions for SDS-II

BENL06L20000005

- In some models of the SUZUKI motorcycles, the DTC can be confirmed by using SDS-II.
- Read the instruction manual when using SDS-II and operate it properly.

Special tool
(A): 09904–41031
09904–41041

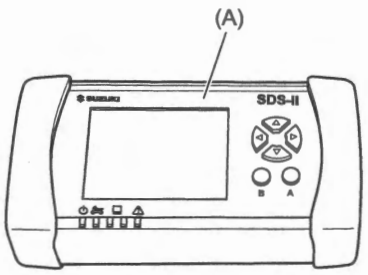

IH18K1000002-01

Section 0

General Information

0

CONTENTS

General Information 0A-1
Service Manual Information 0A-1
General Description 0A-1
Abbreviations 0A-1
SAE-to-Former SUZUKI Term 0A-2
Symbols 0A-3
Wire Color Symbols 0A-4
How to Read Terminal Numbers 0A-5
SDS-II 0A-6
Applicable Model / VIN 0A-7
Vehicle Side View 0A-8
Vehicle Identification Number 0A-8
Warning, Caution and Information Labels Location 0A-9
Component Location 0A-10
Electrical Components Location 0A-10
Technical Features 0A-12
General Description 0A-12
Engine Control System Description 0A-12
Electric Throttle Control System Description 0A-13
Traction Control System Description 0A-15
Suzuki Drive Mode Selector (SDMS) Description (If Equipped) 0A-16
Easy Start System Description 0A-16
Crankcase Emission Control System Description 0A-17
Exhaust Emission Control System Description 0A-18
Evaporative Emission Control System 0A-19
Fuel System Description 0A-20
ABS (Without Motion Track Brake System) 0A-21
ABS (With Motion Track Brake System) 0A-22
IMU (With Motion Track Brake System) 0A-25
Motion Track Brake System 0A-25
Hill Hold Control System (With Motion Track Brake System) 0A-26
Slope Dependent Control System (With Motion Track Brake System) 0A-28
Load Dependent Control System (With Motion Track Brake System) 0A-28
Wheel Speed Sensor Description 0A-28
Combination Meter System Description 0A-29
Service Reminder Indicator Description 0A-33
Cruise Control System Description (If Equipped) 0A-34
Immobilizer Control System Description (If Equipped) 0A-38
CAN Communication System Description 0A-39

Maintenance and Lubrication 0B-1
Precautions 0B-1
Precautions for Maintenance 0B-1
Scheduled Maintenance 0B-1
Periodic Maintenance Schedule Chart 0B-1
Repair Instructions 0B-3
Air Cleaner Element 0B-3
Exhaust Pipe Bolt and Muffler Mounting Bolts 0B-4
Valve Clearance 0B-5
Spark Plugs 0B-8
Fuel Hose 0B-11
Evaporative emission control system 0B-12
Engine Oil 0B-14
Engine Oil Filter Replacement 0B-15
PAIR (air supply) System 0B-15
Engine Coolant 0B-16
Radiator Hose 0B-17
Clutch Hose 0B-17
Clutch Fluid 0B-18
Drive Chain 0B-19
Brakes 0B-20
Brake Hose 0B-23
Brake Fluid 0B-23
Tires 0B-25
Steering 0B-26
Front Forks 0B-27
Rear Suspension 0B-27
Chassis Bolts and Nuts 0B-28
Lubrication 0B-31
Spoke Wheel (DL1050RC) 0B-31
Specifications 0B-32
Tightening Torque Specifications 0B-32
Special Tools and Equipment 0B-33
Recommended Service Material 0B-33
Special Tool 0B-33

Service Data 0C-1
Precautions 0C-1
Precautions for Service Data 0C-1
Specifications 0C-1
Specifications 0C-1

Service Data.....0C-3
Fasteners Information.....0C-10
Tightening Torque List.....0C-12
Special Tools and Equipment.....0C-18
Recommended Service Material.....0C-18
Fuel / Oil / Fluid / Coolant Recommendation....0C-18
Special Tool.....0C-20

General Information

Service Manual Information

General Description

Abbreviations

BENL06L20111001

A:
AAT: Ambient Air Temperature
ABDC: After Bottom Dead Center
ABS: Anti-lock Brake System
AC: Alternating Current
ACL: Air Cleaner
AKI: Anti-knock Index
AP: Atmospheric Pressure
API: American Petroleum Institute
ATDC: After Top Dead Center
A/F: Air Fuel Ratio
B:
BBDC: Before Bottom Dead Center
BTDC: Before Top Dead Center
B+: Battery Positive Voltage
C:
CAN: Controller Area Network
CDI: Capacitive Discharge Ignition
CKP: Crankshaft Position
CKT: Circuit
CLP: Clutch Lever Position
CMP: Camshaft Position
CO: Carbon Monoxide
CPU: Central Processing Unit
CVT: Continuously Variable Transmission
D:
DC: Direct Current
DOHC: Double Over Head Camshaft
DRL: Daytime Running Light
DTC: Diagnostic Trouble Code
E:
ECM: Engine Control Module
ECT: Engine Coolant Temperature
ECU: Electronic Control Unit
EEPROM: Electrically Erasable Programmable Read Only Memory
ET: Engine Temperature
ETV: Electric Throttle Valve
EVAP: Evaporative Emission
EX.: Exhaust
EXCV: Exhaust Control Valve
EXCVA: Exhaust Control Valve Actuator
F:
FI: Fuel Injection, Fuel Injector
FP: Fuel Pump
FPR: Fuel Pressure Regulator
FTPC: Fuel Tank Pressure Control
FWD: Forward
G:
GEN: Generator
GND: Ground
GP: Gear Position
H:
HC: Hydrocarbons
HI: High
HO2: Heated Oxygen
HU: Hydraulic Unit
I:
IAP: Intake Air Pressure
IAT: Intake Air Temperature
I.D.: Inside Diameter
IG: Ignition
IMU: Inertial Measurement Unit
IN.: Intake
ISC: Idle Speed Control
J:
JASO: Japanese Automobile Standards Organization
J/C: Junction Coupler
L:
LCD: Liquid Crystal Display
LED: Light Emitting Diode
LH: Left Hand
LO: Low
M:
Max: Maximum
MIL: Malfunction Indicator Light
Min.: Minimum
N:
NOx: Nitrogen Oxides
O:
O2: Oxygen
OBD: On-Board Diagnostic System
OHC: Over Head Camshaft
O.D.: Outside Diameter
P:
PAIR: Pulsed Secondary Air Injection
PCV: Positive Crankcase Ventilation
PP: Pulley Position
R:
RH: Right Hand
ROM: Read Only Memory
RON: Research Octane Number
RPM: Engine Speed
S:
SAE: Society of Automotive Engineers
SDMS: Suzuki Drive Mode Selector
SDS: Suzuki Diagnosis System
SRAD: Suzuki Ram Air Direct
STCS: Secondary Throttle Control System
STD: Standard
STP: Secondary Throttle Position
STV: Secondary Throttle Valve

STVA: Secondary Throttle Valve Actuator
T:
TC: Traction Control
TDC: Top Dead Center
TO: Tip-over
TP: Throttle Position
TPS: Throttle Position Sensor
V:
VVT: Variable Valve Timing

SAE-to-Former SUZUKI Term

BENL06L20111010

This list shows SAE (Society of Automotive Engineers) J1930 terms and abbreviations which may be used in this manual in compliance with SAE recommendations, as well as their former SUZUKI names.
Ex. SAE term (Abbreviation): Former SUZUKI term
A:
Air Cleaner (ACL): Air Cleaner, Air Cleaner Box
B:
Barometric Pressure (BARO): Barometric Pressure, Atmospheric Pressure (APS, AP Sensor)
Battery Positive Voltage (B+): Battery Voltage, +B
C:
Camshaft Position Sensor (CMP Sensor): Camshaft Position Sensor (CMPS)
Crankshaft Position Sensor (CKP Sensor): Crankshaft Position Sensor (CKPS), Crank Angle
D:
Data Link Connector (DLC): Dealer Mode Coupler
Diagnostic Test Mode (DTM): —
Diagnostic Trouble Code (DTC): Diagnostic Code, Malfunction Code
E:
Electronic Ignition (EI): —
Engine Control Module (ECM): Engine Control Module (ECM), FI Control Unit, Engine Control Unit (ECU)
Engine Coolant Level (ECL): Coolant Level
Engine Coolant Temperature (ECT): Coolant Temperature, Engine Coolant Temperature, Water Temperature
Engine Speed (RPM): Engine Speed (RPM)
Evaporative Emission (EVAP): Evaporative Emission
Evaporative Emission Canister (EVAP Canister): — (Canister)
Exhaust Control System: EXC System (EXCS)
Exhaust Control Valve: EXC Valve (EXCV)
Exhaust Control Valve Actuator: EXCV Actuator (EXCVA)
F:
Fan Control (FC): —
Fuel Level Sensor: Fuel Level Sensor, Fuel Level Gauge
Fuel Pump (FP): Fuel Pump (FP)
G:
Generator (GEN): Generator
Ground (GND): Ground (GND, GRD)
H:
Hydrocarbons (HC): Hydrocarbons
Heated Oxygen Sensor (HO2S): Heated Oxygen Sensor (HO2S), O2 sensor
I:
Intake Air Temperature (IAT): Intake Air Temperature (IAT), Air Temperature
Idle Speed Control (ISC): —
Ignition Control (IC): Electronic Spark Advance (ESA)
Ignition Control Module (ICM): —
M:
Malfunction Indicator Lamp (MIL): LED Light, Malfunction Indicator Light (MIL)
Manifold Absolute Pressure (MAP): Intake Air Pressure (IAP), Intake Vacuum
Mass Air Flow (MAF): Air Flow
O:
On-Board Diagnostic (OBD): Self-Diagnosis Function, Diagnostic
Open Loop (OL): —
P:
Power Control Module (PCM): —
Programmable Read Only Memory (PROM): —
Pulsed Secondary Air Injection (PAIR): Pulse Air Control (PAIR)
Purge Valve (Purge Valve): Purge Valve (SP Valve)
R:
Random Access Memory (RAM): —
Read Only Memory (ROM): ROM
S:
Secondary Air Injection (AIR): —
Secondary Throttle Control System (STCS): STC System (STCS)
Secondary Throttle Valve (STV): ST Valve (STV)
Secondary Throttle Valve Actuator (STVA): STV Actuator (STVA)
T:
Throttle Body (TB): Throttle Body (TB)
Throttle Body Fuel Injection (TBI): Throttle Body Fuel Injection (TBI)
Throttle Position Sensor (TP Sensor): TP Sensor (TPS)
Tank Pressure Control Valve: TPC Valve (TPCV)
Traction Control (TC): Traction Control
V:
Voltage Regulator (VR): Voltage Regulator
Volume Air Flow (VAF): Air Flow

Symbols

BENL06L20111002

Listed in the table below are the symbols indicating instructions and other information necessary for servicing. The meaning of each symbol is also included in the table.

NOTE

The table below shows generally used symbols, and includes some symbols not used in this manual.

Symbol	Definition
	Torque control required. Data beside it indicate specified torque.
	Apply oil. Use engine oil unless otherwise specified.
	Apply molybdenum oil solution. (Mixture of engine oil and SUZUKI MOLY PASTE in a ratio of 1 : 1).
A	Apply SUZUKI SUPER GREASE A. 99000-25011
C	Apply SUZUKI SUPER GREASE C. 99000-25030
L	Apply SUZUKI MOLYBDENUM GREASE L. 99000-25280
M	Apply SUZUKI MOLY PASTE. 99000-25140
S	Apply SUZUKI SILICONE GREASE. 99000-25100
W	Apply SUZUKI WATER RESISTANT GREASE EP2. 99000-25350
1207B	Apply SUZUKI BOND 1207B. 99000-31140
1215	Apply SUZUKI BOND 1215. 99000-31110
1216B	Apply SUZUKI BOND 1216B. 99000-31230
1303B	Apply THREAD LOCK CEMENT 1303B. 99000-32030
1322D	Apply THREAD LOCK CEMENT 1322D. 99000-32150
1342H	Apply THREAD LOCK CEMENT 1342H. 99000-32160
1360	Apply THREAD LOCK CEMENT 1360. 99000-32130
LLC	Use SUZUKI SUPER LONG LIFE COOLANT (BLUE). 99000-99032-20X
	Use SUZUKI LONG LIFE COOLANT (GREEN). 99000-99032-12X
FORK	Apply or use fork oil.
BF	Apply or use brake fluid.
TOOL	Use special tool.
	Do not reuse.
	Note on reassembly.

Wire Color Symbols

BENL06L20111003

Symbol	Wire Color	Symbol	Wire Color
B	Black	Lbl	Light blue
Be	Beige	Lg	Light green
Bl	Blue	O	Orange
Br	Brown	P	Pink
Dbr	Dark brown	R	Red
Dg	Dark green	V	Violet
G	Green	W	White
Gr	Gray	Y	Yellow

There are two kinds of colored wire used in this vehicle. One is single-colored wire and the other is dual-colored (striped) wire.
The single-colored wire uses only one color symbol (i.e. G). The dual-colored wire uses two color symbols (i.e. G/Y). The first symbol represents the base color of the wire and the second symbol represents the color of the stripe.

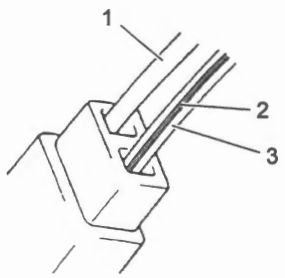

ID26J1010224-02

1. G (Base color)	3. G (Base Color)
2. Y (Stripe color)	

How to Read Terminal Numbers

BENL06L20111004

- The coupler section is described in an illustration viewed from terminal side. However, when using illustration viewed from harness side, the coupler illustration is described together with the symbol mark (1).
- For the visual direction of coupler such as ECM and ABS CONTROL UNIT/HU with many terminals, symbol mark (1) is also described together.
- The coupler information is expressed in terminal layout, lock position (2) and terminal numbers (3).
- The terminal numbers in this manual are described using "T".

NOTE

Molded terminal numbers that are different from the above can be found on some connectors in rare cases. These molded numbers are not applied in this manual.

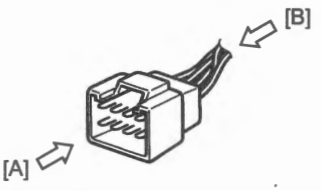

IJ27K1010012-01

[A]: View terminal side	[B]: View harness side

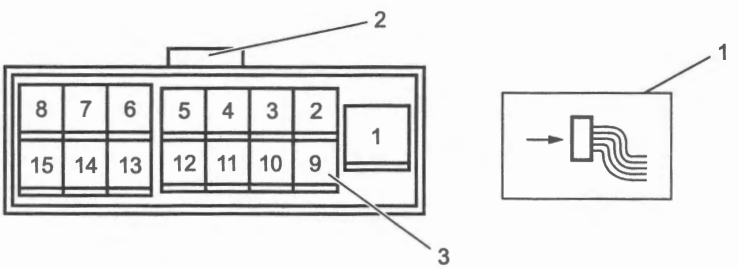

IJ27K1010001-02

Female Terminal

Bounds of the coupler shape are expressed in a single line. The terminal numbers are described with an integer from 1 sequentially from the top left corner.

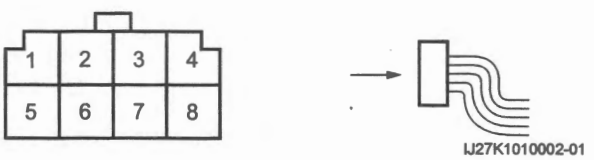

IJ27K1010002-01

Male Terminal

Bounds of the coupler shape are expressed in a double line. The terminal numbers are described with an integer from 1 sequentially from the top right corner.



IJ27K1010003-01

Controller / Sensor

In the case of simple substance of sensors without wiring harness, they are described as shown in the illustration below.

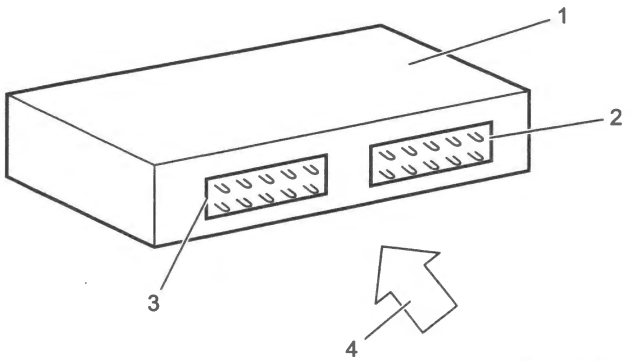

IJ27K1010004-04

1. Controller/sensor	3. Coupler "B"
2. Coupler "A"	4. View

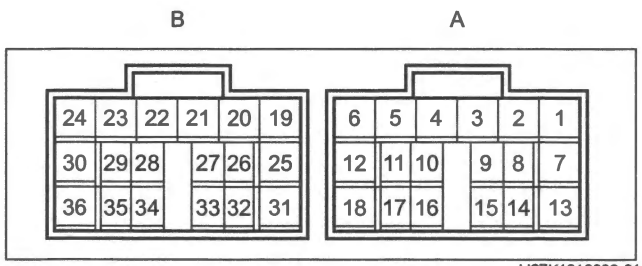

IJ27K1010008-01

SDS-II

BENL06L20111005

SDS-II Function

NOTE

For details of each SDS-II function, referring to the SDS-II operation manual.

Function	Description
Data monitor	ECU data can be displayed and the displayed data can be saved.
DTC inspection	Current DTC, past DTC and pending DTC can be displayed.
Show failure data	"Show failure data" can be displayed.
Active control	• Various actuators can be operated. • The learned value of various systems can be reset.
Utility	• Vehicle information can be displayed. • The status of "System Readiness Test" can be displayed.
Reprogramming	The ECM can be programmed.

Corresponding ECU

NOTE

The item of the available "Active control" and "Utility" varies according to the type of the vehicle.

ECU	Data monitor	DTC inspection	Show failure data	Active control	Utility	Reprogramming
ECM	Available	Available	Available	Available *1	Available *2	Available
ABS control unit/HU	Available	Available	Not available	Available *1	Not available	Not available

*1: Active control

ECM	• PAIR control solenoid drive control	• ISC aperture learned value reset
	• Steering damper solenoid operating control	• ISC air volume control
	• STV / ETV drive control	• Cooling fan relay control
	• TP fully closed learned value reset	• EVAP purge valve operating control
	• Exhaust valve drive control	• Long term fuel trim reset
	• ISC rpm control	• MIL
ABS control unit/HU	• ABS HU operating 2	

*2: Utility

ECM	• Vehicle information	• Readiness test results

Applicable Model / VIN

BENL06L20111006

Applicable Model

DL1050RC/RQ

Applicable VIN

NOTE

- **"#" indicates any check digit from 0 to 9 and X.**
- **"@" indicates the year of manufacture or the month and year of manufacture.**

Applicable Model	VIN Number	Country or Area
DL1050RCM0	JS1EF12E#L7100001 –	U.S.A. and Canada
	JS1EF12D#L7100001 –	California State
DL1050RQM0	JS1EF11E#L7100001 –	U.S.A. and Canada
	JS1EF11D#L7100001 –	California State

Vehicle Side View

BENL06L20111007

SUZUKI DL1050RC



IL06L1011004-02

SUZUKI DL1050RQ



IL06L1011003-01

Vehicle Identification Number

BENL06L20111008

The frame serial number or V.I.N. (Vehicle Identification Number) (1) is stamped on the steering head tube. The engine serial number (2) is located on the left side of the crankcase.

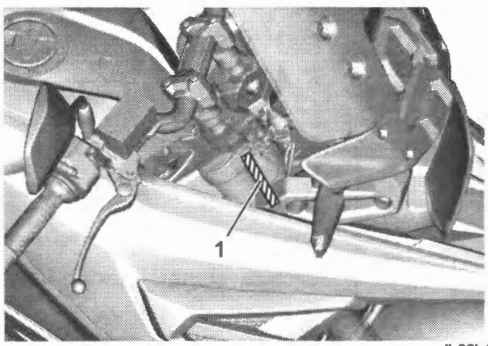

IL06L1011005-01

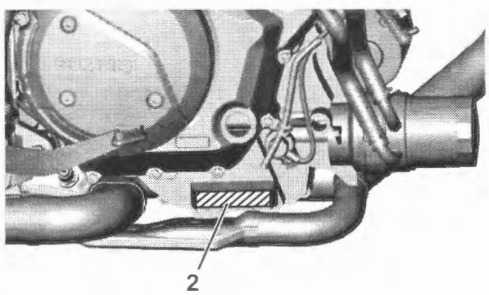

IL06L1011006-01

Warning, Caution and Information Labels Location

BENL06L20111009

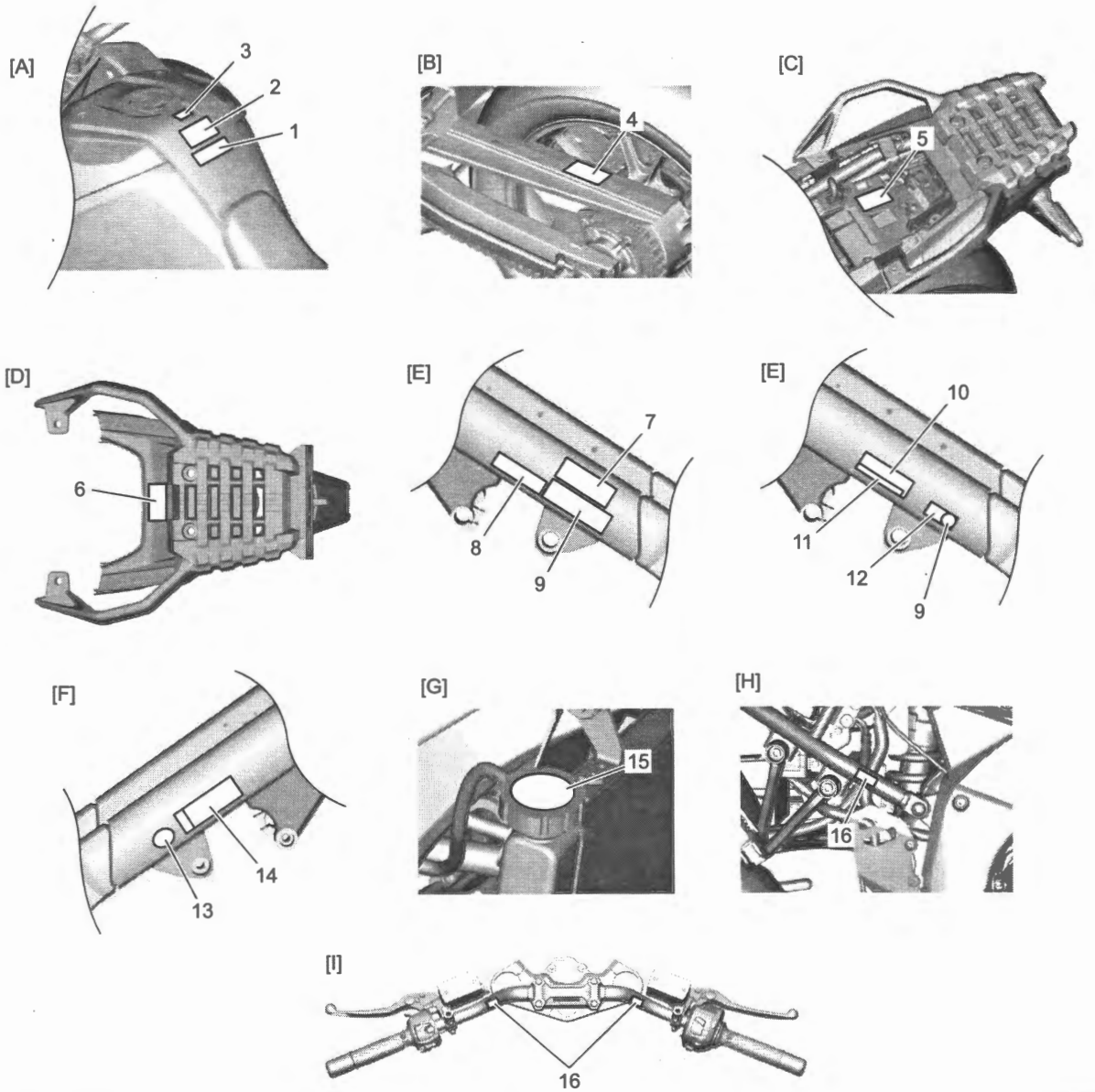

IL06L1011007-02

[A]: Fuel tank cover	1. Fuel information label or Helmet label	10. I.D. plate or production label (If equipped)
[B]: Chain case	2. General warning label	11. Manufacturer label (If equipped)
[C]: Electric parts holder	3. Gasoline label or Fuel limitation label (If equipped)	12. UN noise label (If equipped)
[D]: Rear fender (rear)	4. Tire information label	13. License label (If equipped)
[E]: Frame (left side)	5. Manual notice label (If equipped)	14. I.D. plate or Safety plate (If equipped)
[F]: Frame (right side)	6. Loading capacity label or carrier warning label	15. Radiator cap label (If equipped)
[G]: Radiator cap	7. Vacuum hose routing label (If equipped)	16. Brake fluid information label (If equipped)
[H]: Seat rail	8. EPA noise label (If equipped)	
[I]: Handlebars	9. Information label (If equipped)	

Component Location

Electrical Components Location

BENL06L20113001

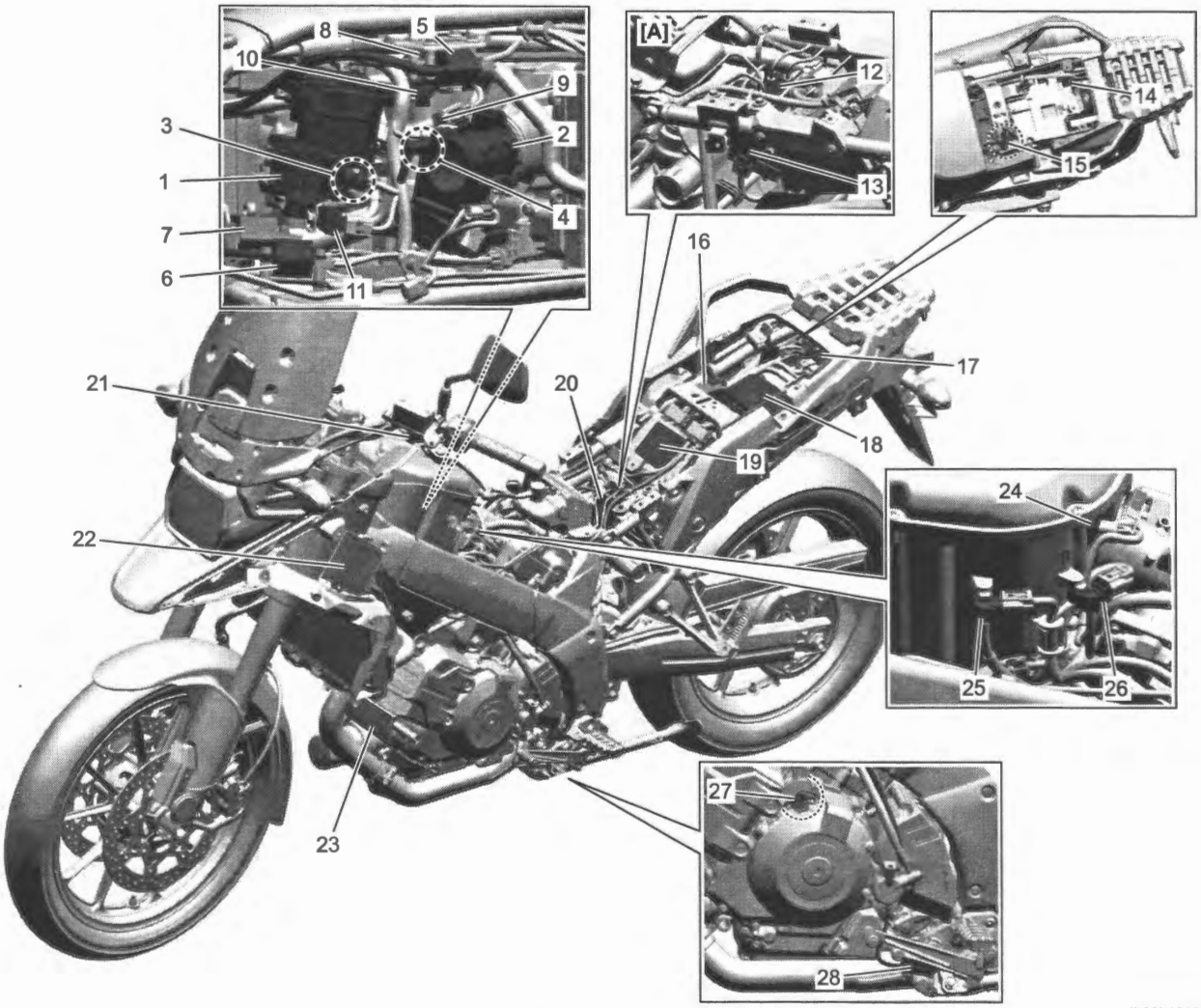

IL06L1011008-01

[A]: With motion track brake system	10. PAIR control solenoid valve	20. ABS control unit/HU
1. Throttle body #1 (incorporating TP sensor (main and sub) and throttle valve motor)	11. EVAP system purge control solenoid valve	21. Clutch lever position switch
2. Throttle body #2 (incorporating TP sensor (main and sub) and throttle valve motor)	12. ABS control unit/HU	22. Regulator/rectifier
3. Fuel injector #1	13. IMU	23. Starter motor
4. Fuel injector #2	14. Mode select coupler (6P)	24. IAT sensor
5. Ignition coil #11	15. Mode select coupler (2P)	25. IAP sensor #1
6. Ignition coil #12	16. Starter relay	26. IAP sensor #2
7. Ignition coil #21	17. Relay box (incorporating FP relay, throttle valve motor relay, cooling fan relay and starter sub relay)	27. CKP sensor
8. Ignition coil #22	18. ECM	28. Side-stand switch
9. ECT sensor	19. Battery	

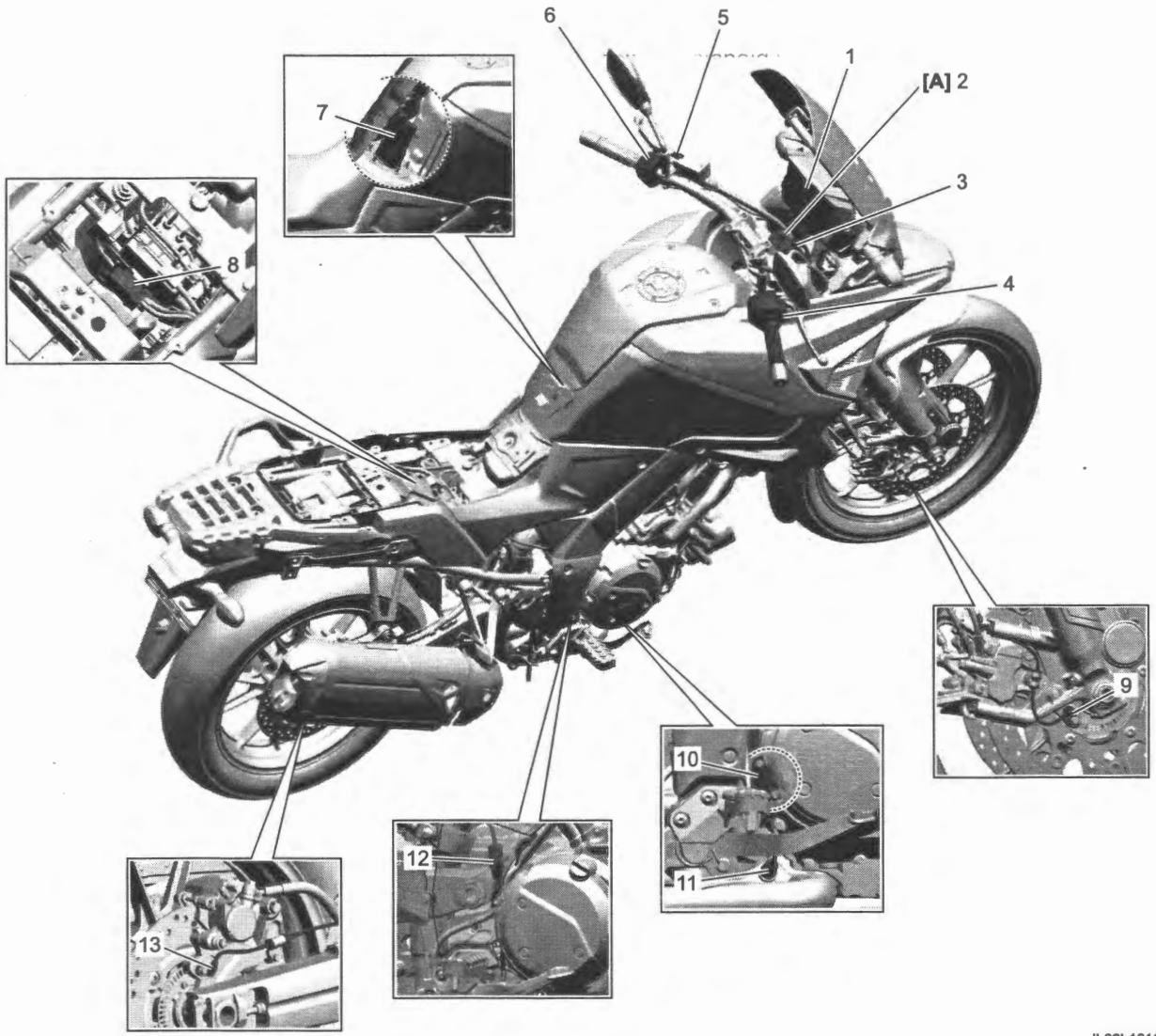

IL06L1011009-01

[A]: With immobilizer control system	5. Clutch lever position switch	10. GP switch
1. Combination meter	6. Left handlebar switch	11. HO2 sensor
2. Immobilizer antenna	7. Fuel pump	12. Rear brake switch
3. Ignition switch	8. TO sensor	13. Rear wheel speed sensor
4. Throttle grip assembly (incorporating accelerator position sensor and right handlebar switch)	9. Front wheel speed sensor	

Technical Features

General Description

Engine Control System Description

BENL06L20121001

- The engine control in this motorcycle is controlled by ECM.

Item	Description
Injection control	ECM controls fuel injector and injects fuel of the most suitable quantity in the most suitable timing. Also, ECM stops the fuel injector control based on the engine and driving conditions.
Ignition control	ECM controls ignition coil and ignition of the spark plug in the most suitable ignition timing based on the engine and driving conditions. (e.g. engine cranking, idle speed, normal driving, accelerating, decelerating, etc.)
Fuel pump relay control	ECM controls ON or OFF of the fuel pump relay to operate the fuel pump based on the ignition switch position and engine operating conditions.
Electronic throttle control	Refer to "Electronic Throttle Control System Description:" in Section 0A.
Starter relay control	• ECM controls ON or OFF of the starter relay to operate the starter motor corresponding to the state of the ignition switch and actuation of the engine stop / starter switch ("START" position). • ECM controls easy start system. Refer to "Easy Start System Description": Technical Features (Page 0A-16).
Cooling fan relay control	ECM controls ON or OFF of the cooling fan relay to operate the cooling fan based on the engine coolant temperature condition.
EVAP system purge control solenoid valve control	ECM performs the EVAP system purge control solenoid valve ON / OFF control based on the engine and driving conditions.
PAIR control solenoid valve control	ECM performs the PAIR control solenoid valve ON / OFF control based on the engine and driving conditions.
HO2 sensor heater control	ECM controls the heater in the HO2 sensor and performs the early activation of the HO2 sensor.
Traction control	Refer to "Traction Control System Description": Technical Features (Page 0A-15).
Cruise control (if equipped)	Refer to "Cruise Control System Description (If Equipped)": Technical Features (Page 0A-34).
Immobilizer control (if equipped)	Refer to "Immobilizer Control System Description (If Equipped)": Technical Features (Page 0A-38).
CAN communication function	ECM uses CAN communication to communicate with combination meter, ABS control unit / HU (with motion track brake system), IMU (with motion track brake system) and SDS-II tool. Refer to "CAN Communication System Description": Technical Features (Page 0A-39).

- ECM has a self-diagnosis function which detects a malfunction in this system. When detecting any malfunction, ECM performs fail-safe function based on the level of the malfunction.
  - Self-diagnosis function: ☞(Page 1A-1)
  - Fail-safe function: ☞(Page 1A-19)
- ECM receives vehicle speed signal using front wheel speed sensor signal from ABS control unit / HU.

Engine Control System Input / Output Diagram

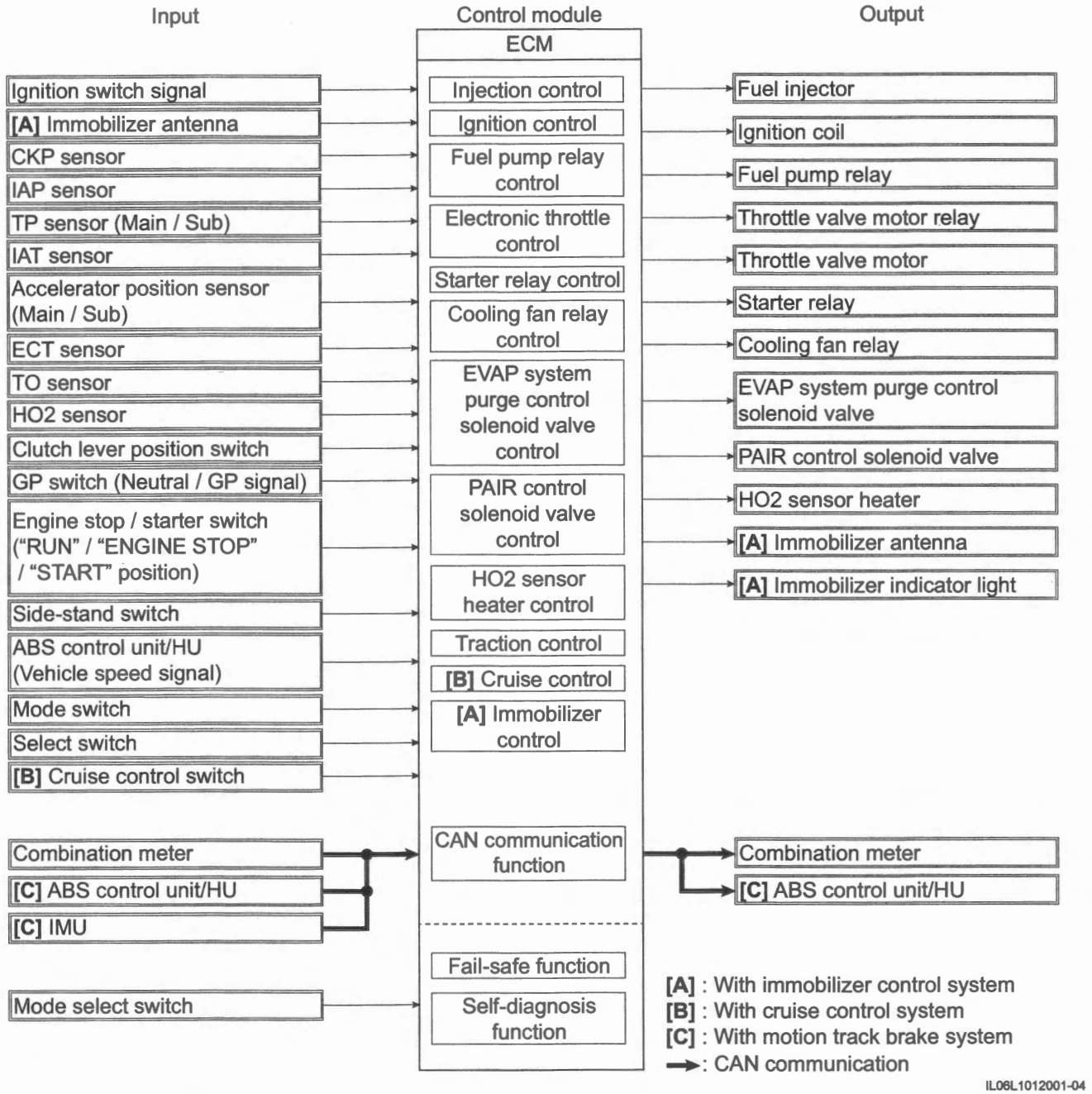

IL06L1012001-04

Electric Throttle Control System Description

BENL06L20121002

The electric throttle control system consists of the following:

- Throttle body incorporating the throttle valve, throttle valve motor and TP sensors (main and sub)
- Throttle grip assembly incorporating accelerator position sensors (main and sub)
- ECM

Operation Description

- ECM (1) detects opening angle of the throttle grip based on the signal voltage of the accelerator position sensor (2). Using that data and engine operation condition, ECM calculates the optimum throttle valve opening. On the other hand, it detects the throttle valve opening based on the signal voltage of the TP sensor (3) and compares this value with the above calculated optimum throttle valve opening. When there is a difference between them, ECM changes the duty ratio of throttle valve motor according to this difference to drive the throttle valve motor (4). When there is no difference, ECM fixes the duty ratio of throttle valve motor to maintain the throttle valve opening. In this way, the throttle valve (5) is opened and closed to achieve the optimum throttle valve opening.
- In this system, TP sensor and accelerator position sensor have 2 sensors (main and sub) each to assure highly accurate and reliable control and abnormality detection. When ECM detects an abnormality in the system, it stops controlling the throttle valve motor.
- This throttle body is not equipped with ISC valve for idle speed control. Idle speed control is performed by the throttle valve motor by adjusting the throttle valve opening. And in this system, does not have to adjust the throttle valve synchronization among two cylinders because it is adjusted automatically at idle speed after warming up by ECM.
- Throttle grip assembly has a cruise control cancel switch function. ECM performs cancel of the cruise control, when turning the throttle grip approximately 8 degrees beyond the fully closed position. (if equipped)

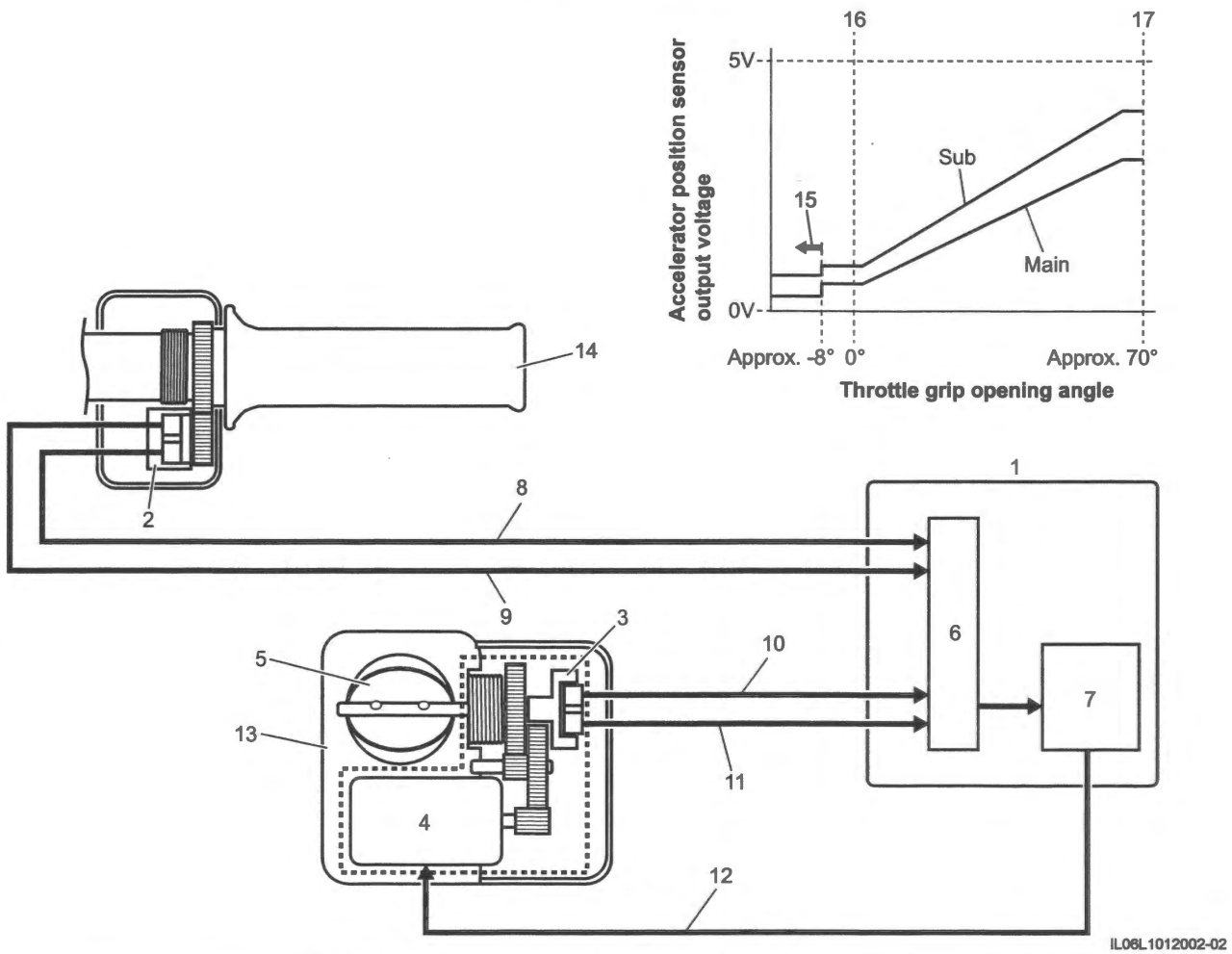

IL08L1012002-02

6. CPU	10. TP sensor (main) signal circuit	14. Throttle grip assembly
7. Throttle valve motor driver	11. TP sensor (sub) signal circuit	15. Cruise control cancel switch position (if equipped)
8. Accelerator position sensor (main) signal circuit	12. Drive circuit of throttle valve motor	16. Fully closed position
9. Accelerator position sensor (sub) signal circuit	13. Throttle body	17. Fully opened position

Traction Control System Description

BENL06L20121003

- When the traction control system senses rear wheel spin (revolution difference between the front wheel and rear wheel) during start up or acceleration, the system regulates the engine torque to restore gripping power of the rear wheel and insure the running stability.
- The system senses the condition of rear wheel rotation by the signals sent from front and rear wheel speed sensors, TP sensor, CKP sensor and GP switch. When the rear wheel spin has been detected, ECM reduces engine power output to prevent its spin by controlling ignition timing and throttle valve motor.
- The traction control status (ON / OFF) and levels can be selected by the mode switch (1) and select switch (2). There are 3 steps of traction control levels (from mode 1 to mode 3) and the higher figure has higher effect of the control. If "OFF" is selected, the engine output is not regulated even when the rear wheel spins freely.

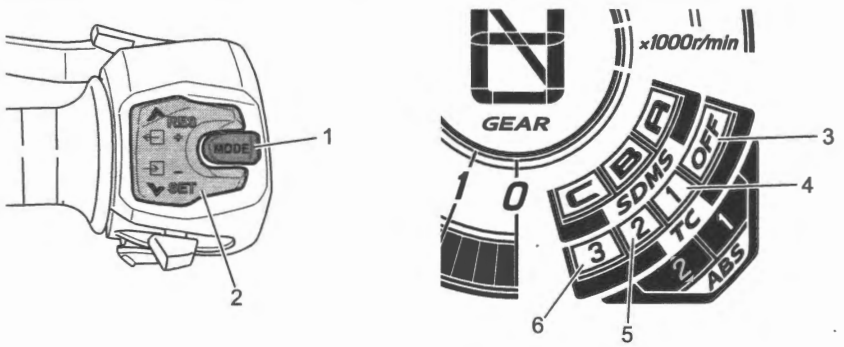

IL06L1012004-04

3. OFF	4. Mode 1	5. Mode 2	6. Mode 3

Traction Control Indicator

- The traction control indicator (1) comes on when the ignition switch is turned "ON" and goes off after the vehicle speed exceeds 5 km/h (3 mile/h). After that the indicator light does not come on after the vehicle speed decreases to less than 5 km/h (3 mile/h).
- The traction control indicator blinks when controlling the engine torque by the traction control system.
- The traction control indicator comes on and remains on when the traction control system is not working due to a system malfunction.

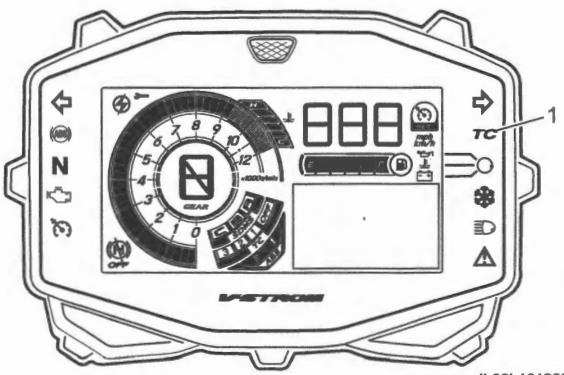

IL06L1012006-01

Suzuki Drive Mode Selector (SDMS) Description (If Equipped)

BENL06L20121004

- Suzuki drive mode selector (SDMS) is the function that can change engine power characteristics optionally.
- The 3 driving modes can be selected by the mode switch (1) and select switch (2).

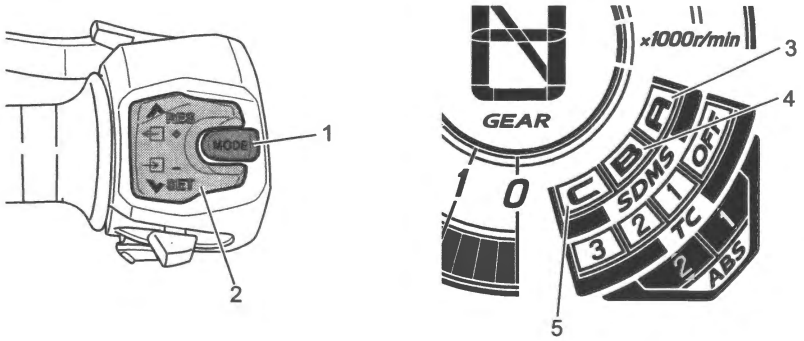

IL06L1012007-03

3. Mode A	4. Mode B	5. Mode C

Easy Start System Description

BENL06L20121005

This model has adopted easy start system which operates cranking continuously for specified time without continuous pushing of the engine stop / starter switch ("START" position).

- ECM monitors various signals and one-push of the engine stop / starter switch ("START" position) makes the starter relay to ON to operate the starter motor until the engine is started. However, if the engine cannot be started within the specified time, the ECM sets the starter relay to OFF.
- When the ignition switch is ON and, judging conditions of all of the following factors, ECM controls the starter relay to set ON. However, responding to either of the following conditions, ECM sets the starter relay to OFF.
  - Status of GP switch or clutch lever position switch
  - Status of side-stand switch
  - Status of engine stop / starter switch ("START" position)
  - Status of engine start

NOTE

When the engine might not start easily, grasp the clutch lever with neutral position and pushing the engine stop / starter switch ("START" position) continually enable continuous cranking.

Crankcase Emission Control System Description

BENL06L20121006

The engine is equipped with a PCV system.
Blow-by gas in the engine is constantly drawn into the crankcase (1), which is returned to the combustion chamber through the PCV hose (2), air cleaner box (3) and throttle body (4).

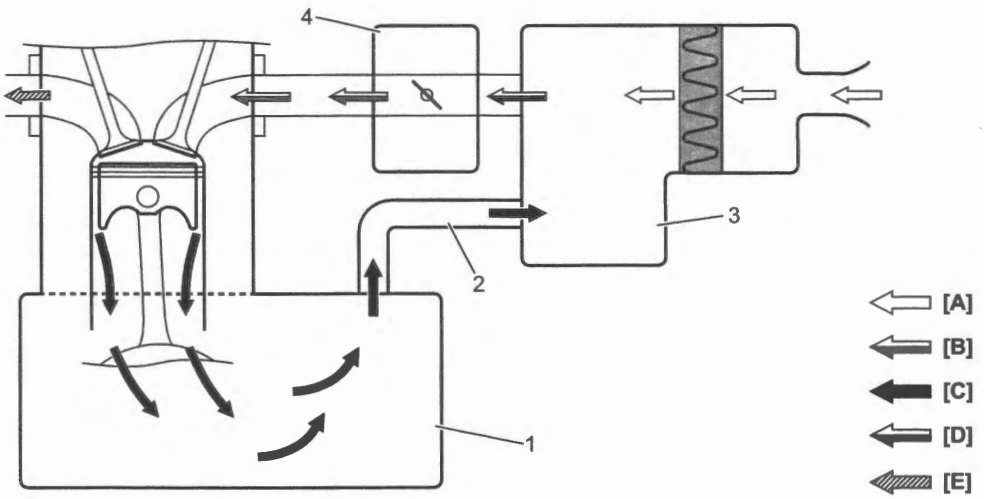

IL06L1012008-01

[A]: Fresh air	[C]: Blow-by gas	[E]: Exhaust gas
[B]: Fuel/Air mixture	[D]: Air/Blow-by gas mixture	

Exhaust Emission Control System Description

BENL06L20121007

The exhaust emission control system is composed of the PAIR system and three-way catalyst system.

- The fresh air is drawn into the exhaust ports through the PAIR control solenoid valve (1) and PAIR reed valve (2). The PAIR control solenoid valve is controlled by the ECM (3), based on the engine and driving conditions. And the PAIR reed valve is operated by the exhaust-pulse.
- The three-way catalyst (4) is emission control device added to the exhaust system to lower the levels of hydrocarbon (HC), carbon monoxide (CO) and nitrogen oxides (NOx) pollutants in exhaust gases.

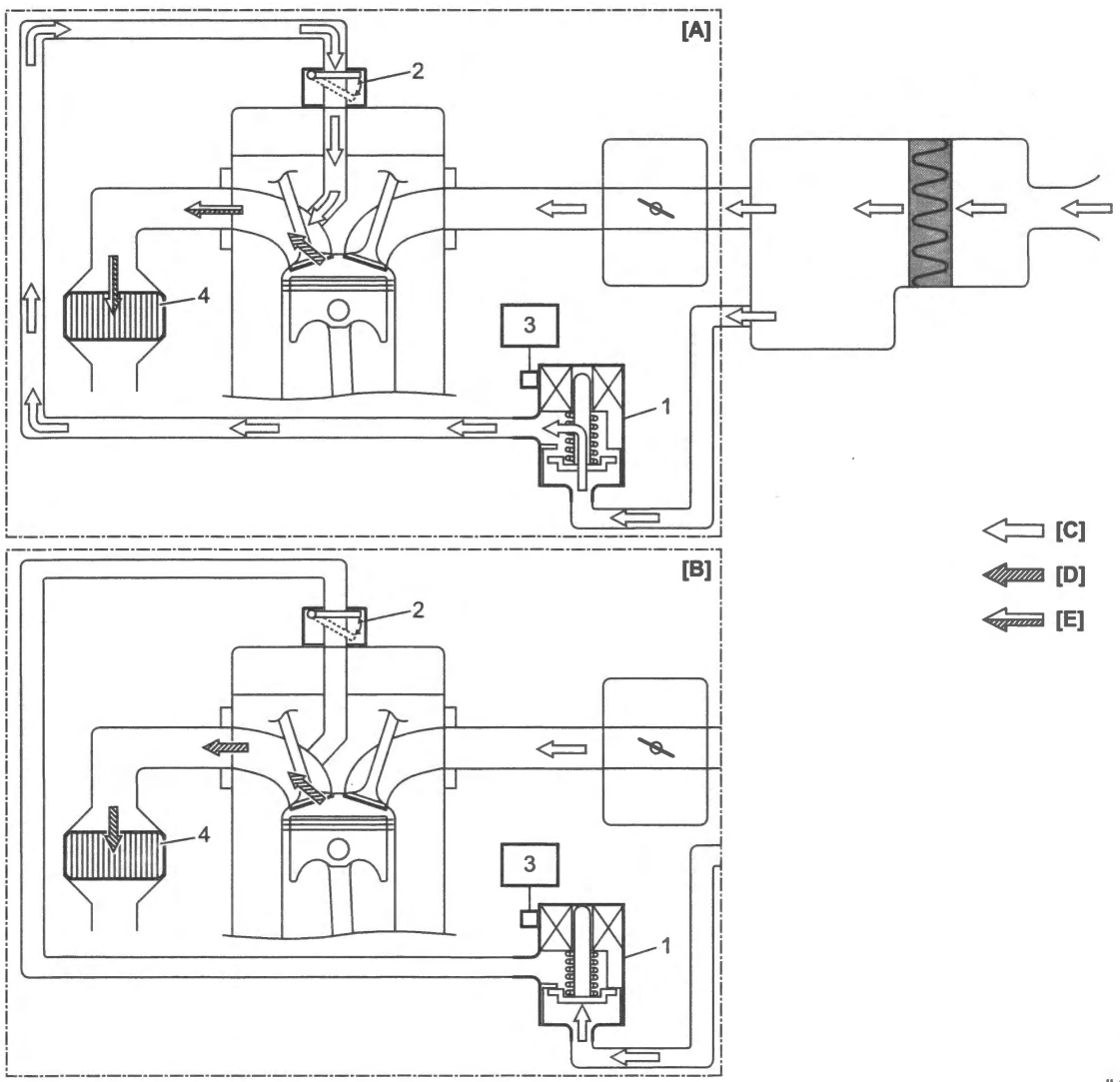

IL06L1012009-01

[A]: PAIR control solenoid valve is OFF (open)	[C]: Fresh air	[E]: Exhaust gas / Fresh air mixture
[B]: PAIR control solenoid valve is ON (close)	[D]: Exhaust gas	

Evaporative Emission Control System

BENL06L20121008

The evaporative emission control system is composed of the EVAP system.
The EVAP system restrains hydrocarbons namely HC vapors from emitting into the atmosphere. The HC vapors' pressure in the fuel tank (1) may rise affected by change of ambient temperature, barometric pressure or refueling, and the pressurized vapors are conducted into the EVAP canister (2) through the fuel shut-off valve (3) so as to maintain the tank pressure normal. Active carbon (4) in the EVAP canister absorbs the hydrocarbons and storing them.
The active carbon stores the hydrocarbons until the engine is able to consume them. When the EVAP system purge control solenoid valve (5) is turned ON by the ECM (6), fresh air flow into the EVAP canister due to negative intake pressure, then the HC vapors are pulled apart from the active carbon and sucked into the throttle body (7).

NOTE

- **When tank pressure is excessive high, the pressurized vapors are discharged into the atmosphere through the fuel relief valve (8) so as to maintain the tank pressure normal.**
- **When motorcycle is tipping over, the fuel shut-off valve prevents the fuel that may flow out to the EVAP line because check ball (9) shuts the EVAP line.**

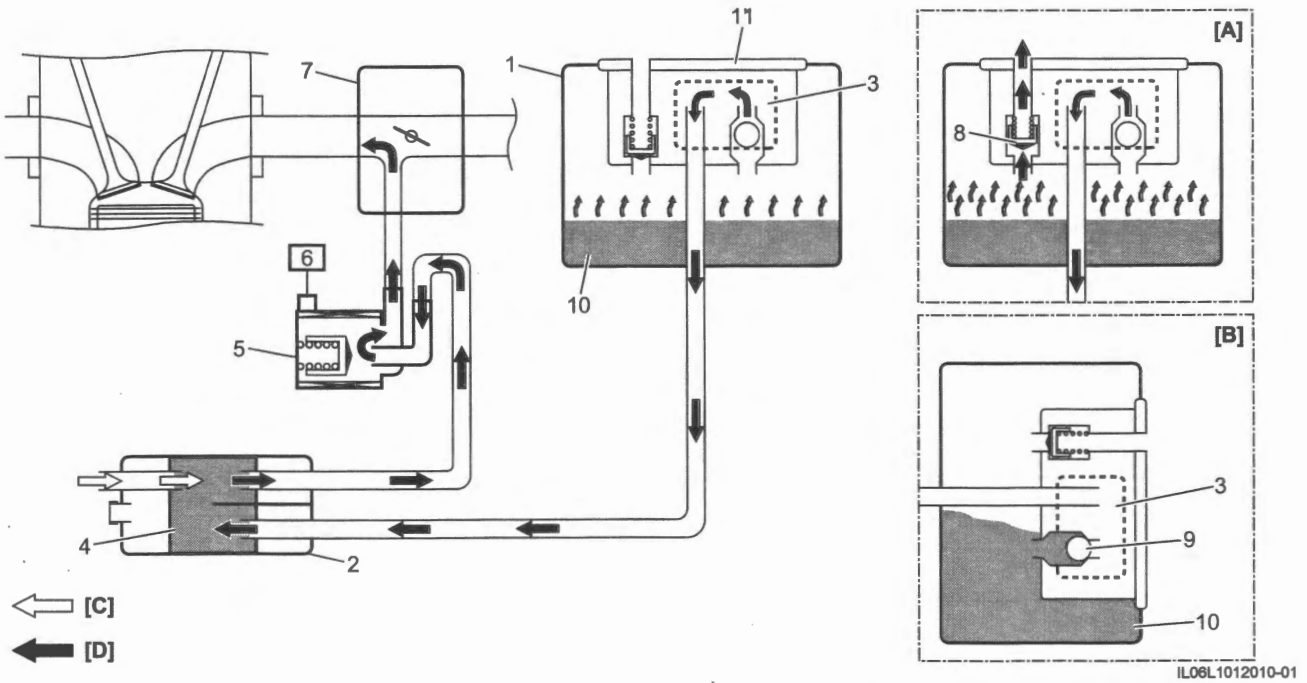

IL06L1012010-01

[A]: Tank pressure is excessive high.	[C]: Fresh air	10. Fuel
[B]: Motorcycle is tipping over.	[D]: Fuel vapor	11. Fuel tank cap

Fuel System Description

BENL06L20121009

Fuel System

The fuel delivery system consists of the fuel tank (1), fuel pump (2) (including fuel pressure regulator (3) and fuel filter (4)), fuel feed hose (5) and fuel injectors (6). There is no fuel return hose. The fuel in the fuel tank is pumped up by the fuel pump and pressurized fuel flows into the injectors installed on the throttle bodies. Fuel pressure is regulated by the fuel pressure regulator. As the fuel pressure applied to the fuel injectors is always kept at the specified level and the fuel is injected into the throttle bodies in conic dispersion when injector opens according to the injection signal from the ECM.

The fuel relieved by the fuel pressure regulator flows back to the fuel tank.

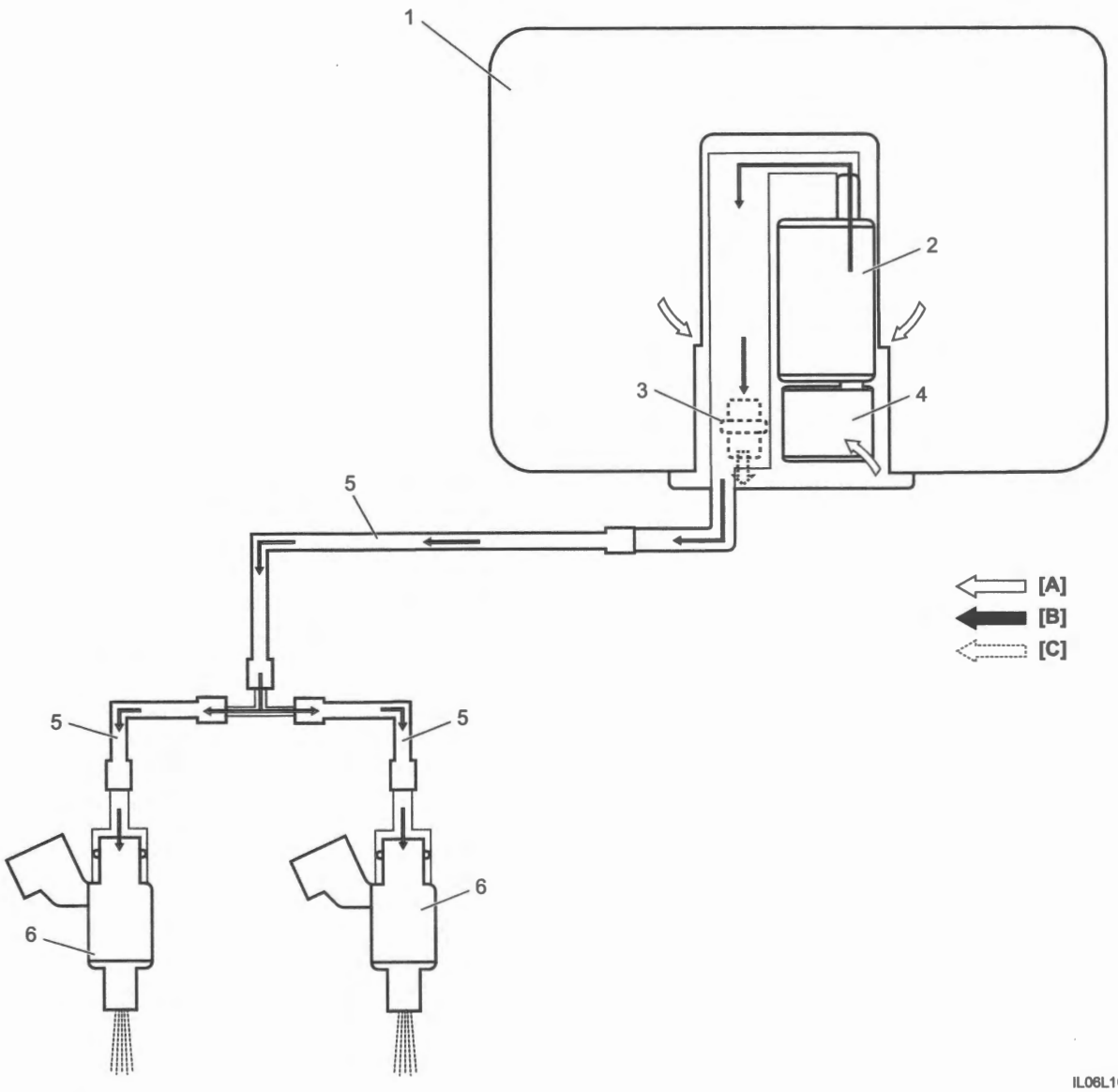

IL06L1012011-01

[A]: Before-pressurized fuel	[B]: Pressurized fuel	[C]: Relieved fuel

ABS (Without Motion Track Brake System)

BENL06L20121010

General Description

ABS control unit calculates signals from wheel speed sensors and transmits control signals to HU. HU controls braking force based on the control signals.

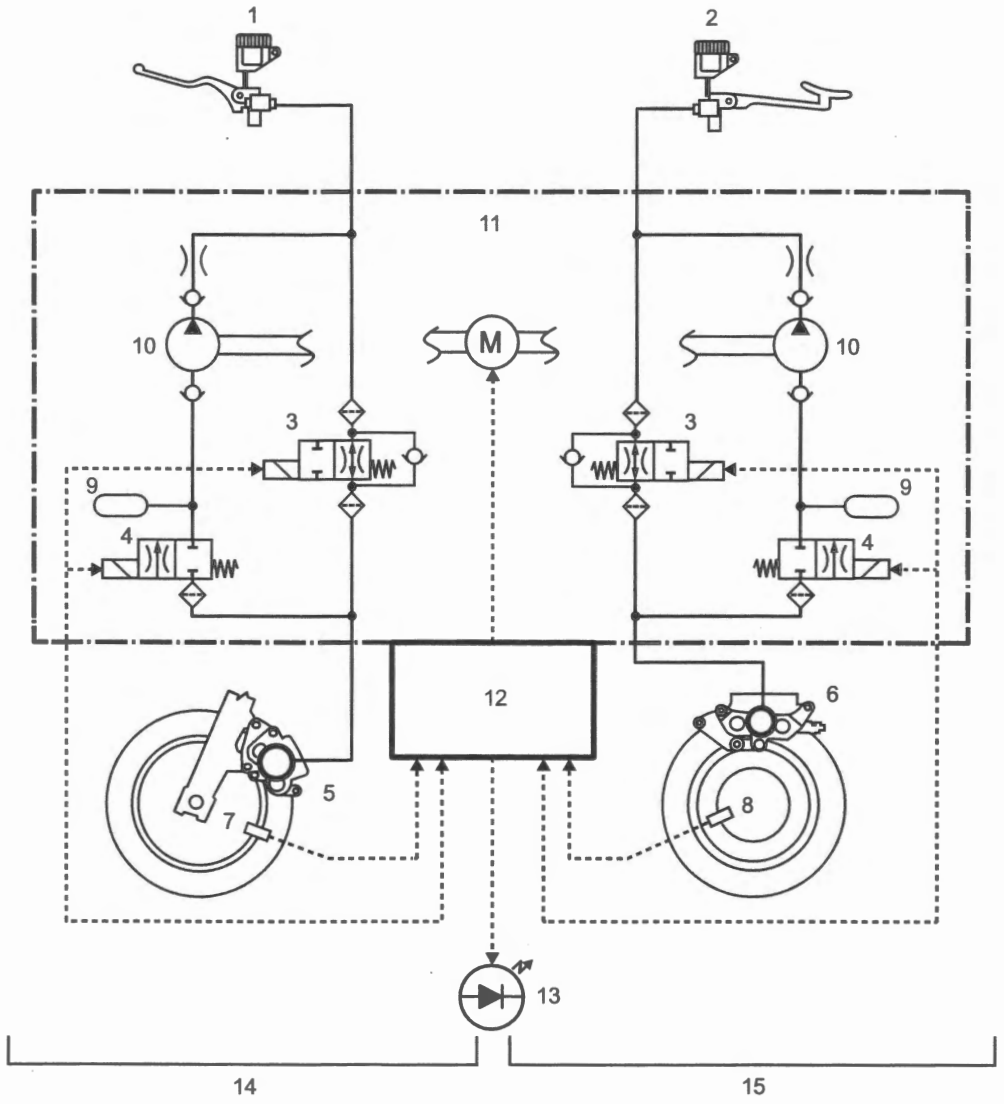

IL06L1012020-01

1. Front brake lever / master cylinder	6. Rear brake caliper	11. HU
2. Rear brake pedal / master cylinder	7. Front wheel speed sensor	12. ABS control unit
3. Inlet valve	8. Rear wheel speed sensor	13. ABS indicator light
4. Outlet valve	9. Accumulator	14. Front system
5. Front brake caliper	10. Suction return flow pump	15. Rear system

ABS Control Input / Output Table

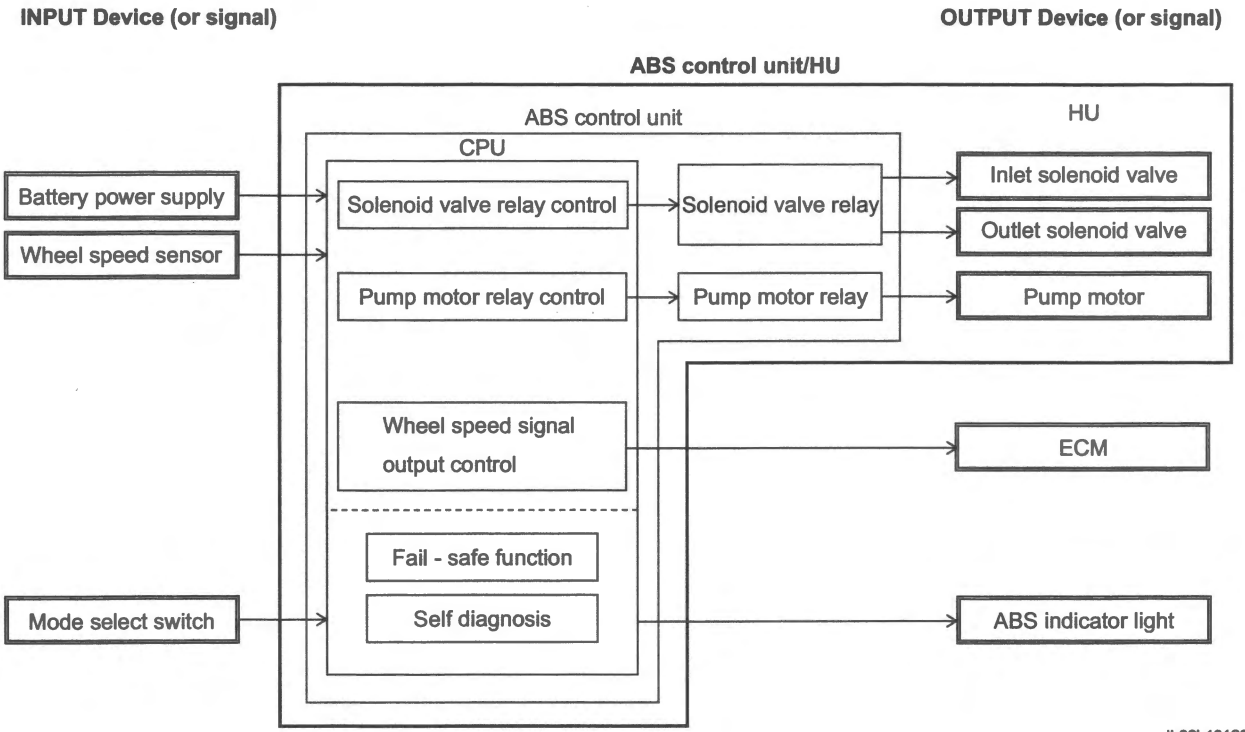

IL06L1012021-01

ABS (With Motion Track Brake System)

BENL06L20121011

General Description

- ABS control unit calculates signals from wheel speed sensors, pressure sensors, IMU and ECM. And transmits control signals to HU. HU controls braking force based on the control signals.
- ABS control unit / HU uses CAN communication to communicate with IMU, ECM and combination meter. For details of CAN communication system, referring to the "CAN Communication System Description": Technical Features (Page 0A-39).
- This ABS is equipped with the following function and systems.
  - ABS mode select function: ☞(Page 0A-24)
  - Motion track brake system: ☞(Page 0A-25)
  - Hill hold control system: ☞(Page 0A-26)
  - Slope dependent control system: ☞(Page 0A-28)
  - Load dependent control system: ☞(Page 0A-28)

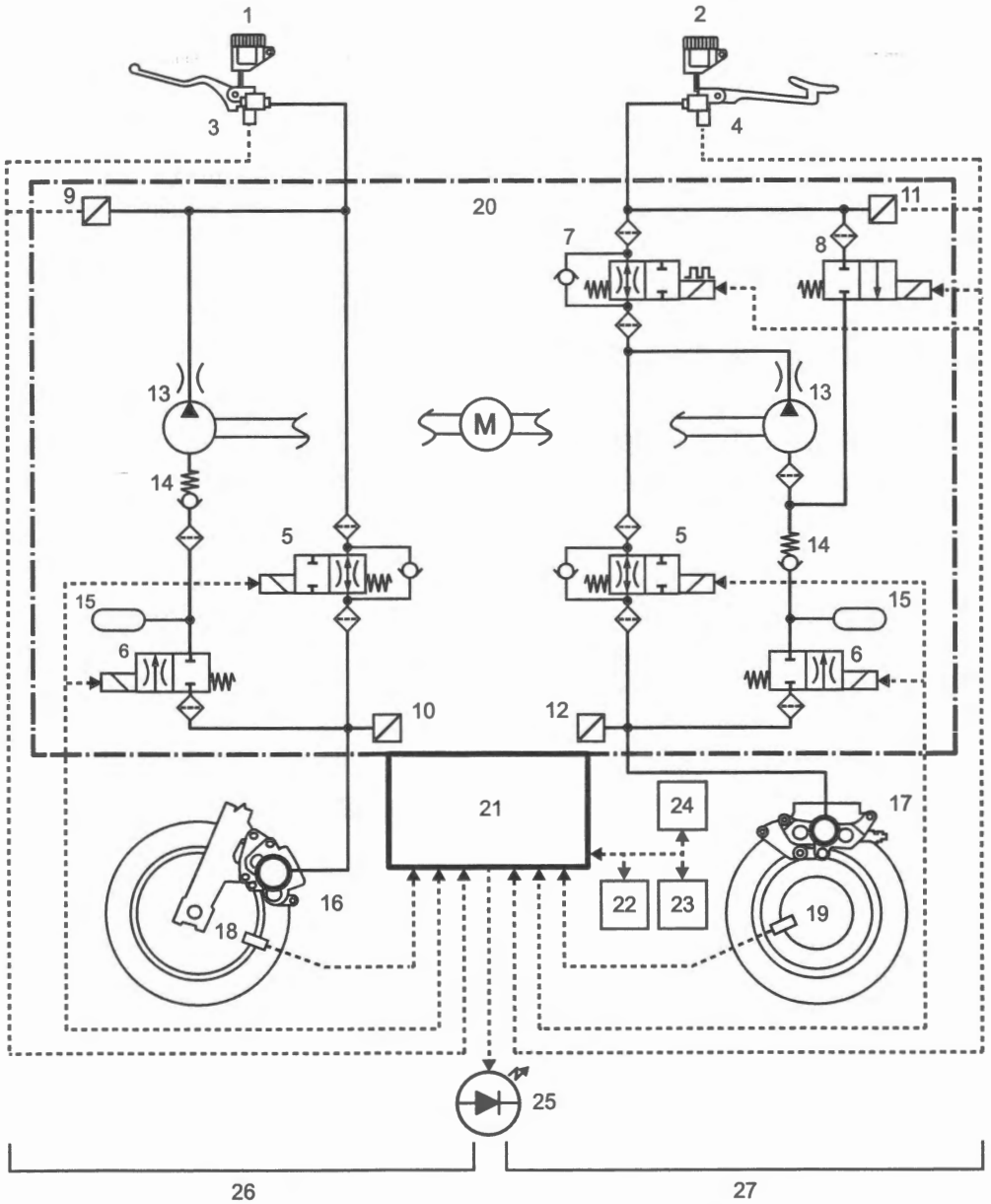

IL06L1012022-01

1. Brake lever / master cylinder	10. Front brake caliper pressure sensor	19. Rear wheel speed sensor
2. Brake pedal / master cylinder	11. Rear brake master cylinder pressure sensor	20. HU
3. Front brake switch	12. Rear brake caliper pressure sensor	21. ABS control unit
4. Rear brake switch	13. Suction return flow pump	22. IMU
5. Inlet valve	14. Check valve	23. ECM
6. Outlet valve	15. Accumulator	24. Combination meter
7. Switching valve	16. Front brake caliper	25. ABS indicator light
8. High pressure switch valve	17. Rear brake caliper	26. Front system
9. Front brake master cylinder pressure sensor	18. Front wheel speed sensor	27. Rear system

ABS Control Input / Output Table

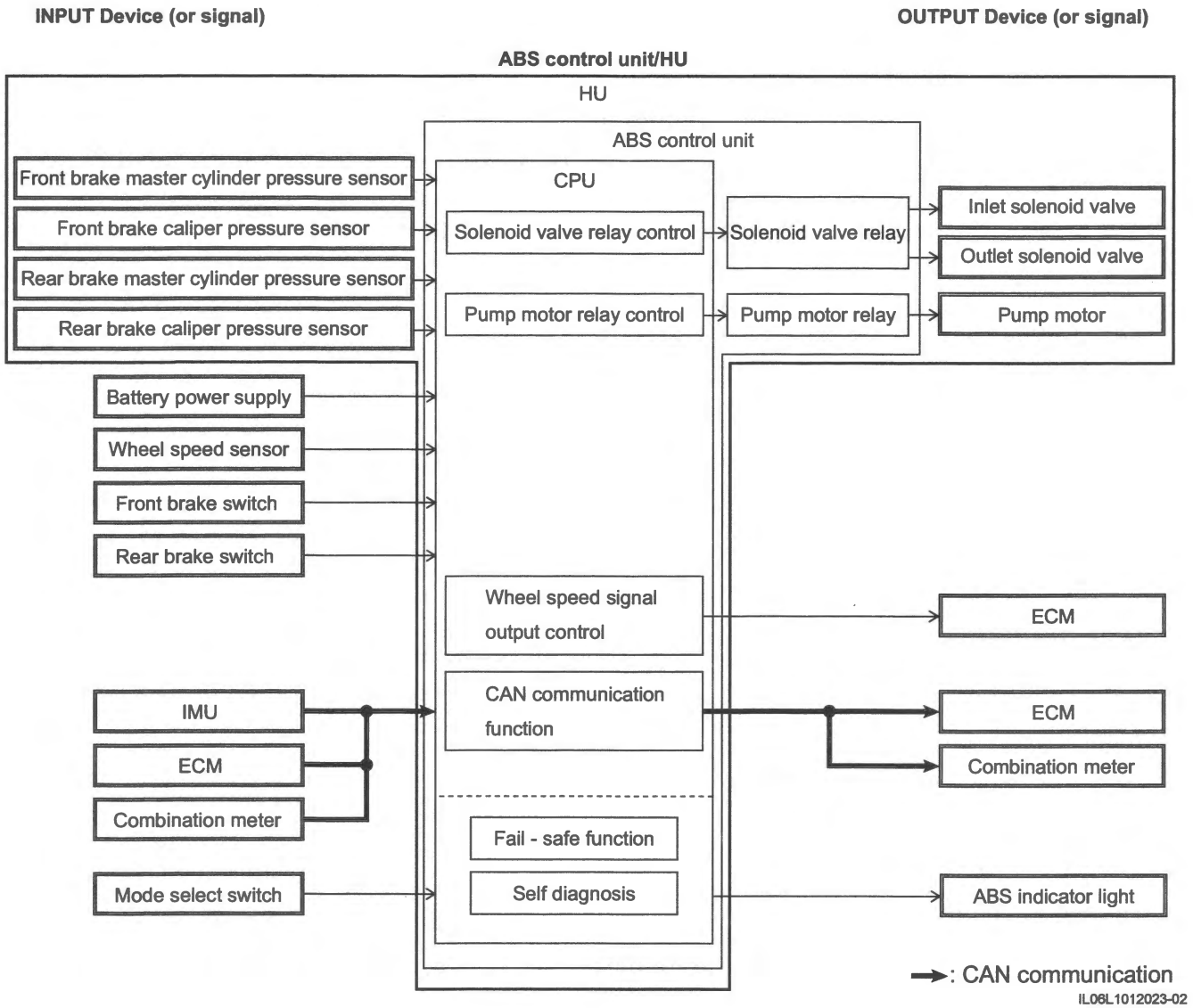

ABS Mode Select Function

The ABS mode levels can be selected by the mode switch (1) and select switch (2). There are 2 steps of ABS mode levels (from mode 1 to mode 2) and the higher figure has higher effect of the control.

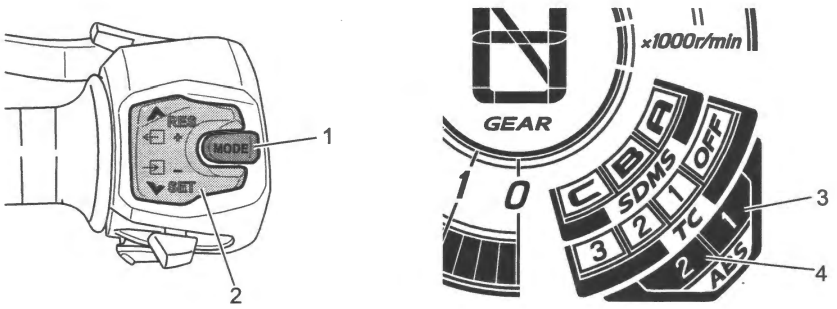

3. Mode 1 : Control with little ABS intervention	4. Mode 2 : Standard ABS control

IMU (With Motion Track Brake System)

BENL06L20121012

- IMU (1) is located under the front seat and at left side of ABS control unit / HU (2).
- IMU consists of 3-axis G sensor and 3-axis gyro sensor. These sensors detect the longitudinal acceleration, lateral acceleration, vertical acceleration, pitch rate, roll rate and yaw rate of the motorcycle, and transmit their signals to ABS control unit / HU through CAN communication.

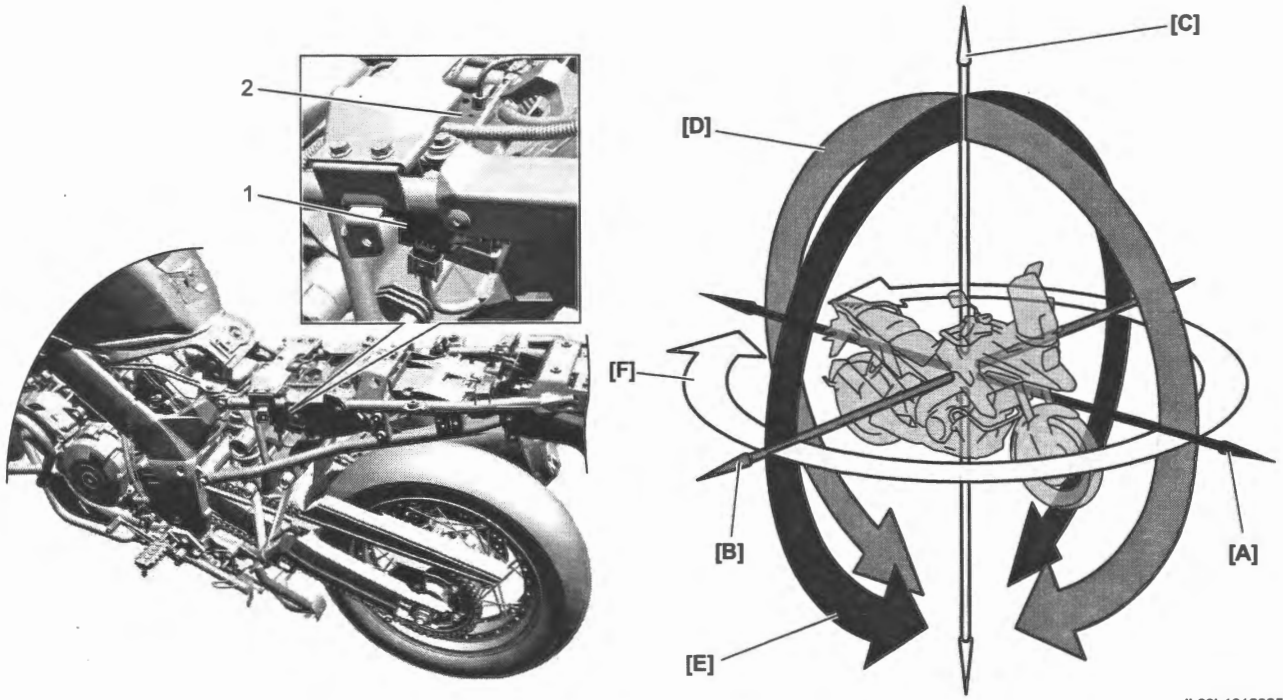

IL06L1012025-01

[A]: Longitudinal acceleration	[C]: Vertical acceleration	[E]: Roll rate
[B]: Lateral acceleration	[D]: Pitch rate	[F]: Yaw rate

Motion Track Brake System

BENL06L20121013

This system has a following control.

Combined brake control:

Combined Brake Control is linked control of the brakes on the front and rear wheels.
Even when the rider operates the brake lever and not the brake pedal, the ABS control unit/HU activates the pump motor and boosts the rear brake caliper pressure automatically. This improves deceleration of the motorcycle even when only the brake lever is operated. The ABS control unit / HU alters the braking distribution between the front and rear brakes according to the lean angle, with the proportion allocated to the rear braking decreasing as the lean angle increases.

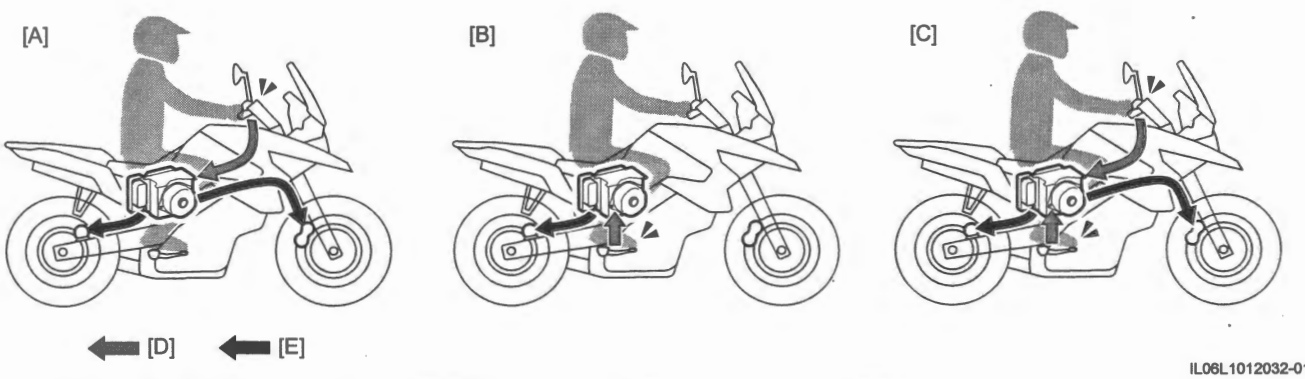

IL06L1012032-01

[A]: When only the front brake lever is operated	[D]: Brake input
[B]: When only the rear brake pedal is operated	[E]: Brake output
[C]: When the front brake lever and rear brake pedal is operated	

Cornering Brake Control:
Cornering Brake Control is control of the front and rear caliper pressure based on the amount of lean angle. The ABS control unit / HU utilizes internal solenoid valves, with the ABS beginning to operate as the lean angle increases and the wheel slip rate is small. This prevents wheel lock within defined parameters when the rider applies excessive braking during cornering.

Hill Hold Control System (With Motion Track Brake System)

BENL06L20121014

System Description

- This system is a function that prevents the motorcycle from moving backwards when starting after stopping on an uphill slope [A] and assists with pulling away smoothly.
- When the system operates, it controls the rear brake for about 30 seconds to prevent the motorcycle from moving backward without any operation of the brake lever or the brake pedal.
  About 3 seconds before the system is deactivated, the hill hold indicator starts blinking and the rear caliper pressure is gradually reduced accordingly until the system is fully deactivated.

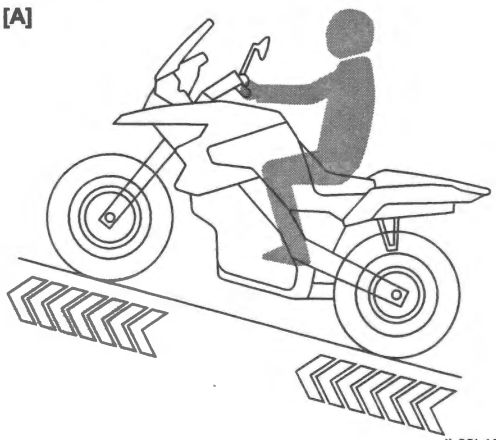

IL06L1012027-01

Effective Conditions for Control

If all of the following conditions are met, hill hold control system is in on-standby. And when brake lever and brake pedal are released, ABS control unit / HU controls the rear caliper pressure of rear brake for about 30 seconds.

NOTE

When hill hold control system is available, hill hold indicator is OFF, and when its system is operating, hill hold indicator is ON or blinks. For details of hill hold indicator, referring to "Hill Hold Indicator": Technical Features (Page 0A-27)

- "HILL HOLD SET" is "ON".

NOTE

The selected item is highlighted (1).

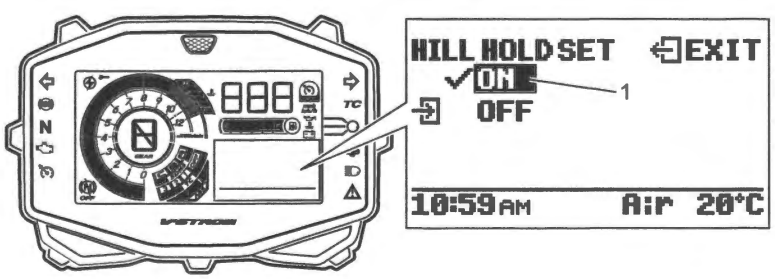

IL06L1012028-01

- Motorcycle stopped on an uphill slope.
- Brake lever and/or pedal are operated.
- Gear position is other than neutral.
- Side stand is retracted.
- No DTC related to the control is detected.

System Cancel Conditions

Hill hold control is canceled under one of the following conditions.

- Motorcycle is started.
- About 30 seconds elapses after the brake lever and brake pedal are released.
- Brake lever is grasped 2 times quickly.
- Gear position is neutral.
- Side stand on the ground.

Hill Hold Indicator

NOTE

When DTC related to the control is detected, the "HILL!" (6) is indicated by the display of the LCD.

Hill Hold Control System Conditions		Hill Hold Indicator (1)
"HILL HOLD SET" is "OFF" (7).		ON (2) ("OFF" display)
DTC related to the control is detected.		
"HILL HOLD SET" is "ON" (8).		OFF (3)
Hill hold control system is in on-standby.		
Hill hold control system is operating.	After the brake lever and brake pedal are released.	ON for about 27 seconds (4)
	Before rear caliper pressure reduces.	Blinks for about 3 seconds (5)

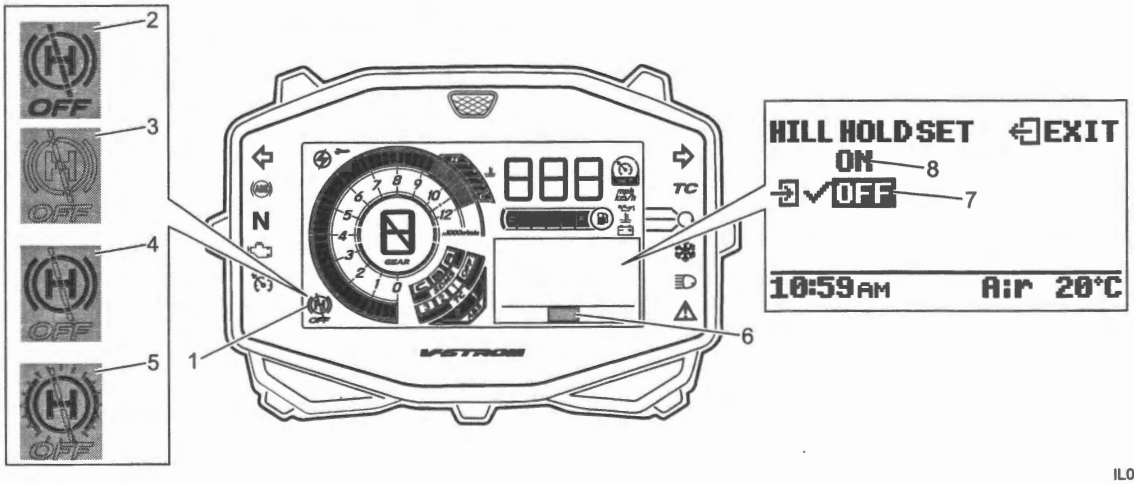

IL06L1012029-01

Slope Dependent Control System (With Motion Track Brake System)

BENL06L20121015

This system controls front and rear caliper pressure to restrain rear wheel lift up, when operating the brake lever and/or brake pedal in a downhill slope [A].

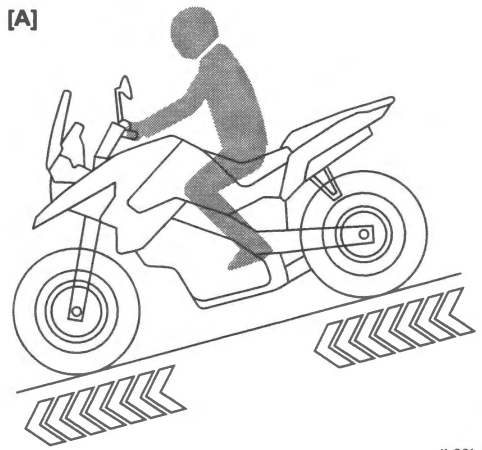

IL08L1012030-01

Load Dependent Control System (With Motion Track Brake System)

BENL06L20121016

System Description

- This system controls rear caliper pressure to do the suitable braking force on the load conditions, when the brake lever is operated.
- The control value of the load is the value that ABS control unit / HU learned.

Description of Load Value Learning

If all of the following conditions are met, ABS control unit / HU learns load value.

- Ignition switch is ON.
- Gear position is 3rd, 4th, 5th and 6th.
- Motorcycle is running at 36 km/h (22 mile/h) or higher vehicle speed.
- ABS is not operating.

NOTE

When ignition switch is turned "ON" again, the learned value reset from ABS control unit / HU.

Wheel Speed Sensor Description

BENL06L20121017

The wheel speed is detected by the wheel speed sensor (1) and sensor ring (2). The wheel speed sensor is fixed to the body. As the sensor ring is located on the wheel hub, it turns along with the wheel. The wheel speed sensor feeds pulse signals in proportion to the wheel speed to ABS control unit, which then calculates the wheel speed based on such signal information.

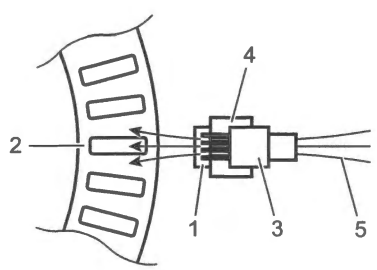

IJ31J1452008-02

4. Magnet	5. Magnetic field lines

Combination Meter System Description

BENL06L20121018

- This combination meter mainly consists of the LCD (Liquid Crystal Display) and LED (Light Emitting Diode).
- Combination meter uses signals (information) sent from each control module by CAN communication to ECM and ABS control unit. For more information on CAN communication data received by combination meter, refer to "CAN Communication System Description": Technical Features (Page 0A-39).

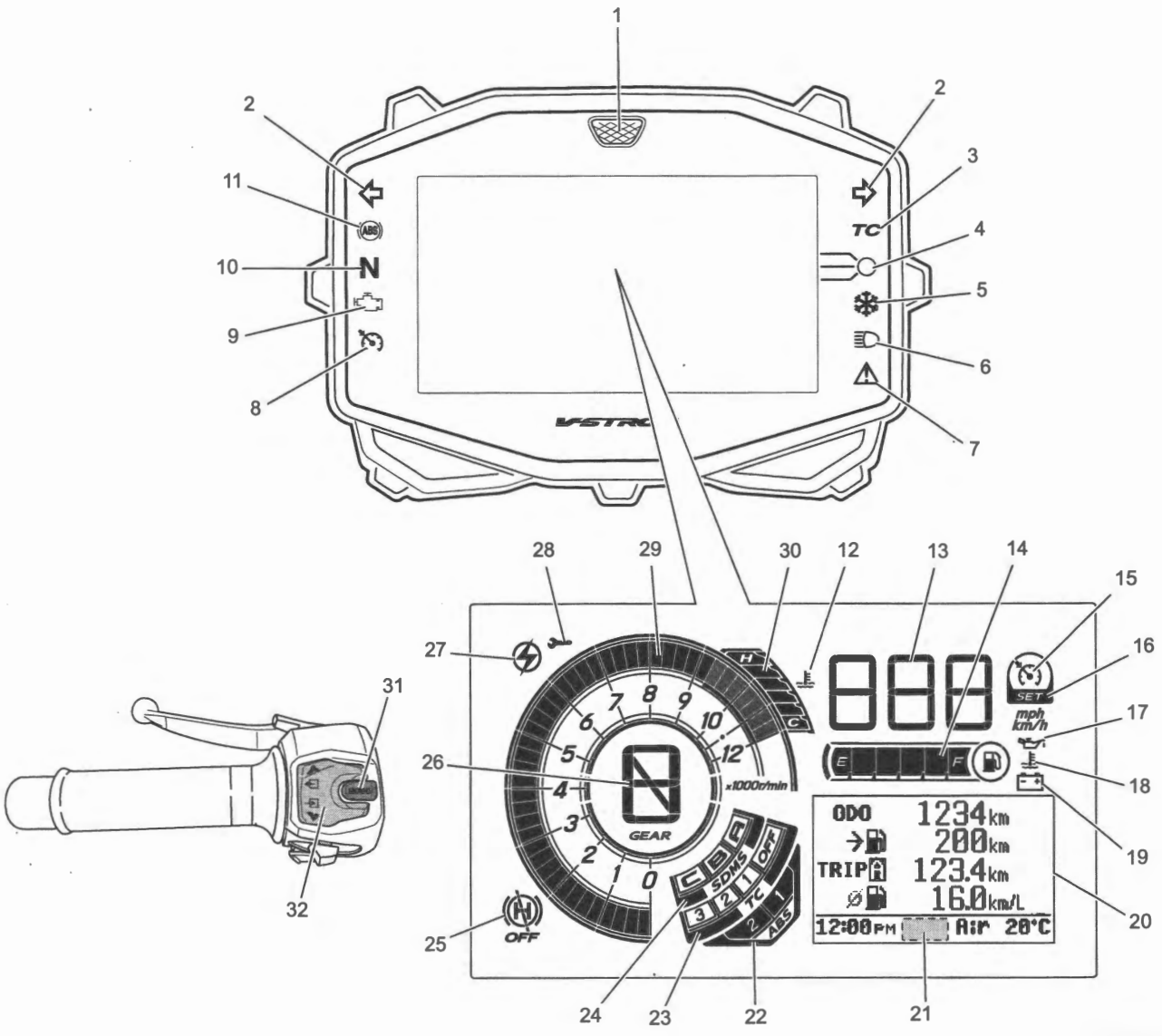

IL06L1012031-01

1. Engine rpm indicator light	12. Engine coolant temperature indicator	23. Traction control system indicator
2. Turn signal indicator light	13. Speedometer	24. SUZUKI DRIVE MODE SELECTOR (SDMS) indicator
3. Traction control indicator light (If equipped)	14. Fuel level indicator	25. Hill hold indicator (If equipped)
4. Warning indicator light (Oil pressure / Engine coolant temperature / Battery voltage)	15. Cruise control indicator (If equipped)	26. Gear position indicator
5. Freeze indicator light	16. SET indicator (If equipped)	27. Engine rpm indicator
6. Hi beam indicator light	17. Oil pressure indicator	28. Service reminder indicator
7. Master warning indicator light	18. Engine coolant temperature indicator symbol	29. Tachometer
8. Cruise control indicator light (If equipped)	19. Battery voltage warning indicator	30. Engine coolant temperature indicator
9. Malfunction indicator light	20. Multifunction display (Odometer / Driving range/ Trip meter A / Trip meter B / Instantaneous fuel consumption / Average fuel consumption / Clock / ambient air temperature / Brightness of multifunction display / DTC / CHEC / FI / Battery voltage meter)	31. Mode switch
10. Neutral indicator light	21. Self-diagnosis display part	32. Select switch
11. ABS indicator light (If equipped)	22. ABS mode indicator (If equipped)	

Combination Meter Display Table

Display	Display indication	Function
Engine rpm indicator light	LED	When engine speed reaches the set value, the engine RPM indicator light comes on or blinks to indicate when to change gears up.
Turn signal indicator light	LED	Operating the right or left turn signal causes the turn signal indicator to blink
Traction control indicator light	LED	The traction control indicator light "TC" blinks when the traction control system is controlling engine power output.
Engine coolant temperature / oil pressure / battery voltage warning indicator light	LED	The indicators come on when the following malfunctions occur. • Coolant temperature exceeds 120°C • Engine oil pressure drops • Low battery voltage
Freeze indicator light	LED	The freeze indicator light starts blinking when the ambient temperature falls below 3°C (38°F).
Hi beam indicator light	LED	This blue indicator light will be lit when the headlight high beam is turned on.
Master warning indicator light	LED	The indicators come on when the following malfunctions occur. • Ambient air temperature sensor malfunction • Handle switch malfunction • ABS control unit malfunction • ECM malfunction
Cruise control indicator light (If equipped)	LED	The indicator light comes on when the cruise control system is on.
Malfunction indicator light	LED	The indicator light comes on or blink when the fuel injection system malfunction.
Neutral indicator light	LED	The green indicator light will come on when the transmission is in neutral.
ABS indicator light	LED	• This indicator normally comes on when the ignition switch is turned "ON" and goes off after the motorcycle speed exceeds 5 km/h (3 mph). • If there is a problem with the ABS (Antilock Brake System), this indicator light comes on. The ABS does not operate when the ABS indicator light is on.
Engine coolant temperature indicator	LCD (Segment)	The indicator blinks when the following malfunctions occur. • Coolant temperature exceeds 120°C
Speedometer	LCD (Segment)	The speedometer indicates the road speed in miles per hour or kilometers per hour.

Display	Display indication	Function
Fuel level indicator	LCD (Segment)	The fuel level indicator indicates the amount of fuel remaining in the fuel tank. • The fuel level indicator displays all 6 segments when the fuel tank is full. • The fuel mark blinks when the fuel level drops below approx. 4.4 L (4.6/3.9 US/Imp qt). • The fuel mark and segment blink when the fuel drops below approx. 1.4 L (1.5/1.2 US/Imp qt).
Cruise control indicator (If equipped)	LCD (Segment)	The indicator displays current cruise control system conditions (OFF, stand by, operating)
SET indicator (If equipped)	LCD (Segment)	The indicators come on when the cruise control system is operating.
Symbol (Oil pressure indicator)	LCD (Segment)	When the ignition switch is turned on, the indicator come on, and normally, will turn off when the engine starts. The indicator comes on when the following malfunctions occur. • Engine oil pressure drops
Symbol (Engine coolant temperature indicator)	LCD (Segment)	The indicator comes on when the following malfunctions occur. • Coolant temperature exceeds 120°C
Symbol (Battery voltage warning indicator)	LCD (Segment)	The indicator comes on when the following malfunctions occur. • Low battery voltage
Odometer	LCD (Dot matrix)	The odometer registers the total distance that the motorcycle has been ridden.
Driving range meter	LCD (Dot matrix)	The driving range meter displays estimated driving range (distance) based on the remaining fuel within the range from 1 to 999 km (mile).
Trip meter A / B	LCD (Dot matrix)	• After resetting, the distance traveled is displayed in km. • There are 2 modes, TRIP A, and TRIP B.
Instantaneous fuel consumption	LCD (Dot matrix)	The instantaneous fuel consumption meter indicates the instantaneous fuel consumption while running.
Average fuel consumption	LCD (Dot matrix)	Displays the fuel consumption for distance traveled for both TRIP A and TRIP B. Displays are in the following ranges.
Clock	LCD (Dot matrix)	The time is displayed using a 12-hour, AM/PM system.
Ambient air temperature indicator	LCD (Dot matrix)	The indicator always indicates the ambient temperature.
Instrument panel light brightness	LCD (Dot matrix)	Set the meter to instrument panel light brightness. Pushing the SELECT switch (Up) will change the instrument panel light brightness in 6 steps. The brightness indicator indicates brightness in 6 steps.

Display		Display indication	Function
Self-diagnosis display part	"CHEC"	LCD (Dot matrix)	When the malfunction of CAN communication system, "CHEC" is displayed.
	"- - -"		When the combination meter does not receive any CAN communication signal, "- - -" is displayed.
	"FI"		When the ECM detects a malfunction of engine control system, "FI" is displayed.
	"HILL"		When the ABS control unit / HU detects a malfunction of hill hold control function, "HILL" is displayed.
	"TO!"		"TO!" is displayed, any of the following conditions. • When the motorcycle is tipping over. • When the ECM detects a malfunction of TO sensor circuit.
	"SW!"		When the combination meter detects a malfunction of handle switch, "SW!" is displayed.
	"Air!"		When the combination meter detects a malfunction of ambient air temp sensor, "Air!" is displayed.
	Figure of key mark		Figure of key mark is displayed, any of the following conditions. • When the ECM detects a malfunction of ignition switch. (without immobilizer control system) • When the key IDs do not agree. (with immobilizer control system)
	C code		The memorized malfunction code of ECM is indicated. (Self-Diagnosis Function) in Section 1A
Voltmeter		LCD (Dot matrix)	The voltmeter displays the battery voltage within the range of 10.0 to 16.0V.
ABS mode select indicator (If equipped)		LCD (Segment)	The ABS mode select indicator displays current ABS mode (1, 2).
Traction control system indicator		LCD (Segment)	The traction control system indicator displays current traction control mode (1, 2, 3, OFF).
SDMS indicator		LCD (Segment)	The SDMS indicator displays current driving mode (A, B, C).
Hill hold indicator (If equipped)		LCD (Segment)	The indicator displays current hill hold system conditions (OFF, stand by, operating)
Gear position indicator		LCD (Segment)	The gear position indicator indicates gear position. This indicator displays "N" when the transmission is in neutral.
Engine rpm indicator		LCD (Segment)	When the set engine speed is reached, the engine rpm indicator lights come on or blink. To set the engine speed, take the following steps.
Service reminder indicator		LCD (Segment)	You can be reminded when the next service is due by setting the date and distance. When the set date or distance has been reached, the service reminder indicator comes on.
Tachometer		LCD (Segment)	The tachometer indicates the engine speed in revolutions per minute (r/min).
Engine coolant temperature indicator		LCD (Segment)	The engine coolant temperature is displayed by 6 segments.

Service Reminder Indicator Description

BENL06L20121019

When the set date or distance for the service maintenance has been reached, the service reminder indicator (1) comes on and multifunction display (2) indicates.

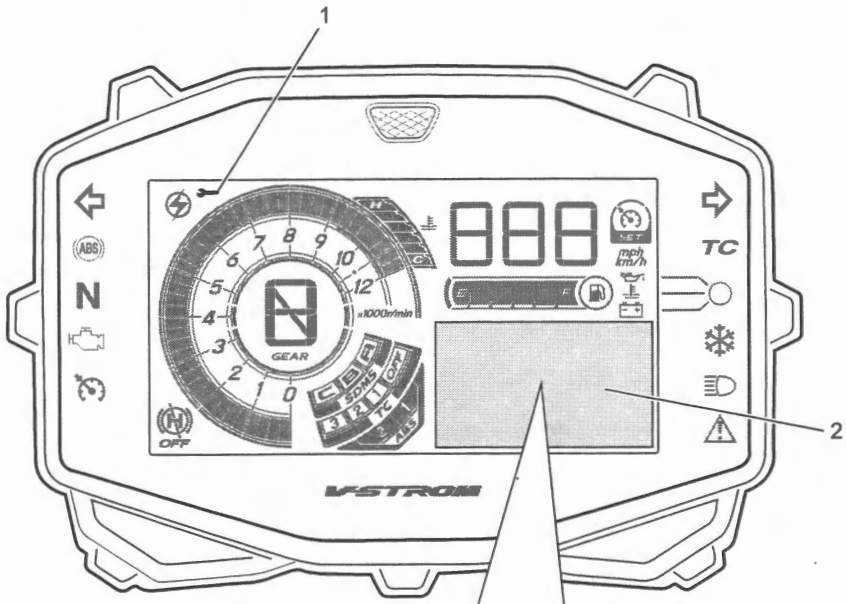

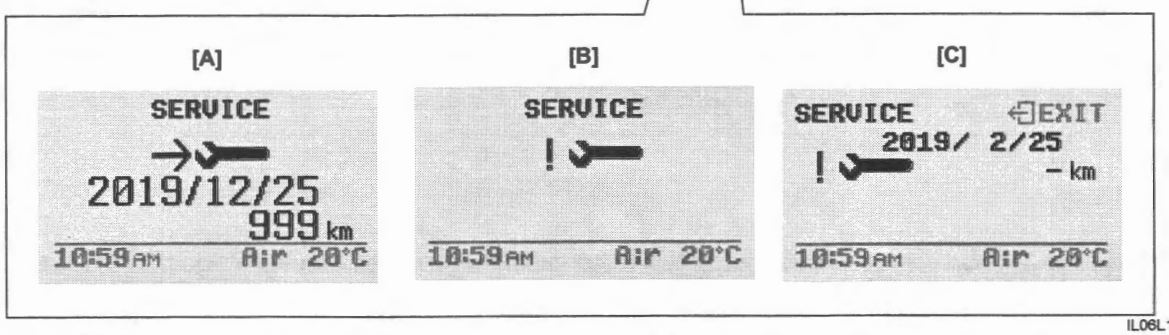

IL06L1012033-01

[A]: If 1 month or 1000 km (600 mile) remains before the set date or distance, advance notice of the service interval (inspection date, remaining distance) is indicated when the ignition switch is turned ON.	[C]: When you select the function "Service", notice is indicated that the service interval has been reached.
[B]: The ignition switch is turned ON, after the set date or distance has been reached.	

The service reminder is set using the mode select switch (special tool), monitoring the multifunction display and pushing the select switch in the left handle switch (UP or DOWN) (2) for the setting.

Special tool
(A): 09930–83130

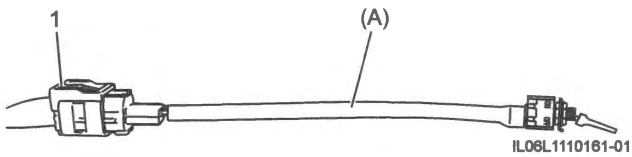

IL08L1110161-01

1. Mode select coupler (6P)

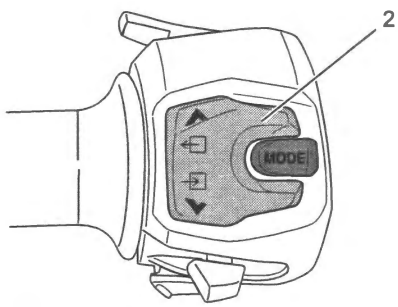



IL08L1012035-01

For details of service reminder setting, referring to "Service Reminder Reset" in Section 9C (Page 9C-10).

Cruise Control System Description (If Equipped)

BENL06L20121020

System Description

- Cruise control system is a device which maintains a preset vehicle speed while driving at a high speed, e.g. on a highway. It allows the driver to drive at a constant speed of approximately 50 km/h (31 mile/h) to 160 km/h (99 mile/h)* without opening the throttle grip.
- The system mainly consists of ECM, throttle body, cruise control switch, select switch ("RES / UP" and "SET / DOWN"), mode switch, throttle grip assembly (incorporating cruise control cancel switch) and combination meter.
- ECM performs control of the cruise control system. ECM controls throttle valve opening to keep actual vehicle speed at set (target) speed.

*: 35 kW version is approximately 50 km/h (31 mile/h) to 130 km/h (81 mile/h).

Effective Conditions for Control

If all of the following conditions are met, it is possible to set the cruise control system.

- Cruise control switch (1) is ON state. (Cruise control system is in on-standby. Refer to "Cruise Control Indicator / Cruise Control Indicator Light": Technical Features (Page 0A-37).

NOTE

Cruise control switch has a momentary contact type button. When ignition switch is turned "ON" again, the system comes OFF (cruise control indicator and cruise control indicator light are OFF).

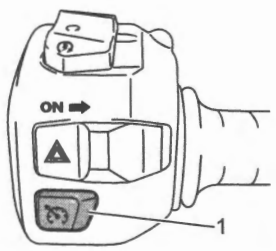

IL06L1012012-01

- Motorcycle is running at approximately 50 km/h (31 mile/h) to 160 km/h (99 mile/h)*.
- Gear position is 4th, 5th or 6th.
- Clutch lever is released.
- Brake lever and pedal are released.
- Rear wheel does not wheel spin.
- No DTC related to the control is detected.

*: 35 kW version is approximately 50 km/h (31 mile/h) to 120 km/h (75 mile/h).

Speed Set Function

When "SET / DOWN" switch (1) is pressed in execution state of the control, the speed obtained when the switch is pressed is stored as a set speed and the cruise control system starts control.

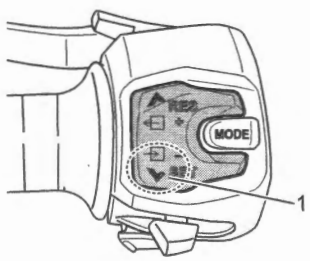

IL06L1012013-03

Acceleration / Deceleration Function

- When "RES / UP" switch (1) is pushed momentarily, the vehicle speed is set to approximately 1km/h (0.6 mile/h) high.
  When the switch is pushed for a long time, acceleration continues for pushing the switch. And when the switch is released, the vehicle speed is set.
- When "SET / DOWN" switch (2) is pushed momentarily, the vehicle speed is set to approximately 1km/h (0.6 mile/h) low.
  When the switch is pushed for a long time, deceleration continues for pushing the switch. And when the switch is released, the vehicle speed is set.

NOTE

When control of the cruise control system, the vehicle speed can be accelerated by opening the throttle grip. And when the throttle grip released, decelerate and keep the vehicle speed according to the set speed by ECM.

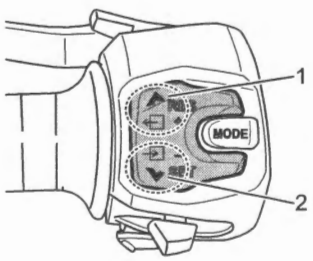

IL08L1012014-03

Cancel / Resume Function

- When throttle grip is turned adversely under the control of the cruise control system, the control is canceled and the system becomes in a state of on-standby.

NOTE

Throttle grip assembly has a cruise control cancel switch function. Refer to "Electric Throttle Control System Description": Technical Features (Page 0A-13).

- When the cruise control is in on-standby state by cancel operation while the motorcycle is running at approximately 50 km/h (31 mile/h) or higher speed, pressing "RES / UP" switch (1) allows the system to resume motorcycle running at the speed set before the control is canceled.

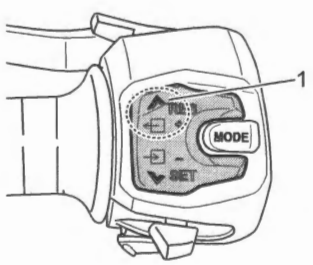

IL08L1012015-03

- Cruise control is canceled under one of the following conditions.

Conditions	Resume Function
Throttle grip is turned adversely.	Available
Gear position is 1st, 2nd, 3rd and neutral.	Available
Clutch lever is grasped.	Available
Brake lever is grasped or brake pedal is depressed.	Available
Cruise control switch is turned OFF.	Not available
Mode switch is pushed.	Not available
Motorcycle is running at lower than approximately 50 km/h (31 mile/h)	Not available
Rear wheel is wheel spin.	Available
The actual vehicle speed does not reach target vehicle speed for specified time.	Available
DTC related to the control of the cruise control system is detected.	Not available

Cruise Control Indicator / Cruise Control Indicator Light

Cruise Control System Conditions	Cruise Control Indicator (1)	Cruise Control Indicator Light (2)
Cruise control system is OFF.	OFF (3)	OFF
Cruise control is in on-standby.	ON (on-standby) (4)	ON
Push the "SET / DOWN" switch or "RES / UP" switch. (When cruise control system is in on-standby.)	—	Blinks for about 3 seconds
Cruise control is in set.	ON (set) (5)	ON
When the cruise control cannot be set, operate the each switch of cruise control system.	Blinks	—

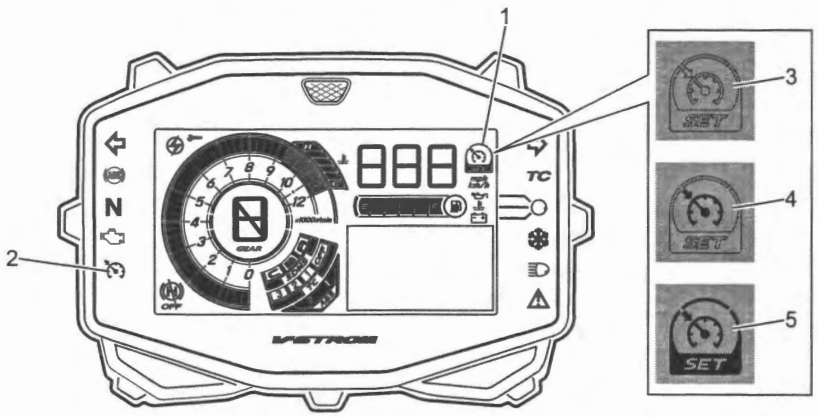

IL06L1012016-01

Immobilizer Control System Description (If Equipped)

BENL06L20121021

System Description

- The immobilizer control system verifies that the key ID of transponder agrees with key ID already registered in ECM by means of radio communication through the immobilizer antenna. When the ID agreement is verified, the system makes the engine ready to start.
- The ignition key incorporates the transponder which stored key ID.

Operation Description

Operation procedure of immobilizer control system is as follows.

1) When the ignition switch is turned ON, the immobilizer antenna (1) and ECM (2) are powered ON.
2) The ECM transmits a signal (3) to the transponder (4) through the immobilizer antenna.
3) With the signal received, the transponder transmits the key ID signal (5) to the ECM through the immobilizer antenna.
4) ECM compares this key ID with the key ID that has already been registered in ECM.
   - If both key IDs agree, the ECM makes the engine ready to start. At the same time, ECM activates the indicator light (6) of immobilizer antenna.
   - If both key IDs do not agree, ECM causes fuel pump, fuel injection and ignition coil to be suspended. At the same time, ECM activates the indicator light of immobilizer antenna.

NOTE

For details of indicator light, referring to "Indicator Light Description": Technical Features (Page 0A-39).

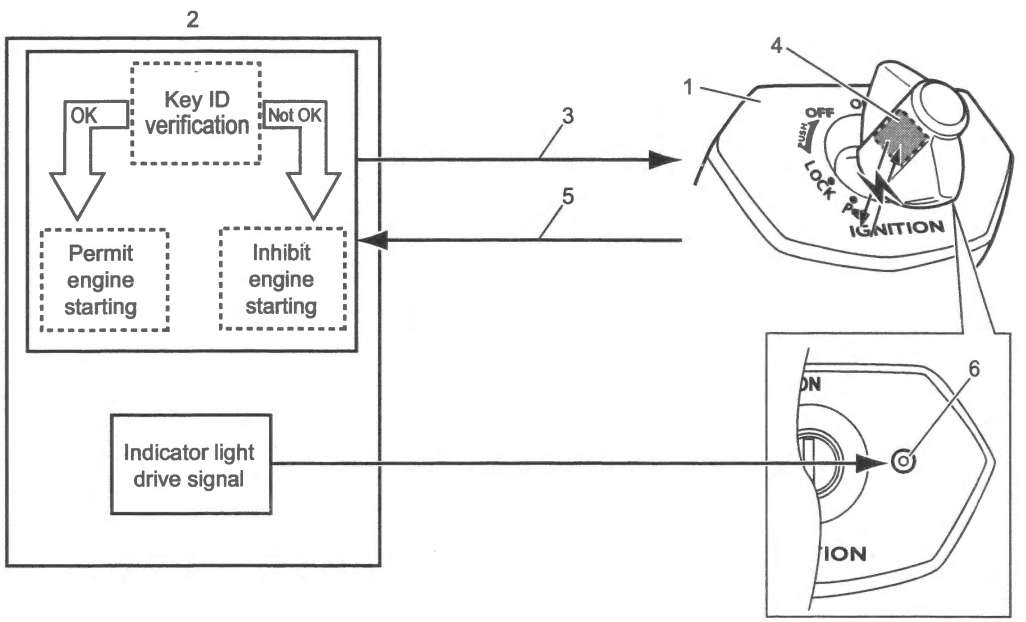

IL06L1012017-01

Indicator Light Description

When the ignition switch is turned ON, the indicator light (1) flashes as many as the number of key IDs registered in ECM. Thereafter, if the key IDs are in agreement, the indicator light turns on for two seconds to notify of completion in successful communication.

If the indicator light flashes fast, it notifies of communication error or disagreement of key ID.

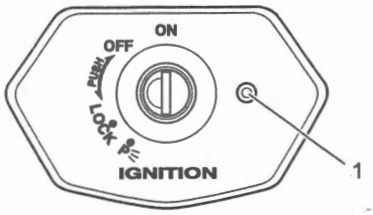

IE31J1180004-01

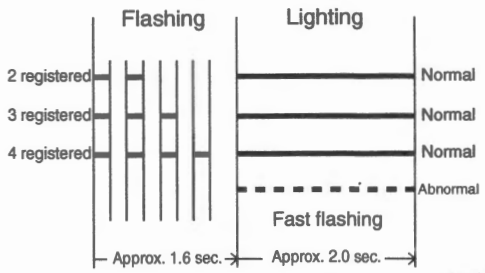

I705H1180006-01

CAN Communication System Description

BENL06L20121022

System Description

- Communication between each control module and device is established through continuous input / output of ON/ OFF digital signals to exchange various data items. Transmitting / receiving these data is called as serial communication interface. Types of serial communication interface with protocols (communication standards) such as UART, CAN and LIN have been adopted for in-vehicle communication system.
- In this motorcycle, the following control devices transmit / receive data through a twist pair of two communication lines (CAN High (1) and CAN Low (2)) connected through CAN communication. Data obtained by a specific control module can be shared with every control module. Communication speed of CAN system is fast and the system is suitable for high-speed control data processing by ECM etc.
  - ECM (3)
  - Combination meter (4)
  - ABS control unit / HU (5) (With motion track brake system)
  - IMU (6) (With motion track brake system)

NOTE

The SDS-II communicates with ECM by CAN communication.

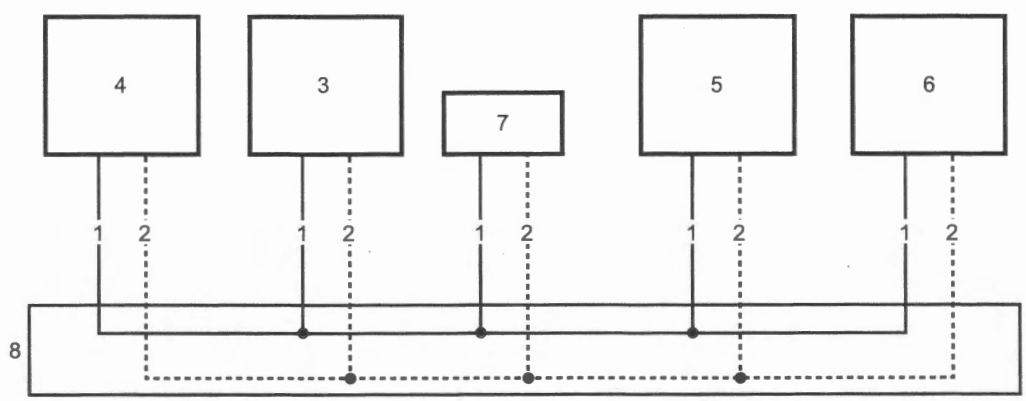

IL06L1012018-01

7. Mode select coupler (6P)	8. J/C

CAN Communication Signal

CAN communication is established as shown below with 2.5 V as the reference level for both CAN High signal (1) and CAN Low signal (2). The range of CAN High signal is from 2.5 V to about 3.5 V and that of CAN Low signal is from 2.5 V to about 1.5 V. When both are at 2.5 V, signal is judged as OFF. When CAN High signal is 3.5 V and CAN Low signal is 1.5 V (that is, when the difference between High voltage and Low voltage is more than about 2 V), signal is judged as ON. For this reason, a feature of CAN communication signal is that the signal waveform between CAN High and CAN Low signals is symmetrical with respect to 2.5 V level. CAN communication fails when the symmetrical signal form collapses.

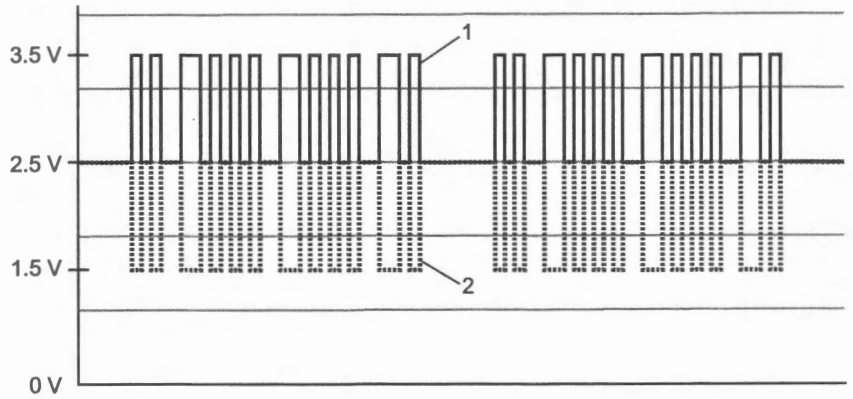

IL06L1012019-01

Maintenance and Lubrication

Precautions

Precautions for Maintenance

BENL06L20200001

The "Periodic Maintenance Schedule Chart" lists the recommended intervals for all the required periodic service work necessary to keep the motorcycle operating at peak performance and economy. Maintenance intervals are expressed in terms of kilometers, miles and months for your convenience.

IMPORTANT: The periodic maintenance intervals and service requirements have been established in accordance with EPA regulations. Following these instructions will ensure that the motorcycle will not exceed emission standards and it will also ensure the reliability and performance of the motorcycle.

NOTE

More frequent servicing may be required on motorcycles that are used under severe conditions.

Scheduled Maintenance

Periodic Maintenance Schedule Chart

BENL06L20205001

NOTE

- **I = Inspect and clean, adjust, replace or lubricate as necessary.**
  R = Replace.
  T = Tighten.
- **(CA. only) means that the item or the maintenance is to be applied for the California model.**

Item		Interval				
	months	2	12	24	36	48
	km	1000	6000	12000	18000	24000
	miles	600	3750	7500	11250	15000
Air cleaner element ☞(Page 0B-3)		—	I	I	R	I
Exhaust pipe bolts and muffler bolts ☞(Page 0B-4)		T	—	T	—	T
Valve clearance ☞(Page 0B-5)		—	—	—	—	I
Spark plugs ☞(Page 0B-8)		—	I	I	I	R
Fuel hose ☞(Page 0B-11)		—	I	I	I	I
		Replace every 4 years				
Evaporative emission control system (if equipped) ☞(Page 0B-12)		—	—	I	—	I
Engine oil ☞(Page 0B-14)		R	R	R	R	R
Engine oil filter ☞(Page 0B-15)		R	—	—	R	—
PAIR (air supply) system ☞(Page 0B-15)		—	—	I	—	I
Engine coolant ☞(Page 0B-16)	"SUZUKI SUPER LONG LIFE COOLANT" (Blue)	Replace every 4 years or 48000 km (30000 miles)				
	"SUZUKI LONG LIFE COOLANT" (Green) or an engine coolant other than "SUZUKI SUPER LONG LIFE COOLANT" (Blue)	—	—	R	—	R
Radiator hose ☞(Page 0B-17)		—	I	I	I	I
Clutch hose ☞(Page 0B-17)		—	I	I	I	I
		Replace every 4 years				
Clutch fluid ☞(Page 0B-18)		—	I	I	I	I
		Replace every 2 years				
Drive chain ☞(Page 0B-19)		I	I	I	I	I
		Clean and lubricate every 1000 km (600 miles)				
Brakes ☞(Page 0B-20)		I	I	I	I	I

Item	Interval					
	months	2	12	24	36	48
	km	1000	6000	12000	18000	24000
	miles	600	3750	7500	11250	15000
Brake hose ☞(Page 0B-23)		—	I	I	I	I
		Replace every 4 years				
Brake fluid ☞(Page 0B-23)		—	I	I	I	I
		Replace every 2 years				
Tires ☞(Page 0B-25)		—	I	I	I	I
Steering ☞(Page 0B-26)		I	—	I	—	I
Front forks ☞(Page 0B-27)		—	—	I	—	I
Rear suspension ☞(Page 0B-27)		—	—	I	—	I
Chassis bolts and nuts ☞(Page 0B-28)		T	T	T	T	T
Lubrication ☞(Page 0B-31)		Lubricate every 1000 km (600 miles)				
Spoke wheels (DL1050RC) ☞(Page 0B-31)		I	I	I	I	I

Repair Instructions

Air Cleaner Element

BENL06L20206001

Refer to "Replacement" under "Air Cleaner Element" (Page 0B-3).

Inspection

1) Inspect the air cleaner element for clogging. If it is clogged with dirt, replace it with a new one.

NOTICE

- **Do not blow the air cleaner element with compressed air.**
- **If driving under dusty conditions, replace the air cleaner element more frequently. Make sure that the air cleaner is in good condition at all times. Life of the engine depends largely on this component.**

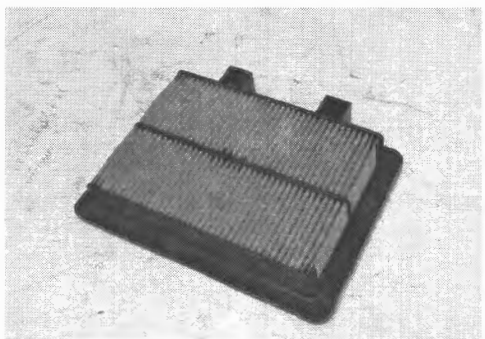

IE31J1140006-01

2) Disconnect the IAP sensor couplers (1).

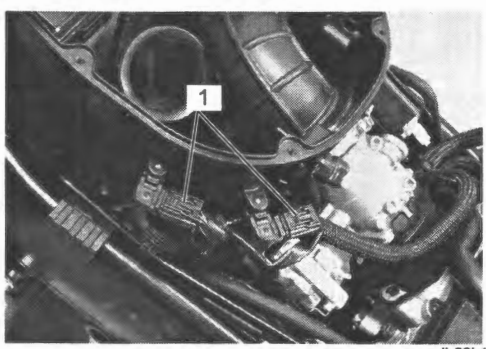

IL06L1020001-01

3) Remove the drain plug (1) and drain water from the air cleaner box.

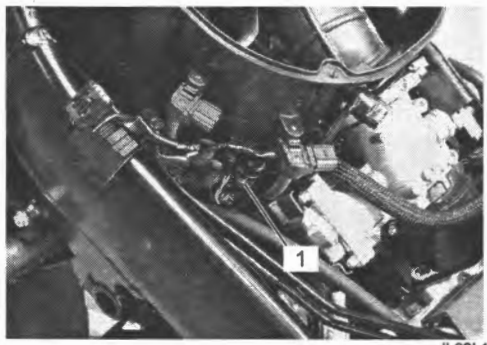

IL06L1020002-01

4) Install the drain plug and connect the IAP sensor couplers.

Replacement

Refer to "Fuel Tank Removal and Installation" in Section 1G (Page 1G-7).

1) Remove the air cleaner cover (1).

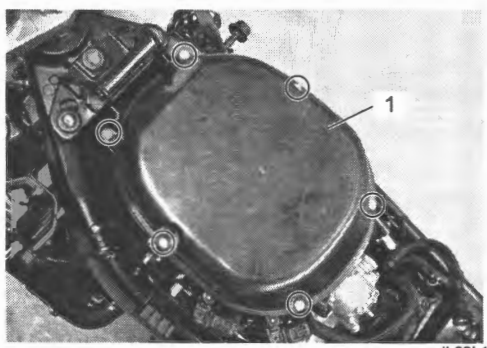

IL06L1020003-01

2) Remove the air cleaner element (1) from the air cleaner box.

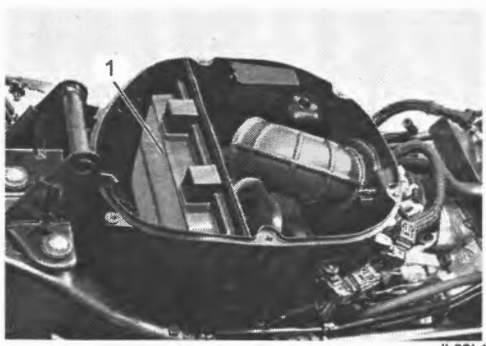

IL06L1020004-02

3) Install the new air cleaner element to the air cleaner box.

4) Install the air cleaner cover (1) to the air cleaner box, and tighten the air cleaner cover screws (2) to the specified torque.

Tightening torque
Air cleaner cover screw (a): 2.4 N·m (0.24 kgf-m, 1.8 lbf-ft)

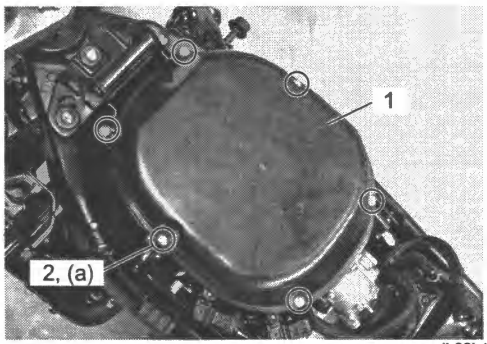

IL06L1020005-01

Exhaust Pipe Bolt and Muffler Mounting Bolts

BENL06L20206002

Check the exhaust pipe bolts, center exhaust pipe bolts, muffler connecting bolt, exhaust pipe connecting bolts and muffler mounting bolt are tightened to their specified torque.

Tightening torque
Exhaust pipe bolt (a): 23 N·m (2.3 kgf-m, 17.0 lbf-ft)
Exhaust pipe connecting bolt (b): 18 N·m (1.8 kgf-m, 13.5 lbf-ft)
Muffler mounting bolt (c): 30 N·m (3.1 kgf-m, 22.5 lbf-ft)
Muffler connecting bolt (d): 18 N·m (1.8 kgf-m, 13.0 lbf-ft)
Center exhaust pipe bolt (e): 25 N·m (2.5 kgf-m, 18.5 lbf-ft)

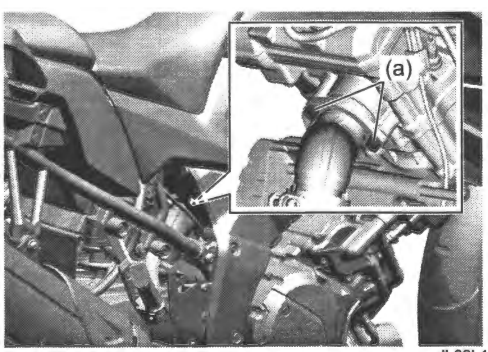

IL06L1020068-01

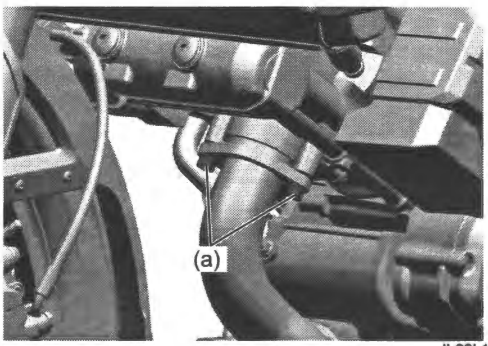

IL06L1020069-01

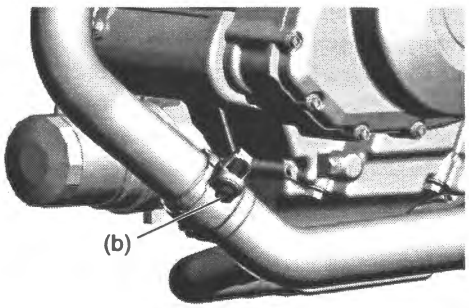

IL06L1020070-01

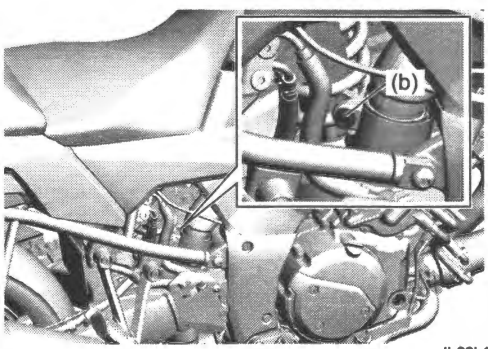

IL06L1020071-01

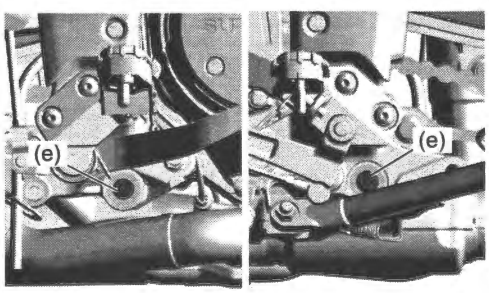

IL06L1020072-01

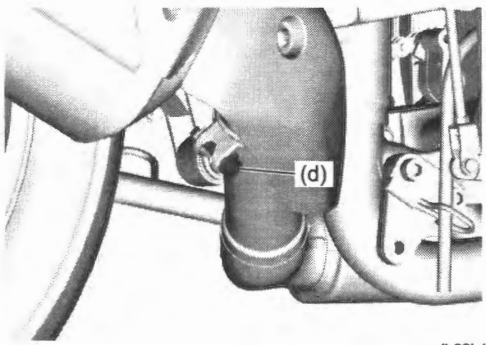

IL06L1020073-02

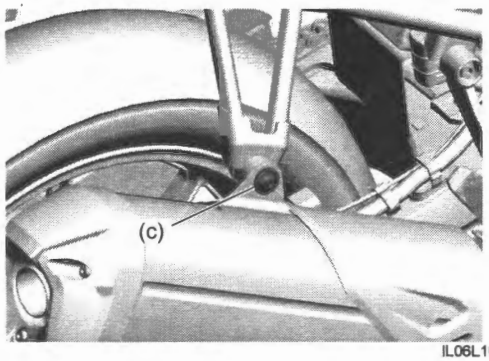

IL06L1020074-01

Valve Clearance

BENL06L20206003

Refer to "Cylinder Head Cover Removal and Installation" in Section 1D (Page 1D-12) and "Spark Plug Removal and Installation" in Section 1H (Page 1H-6).

Inspection

The valve clearance specification is different between the intake and exhaust valves. Valve clearance adjustment must be checked and adjusted, a) at the time of periodic inspection, b) when the valve mechanism is serviced, and c) when the camshafts are removed for servicing.

NOTE

- **The piston must be at "TDC" in the compression stroke in order to check the valve clearance or to adjust valve clearance.**
- **The clearance specification is in COLD state.**
- **For checking the valve clearance, rotate the crankshaft in the normal running direction.**

1) Remove the accessory bar. (If equipped) ☞(Page 9E-7).

2) Remove the EVAP canister No.2 bracket bots (1), and then move the EVAP canister (2) in arrow direction.

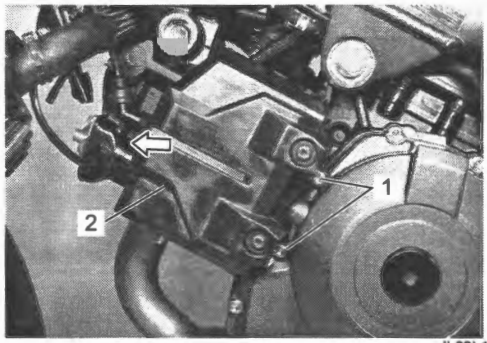

IL06L1020075-01

3) Remove the valve timing inspection plug (1) and generator cover plug (2) from the generator cover.

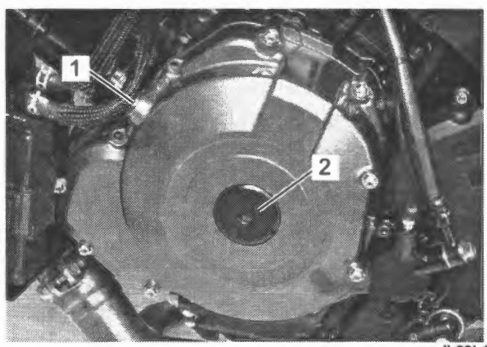

IL06L1020009-01

4) Turn the crankshaft to set the front cylinder at TDC of compression stroke. (Align the "F | T" line (1) on the generator rotor to the index mark (2) of valve timing inspection hole and also bring the camshafts to the position as shown.)

NOTE

If the camshafts are not in position (3), turn the crankshaft 360° (1 turns) and confirm the position again.

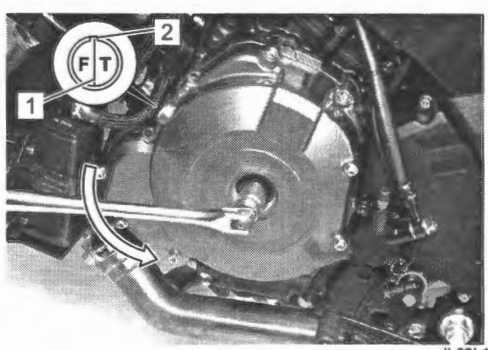

IL06L1020010-01

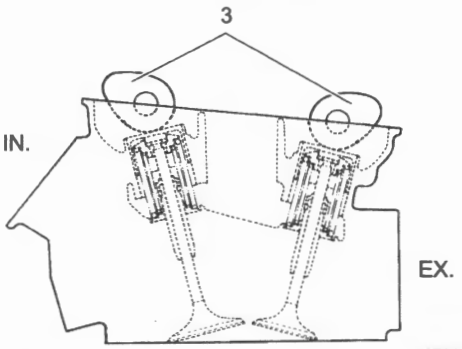

IE31J1140055-01

5) To inspect the front cylinder valve clearance, use a thickness gauge between the tappet and the cam. If the clearance is out of specification, adjust it into the specified range.

Special tool
(A): 09900–20803

Valve clearance
When engine cold
Intake [Standard]: 0.10 – 0.20 mm (0.004 – 0.008 in)
Exhaust [Standard]: 0.20 – 0.30 mm (0.008 – 0.012 in)

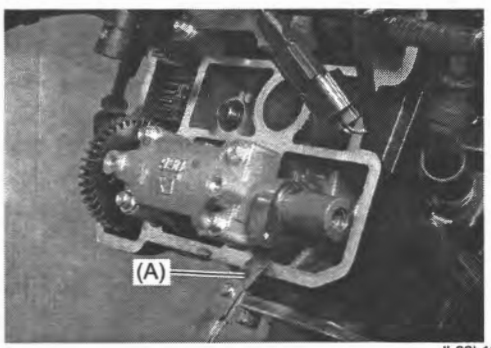

IL06L1020076-01

6) Turn the crankshaft 270 degrees (3/4 turn) to set the rear cylinder at TDC of compression stroke. (Align the "R | T" line (1) on the generator rotor to the index mark (2) of valve timing inspection hole and also bring the camshafts to the position (3) as shown.)

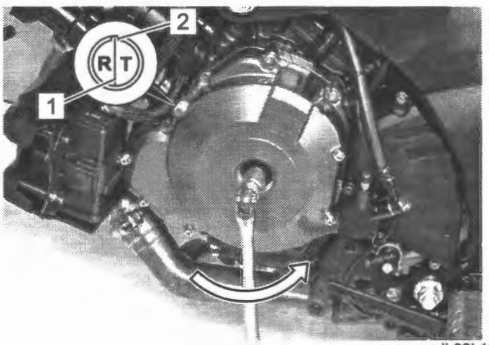

IL06L1020012-01

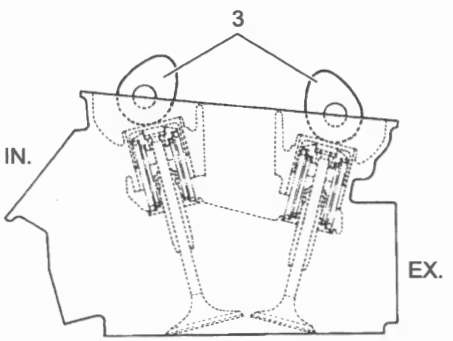

IE31J1140058-01

7) Inspect the rear cylinder valve clearance as the same manner of front cylinder and adjust the clearance if necessary.

Special tool
(A): 09900–20803

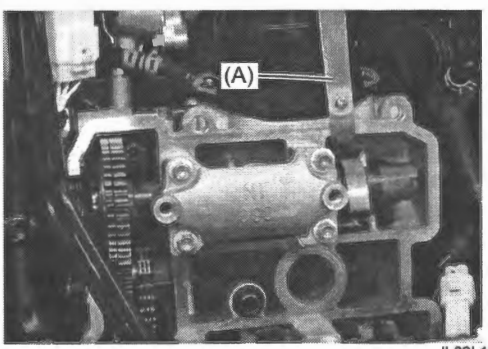

IL06L1020077-01

Adjustment

The clearance is adjusted by replacing the existing tappet shim with a thicker or thinner shim.

1) Remove the intake camshaft or exhaust camshaft. ☞(Page 1D-13)
2) Remove the tappet (1) and shim (2) by fingers or magnetic hand.

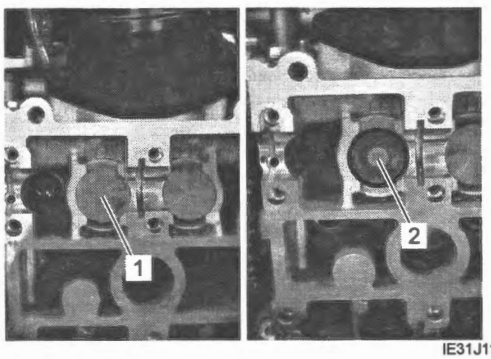

IE31J1140060-01

3) Select proper size of tappet as follows to adjust valve clearance to specification.
   a) Using a micrometer, measure the thickness of the removed shim (1).

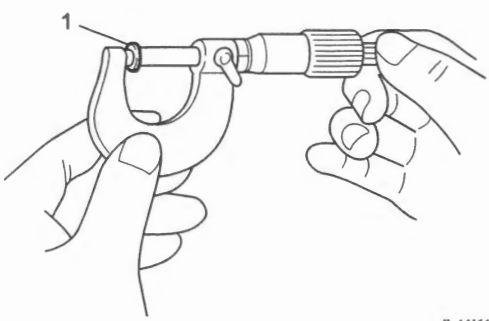

IL41K1140050-01

   b) Calculate the thickness of new shim by the following formula.
      - Intake:
        A = B + C - 0.15 mm (0.0059 in.)
      - Exhaust:
        A = B + C - 0.25 mm (0.0098 in.)
      - A: Thickness of new shim
      - B: Thickness of removed shim
      - C: Measured valve clearance

NOTE

The figures indicate the thickness of the shim, as illustrated, a total of 22 sizes of shim are available ranging from 2.300 to 3.350 mm in steps of 0.050 mm.

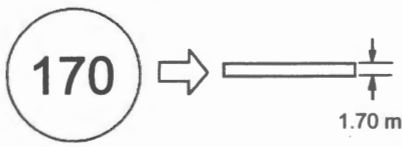

I837H1020014-01

   c) Select new shim closest to calculated value from available size.

Indicated figure	Thickness
230	2.300 mm
235	2.350 mm
240	2.400 mm
245	2.450 mm
250	2.500 mm
255	2.550 mm
260	2.600 mm
265	2.650 mm
270	2.700 mm
275	2.750 mm
280	2.800 mm
285	2.850 mm
290	2.900 mm
295	2.950 mm
300	3.000 mm
305	3.050 mm
310	3.100 mm
315	3.150 mm
320	3.200 mm
325	3.250 mm
330	3.300 mm
335	3.350 mm
340	3.400 mm
345	3.450 mm
350	3.500 mm

4) Fit the selected shim (1) to the valve stem end.

NOTE

- **Apply engine oil to tappet shim top and bottom faces.**
- **When seating the tappet shim, be sure the figure printed surface faces the tappet.**

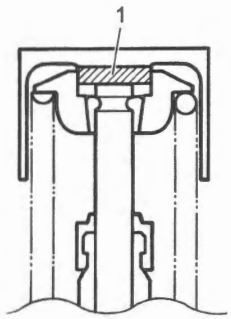

IE31J1140061-01

5) Install the intake camshaft or exhaust camshaft. ☞(Page 1D-15)
6) Rotate the engine so that the tappet is depressed fully. This will squeeze out oil trapped between the shim and the tappet that could cause an incorrect measurement, then check the clearance again to confirm that it is within the specified range.
7) After finishing the valve clearance adjustment, check the engine for smooth starting and free from any abnormal noise.

Spark Plugs

BENL06L20206004

Inspection

Spark plug gap

Measure the spark plug gap "a" using a thickness gauge.

Spark plug gap
Type [Standard]: NGK LMAR8BI-9
Gap [Standard]: 0.8 – 0.9 mm (0.031 – 0.035 in)

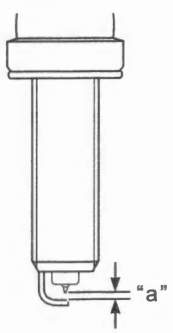

IE31J1180011-01

Electrodes condition

Check the worn or burnt condition of the electrodes. If it is extremely worn or burnt, replace the spark plug. And also replace the spark plug if it has a broken insulator, or damaged thread.

NOTICE

Confirm the thread size and reach when replacing the spark plug. If the reach is too short, carbon will be deposited on the screw portion of the spark plug hole and engine damage may result.

Replacement

⚠ WARNING

The hot radiator and hot engine can burn you.
Wait until the radiator and the engine are cool enough to touch.

Front cylinder (side)

1) Turn the ignition switch OFF.
2) Disconnect the spark plug cap (1) from the spark plug.

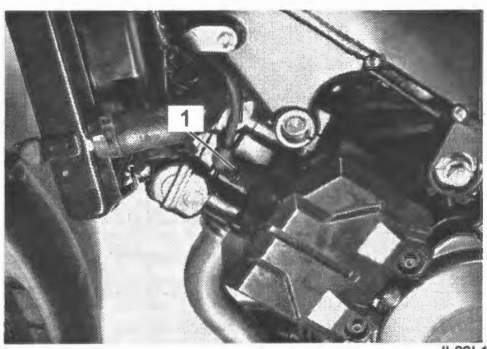

IL06L1020078-01

3) Remove the spark plug (1) from the cylinder head with a spark plug wrench.

Special tool
(A): 09930–10190

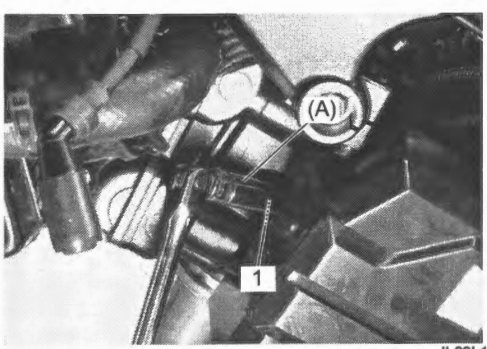

IL06L1020079-01

4) Install the new spark plug in the reverse order of removal. Pay attention to the following points.
   - Screw the spark plugs into the cylinder head with fingers, and then tighten them to the specified torque.

NOTICE

Do not cross thread or over tighten the spark plug, or such an operation will damage the aluminum threads of the cylinder head.

Special tool
(A): 09930–10190

Tightening torque
Spark plug: 11 N·m (1.1 kgf-m, 8.5 lbf-ft)

   - Refer to "Ignition Coil Construction" in Section 1H (Page 1H-4).

Front cylinder (center)

1) Remove the side cover assembly. ☞(Page 9D-33)
2) Remove the fuel tank. ☞(Page 1G-7)
3) Remove the regulator/rectifier. ☞(Page 1J-8)
4) Remove the radiator mounting bolts (1), and then move the radiator (2) in arrow direction.

NOTICE

Be careful not to damage the radiator fins.



IL06L1020016-01

5) Disconnect the spark plug cap (1) from the spark plug.



IL06L1020097-01

6) Remove the spark plug (1) from the cylinder head with a spark plug wrench.

Special tool
(A): 09930–10190

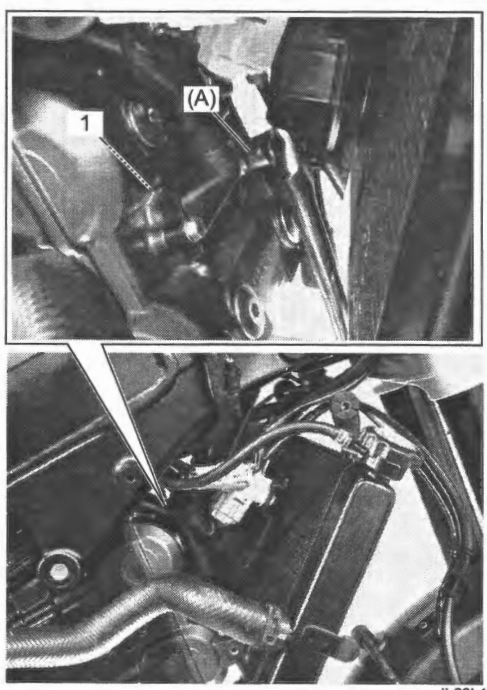

IL06L1020080-01

7) Install the new spark plug in the reverse order of removal. Pay attention to the following points.
   - Screw the spark plugs into the cylinder head with fingers, and then tighten them to the specified torque.

NOTICE

Do not cross thread or over tighten the spark plug, or such an operation will damage the aluminum threads of the cylinder head.

Special tool
09930–10190

Tightening torque
Spark plug: 11 N·m (1.1 kgf-m, 8.5 lbf-ft)

   - Connect the spark plug caps. Refer to "Ignition Coil Construction" in Section 1H (Page 1H-4).

Center side of spark plug cap

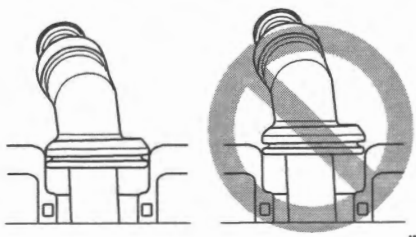

IE31J1180030-01

Rear cylinder (side)

1) Remove the side cover assembly. ☞(Page 9D-33)
2) Disconnect the spark plug cap (1) from the spark plug.

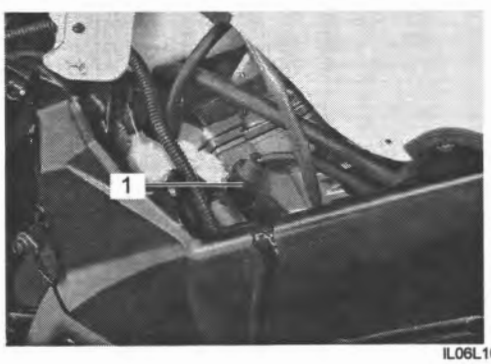

IL06L1020019-01

3) Remove the spark plug (1) from the cylinder head with a spark plug wrench.

Special tool
(A): 09930–10190

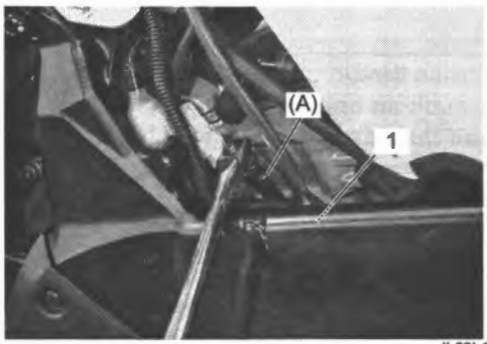

IL06L1020020-01

4) Install the new spark plug in the reverse order of removal. Pay attention to the following points.
   - Screw the spark plugs into the cylinder head with fingers, and then tighten them to the specified torque.

NOTICE

Do not cross thread or over tighten the spark plug, or such an operation will damage the aluminum threads of the cylinder head.

Special tool
09930–10190

Tightening torque
Spark plug: 11 N·m (1.1 kgf-m, 8.5 lbf-ft)

   - Connect the spark plug caps. Refer to "Ignition Coil Construction" in Section 1H (Page 1H-4).

Rear cylinder (side)

1) Lift and support the fuel tank. ☞(Page 1G-7)
2) Remove the radiator reservoir tank mounting bolts (1), and then move the radiator reservoir tank (2) in arrow direction.

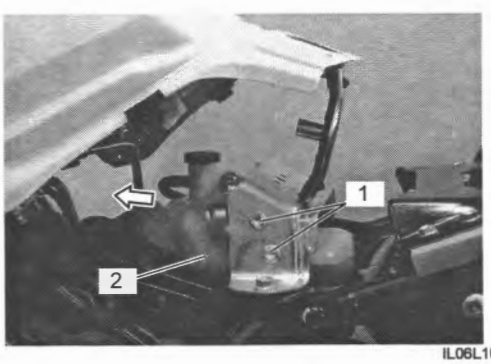

IL06L1020083-01

3) Disconnect the spark plug cap (1) from the spark plug.

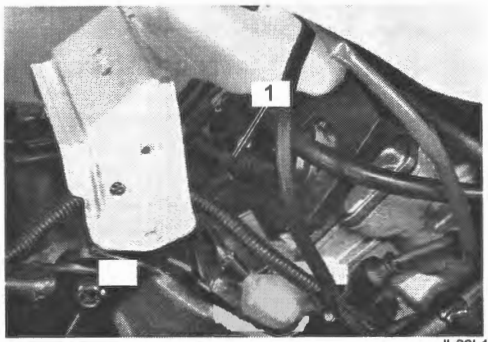

IL06L1020022-01

4) Remove the spark plug (2) from the cylinder head with a spark plug wrench.

Special tool
(A): 09930–10190

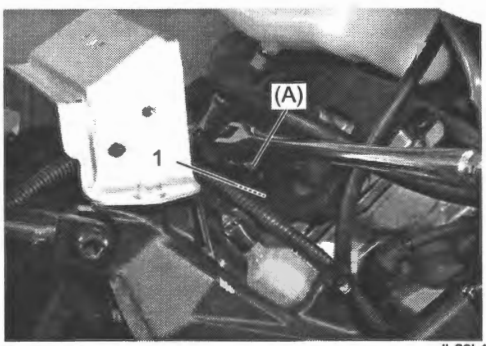

IL06L1020023-01

5) Install the new spark plug in the reverse order of removal. Pay attention to the following points.

- Screw the spark plugs into the cylinder head with fingers, and then tighten them to the specified torque.

NOTICE

Do not cross thread or over tighten the spark plug, or such an operation will damage the aluminum threads of the cylinder head.

Tightening torque
Spark plug: 11 N·m (1.1 kgf-m, 8.5 lbf-ft)

- Connect the spark plug caps. Refer to "Ignition Coil Construction" in Section 1H (Page 1H-4).

Center side of spark plug cap

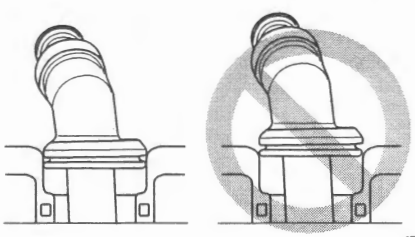

IE31J1180030-01

- Install the radiator reservoir tank. ☞(Page 1F-10)

Fuel Hose

BENL06L20206005

Inspection

1) Lift and support the fuel tank. ☞(Page 1G-7)
2) Inspect the fuel feed hose (1) for damage and fuel leakage. If any defects are found, the fuel feed hose (1) must be replaced.
3) Any leakage from the connecting section (2), replace the fuel feed hose (1) with a new one. ☞(Page 1G-5)

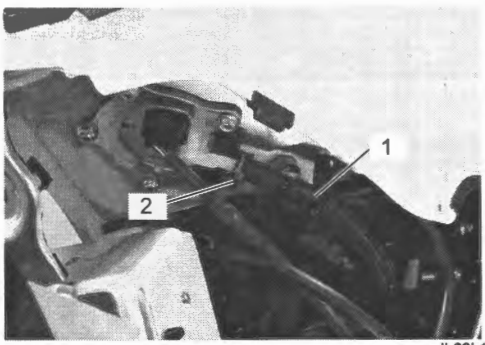

IL06L1020084-01

4) After finishing the fuel feed hose inspection, install the removed parts.

Replacement

1) Lift and support the fuel tank. ☞(Page 1G-7)
2) Disconnect the fuel feed hose (1). ☞(Page 1G-3)



IL06L1020085-01

3) Remove the air cleaner box. ☞(Page 1D-6)
4) Disconnect the fuel feed hose (1) from the throttle body.

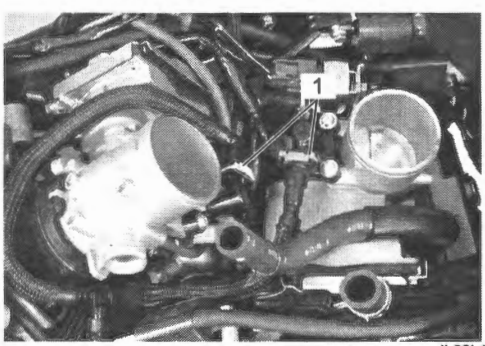

IL06L1020086-01

5) Install the new fuel feed hose in the reverse order of removal.

Evaporative emission control system

BENL06L20206006

Refer to "EVAP System Removal and Installation" in Section 1B (Page 1B-6).

Hose

1) Remove the air cleaner box. ☞(Page 1D-6)
2) Inspect the EVAP hoses (1) for wear or damage. If it is worn or damage, replace the EVAP hose with a new one. ☞(Page 1B-6)

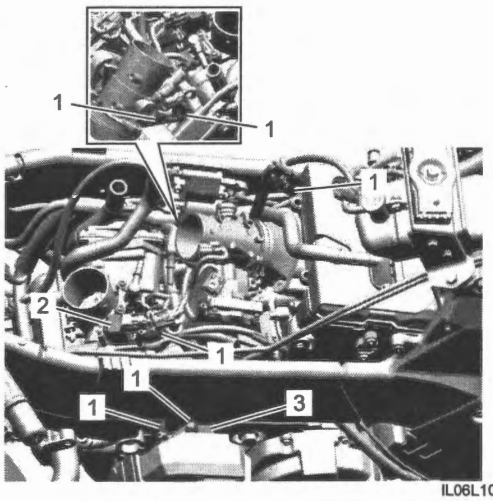

IL06L1020050-01

2.	EVAP system purge control solenoid valve
3.	EVAP canister

3) Check that the EVAP hoses are securely connected. ☞(Page 1B-2)

EVAP Canister

⚠ WARNING

Gasoline and gasoline vapor is toxic. A small amount of fuel remains in the EVAP canister when checking it.
Do not swallow the fuel when blowing the EVAP canister.

Check EVAP canister as follows.
If faulty condition is found, replace EVAP canister.

1) Remove the EVAP canister. ☞(Page 1B-6)
2) Check EVAP canister body for damage to the body.
3) Check that there is no restriction of flow through purge port (3) and air port (4) when specified air pressure (2) is blown into tank port (1).

EVAP canister blowing air pressure
[Standard]: 2.0 kPa (0.02 kgf/cm², 0.29 psi)

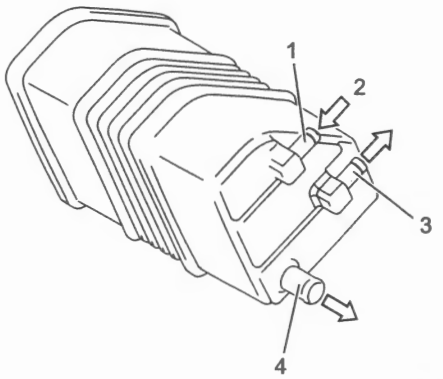

IJ04K3120001-01

EVAP System Purge Control Solenoid Valve

⚠ WARNING

Gasoline and gasoline vapor is toxic. A small amount of fuel remains in the EVAP system purge control solenoid valve when checking it.
Do not swallow the fuel when blowing the EVAP system purge control solenoid valve.

1) Check the resistance between the terminals of the EVAP system purge control solenoid valve (1). If the resistance is not within the standard range, replace the EVAP system purge control solenoid valve with a new one.

EVAP system purge control solenoid valve resistance
20 °C (68 °F) [Standard]: 22 – 26 Ω

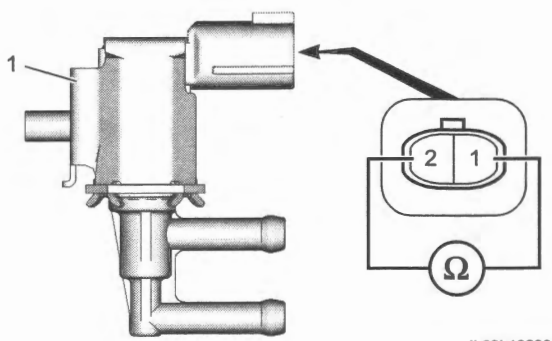

IL06L1020051-01

2) Check the EVAP system purge control solenoid valve as follows. If faulty condition is found, replace the EVAP system purge control solenoid valve with a new one.
   a) Connect clean hose (2) to air inlet port (1).
   b) Check that there is no air flow to air outlet port (4) when air (3) is blown into air inlet port.

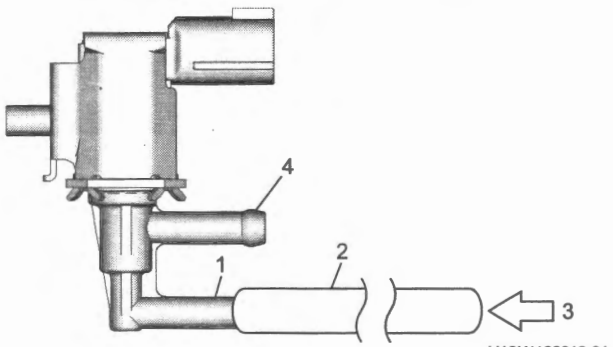

IJ10K1120016-01

   c) Connect the 12 V battery to the terminals of the EVAP system purge control solenoid valve (1).
   d) Check that there is no restriction of flow through air outlet port (4) when air (3) is blown into air inlet port (2).

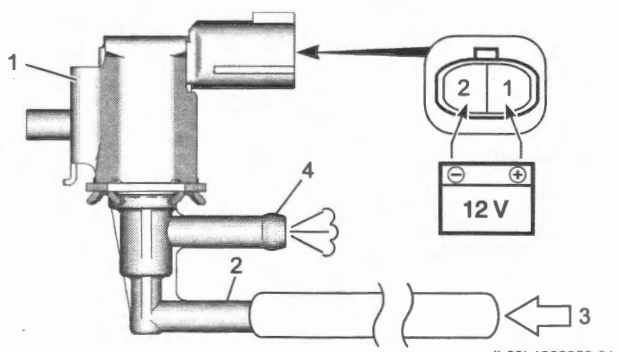

IL06L1020052-01

Fuel Shut-off Valve

Check fuel shut-off valve as follows.
If faulty condition is found, replace fuel tank cap.
☞(Page 1G-7)

1) Hold the fuel tank cap so that the fuel tank cap breather hole (1) is aligned with and closely contacts the packing breather port (2) and the fuel tank cap upper surface (3) is located lower than the fuel tank cap ring upper surface (4).

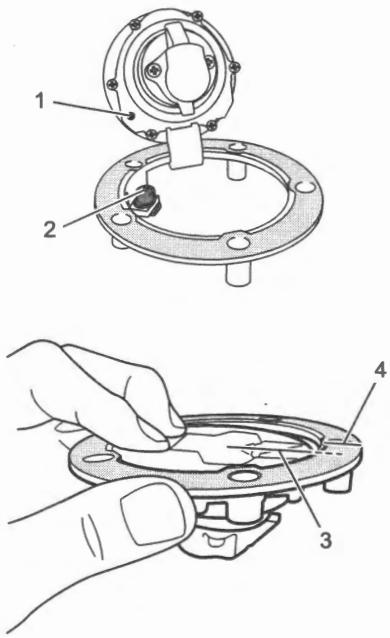

IH13K1120032-03

2) Keep the step 1), connect the vacuum pump gauge to the breather port (1) with the fuel tank cap turned upright, and give positive pressure to check that air can pass through.

Special tool
(A): 09917–47011

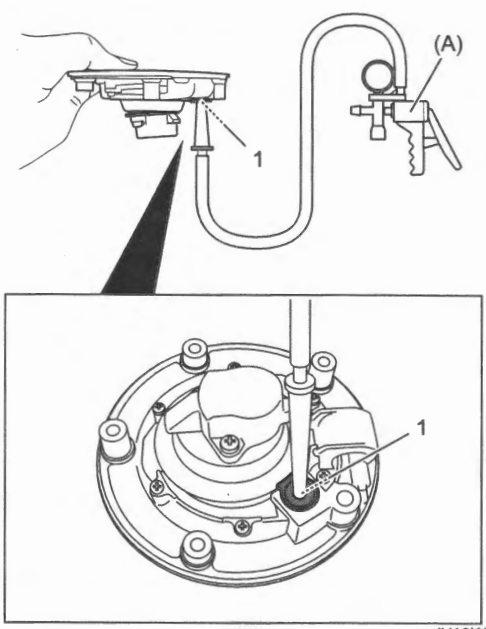

IH13K1120033-03

3) Keep the step 1), connect the vacuum pump gauge to the breather port (1) with the fuel tank cap turned upside down, and give negative pressure to check that air cannot pass through.

Special tool
(A): 09917–47011

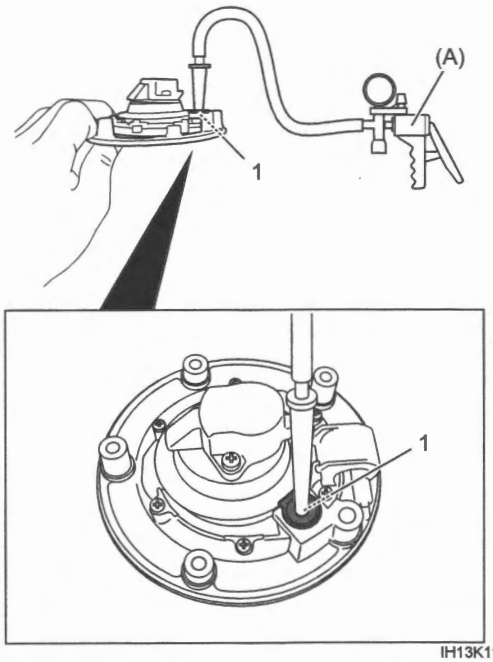

IH13K1120034-03

Engine Oil

BENL06L20206007

Inspection

Engine Oil Leakage Inspection

Visually check the cylinder, crankcase, etc. for oil leakage.

Engine Oil Level Inspection

1) Keep the motorcycle upright on a level surface.
2) Start the engine at idle speed for a few minutes. Turn off the engine and wait for about three minutes.
3) Check the oil level and deterioration through the inspection window. If the oil level is below mark "L", add new oil up to "F" level. However, if the oil is deteriorated or discoloration, replace it.

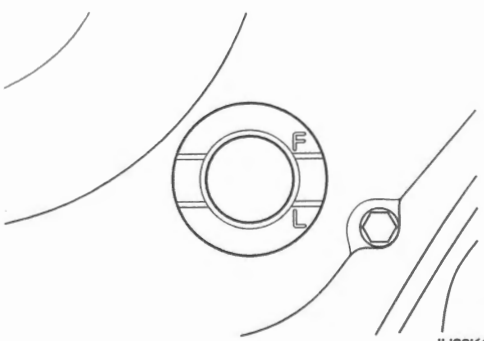

IH28K1150028-02

Replacement

1) Keep the motorcycle upright on a level surface.
2) Start the engine at idle speed for a few minutes and then turn off the engine.
3) Place an oil pan under the engine and remove the oil filler cap (1).
4) Drain engine oil by removing the oil drain plug (2).

⚠ CAUTION

To avoid getting burned, do not touch the engine, engine oil and exhaust system.

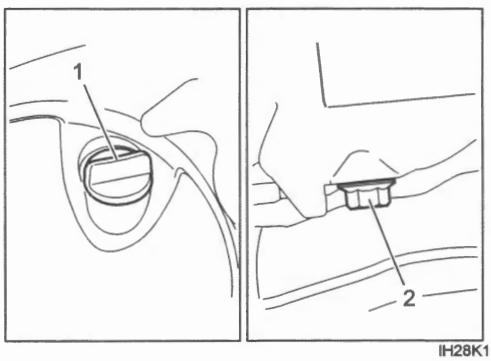

IH28K1150029-01

5) Install the new gasket washer (1) to the oil drain plug (2) and tighten the oil drain plug to the specified torque.

NOTE

The sharp edge (3) of gasket must face the oil drain plug side.

Tightening torque
Oil drain plug (a): 23 N·m (2.3 kgf-m, 17.0 lbf-ft)

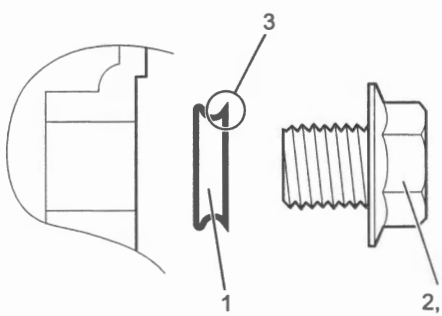

IH13K1150048-01

6) Pour new oil through the oil filler hole.

Necessary amount of engine oil
Oil change [Standard]: 2700 ml (2.9 US qt, 2.4 Imp qt)
Oil and filter change [Standard]: 3000 ml (3.2 US qt, 2.6 Imp qt)
Engine overhaul [Standard]: 3500 ml (3.7 US qt, 3.1 Imp qt)

7) Install the oil filer cap.
8) Start the engine and check for oil leakage.
9) Stop the engine and check the engine oil level again. Refer to "Inspection" under "Engine Oil" (Page 0B-14).

Engine Oil Filter Replacement

BENL06L20206008

1) Drain engine oil. Refer to "Replacement" under "Engine Oil" (Page 0B-14).
2) Remove the oil filter (1) with the special tool.

NOTE

Detach the special tool once the oil filter has come loose, and then remove the filter by hand.

Special tool
(A): 09915–40620

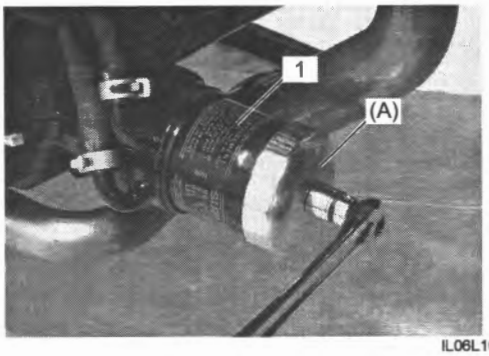

IL06L1020099-01

3) Apply engine oil lightly to the O-ring of new oil filter (1) before installation.

NOTICE

ONLY USE A GENUINE SUZUKI MOTORCYCLE OIL FILTER.
Other manufacturer's oil filters may differ in thread specifications (thread diameter and pitch), filtering performance and durability which may lead to engine damage or oil leaks. Also, do not use a genuine Suzuki automobile oil filter on this motorcycle.

4) Install a new oil filter. Turn it by hand until you feel that the oil filter O-ring contacts the oil filter mounting surface. Then, tighten the oil filter two full turns (or to specified torque) with the special tool.

NOTE

To properly tighten the oil filter, use the special tool. Never tighten the oil filter by hand only.

Special tool
(A): 09915–40620

Tightening torque
Oil filter (a): 20 N·m (2.0 kgf-m, 15.0 lbf-ft)

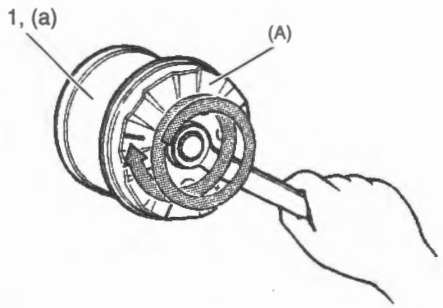

ID26J1150014-03

5) Add new engine oil. Refer to "Replacement" under "Engine Oil" (Page 0B-14).
6) Check the engine oil level. Refer to "Inspection" under "Engine Oil" (Page 0B-14).

PAIR (air supply) System

BENL06L20206009

PAIR Hose

1) Remove the air cleaner box. ☞(Page 1D-6)
2) Inspect the PAIR hoses (1) for wear or damage. If it is worn or damaged, replace the PAIR hose with a new one. ☞(Page 1B-5)

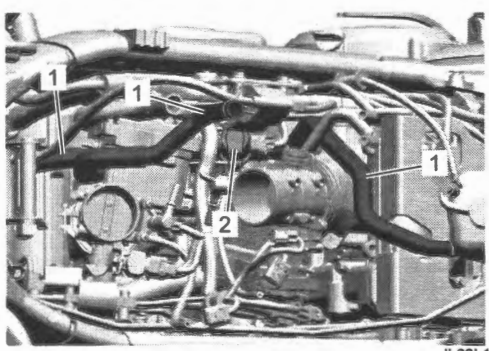

IL06L1020053-01

3) Check that the PAIR hoses are securely connected. ☞(Page 1B-1)

PAIR Reed Valve

1) Remove the PAIR reed valve. ☞(Page 1B-3)
2) Inspect the reed valves for carbon deposit. If carbon deposit is found on the reed valve, replace the PAIR reed valve with a new one.



IF31J1120010-01

3) Install the PAIR reed valve. ☞(Page 1B-3)

PAIR Control Solenoid Valve

1) Remove the PAIR control solenoid valve, if necessary. ☞(Page 1B-5)
2) Check that air flows through the air inlet port to the air outlet ports. If air does not flow out, replace the PAIR control solenoid valve with a new one.

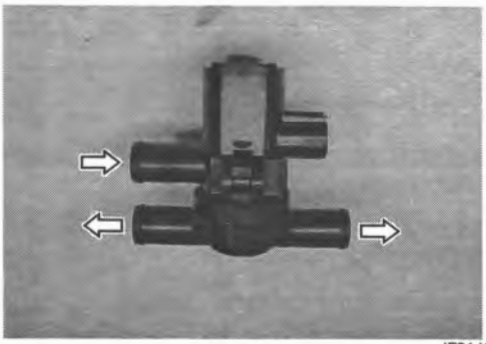

IF31J1120011-01

3) Connect the 12 V battery to the PAIR control solenoid valve terminals and check the air flow. If air does not flow out, the solenoid valve is in normal condition.

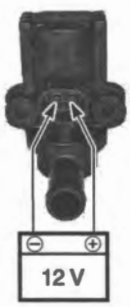

IF31J1120012-01

4) Check the resistance between the terminals of the PAIR control solenoid valve. If the resistance is out of the specified valve, replace the PAIR control solenoid valve with a new one.

PAIR solenoid valve resistance
20 – 30 °C (68 – 86 °F) [Standard]: 20 – 24 Ω

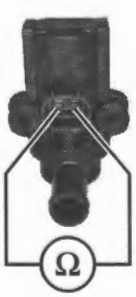

IF31J1120013-01

5) Reinstall the PAIR control solenoid valve. ☞(Page 1B-5)

Engine Coolant

BENL06L20206010

Inspection

1) Keep the motorcycle upright.
2) Lift and support the fuel tank. ☞(Page 1G-7)
3) Check the engine coolant level by observing the full (1) and lower (2) lines on the engine coolant reservoir tank. If the level is below the lower line, add engine coolant to the bottom of full line from the engine coolant reservoir tank filler.

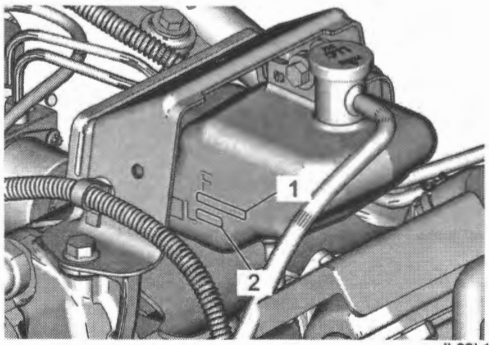

IL06L1020028-02

4) Install the reservoir tank cap (1) by aligning the match mark (2) and reservoir tank overflow hose (3).

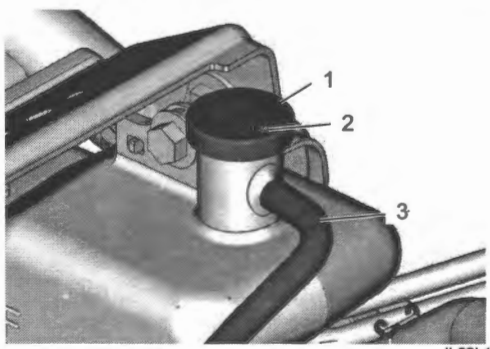

IL06L1020029-02

Replacement

Refer to "Engine Coolant Description" in Section 1F (Page 1F-1).

1) Support the motorcycle upright.
2) Remove the side cover assembly. ☞(Page 9D-33)
3) Remove the radiator cap (1).

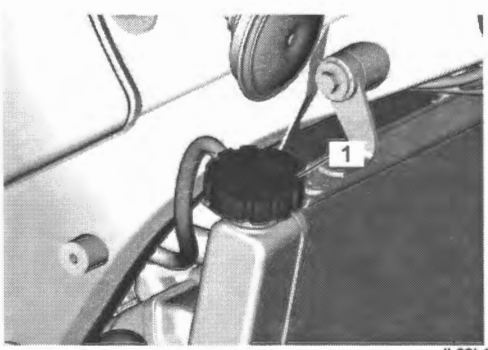

IL06L1020030-02

4) Drain engine coolant by disconnecting the oil cooler inlet hose (1) from the oil cooler.

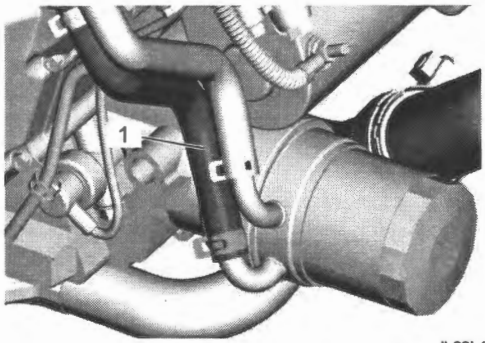

IL06L1020031-02

5) Flush the radiator with fresh water if necessary.
6) Connect the oil cooler inlet hose (1) to the oil cooler. ☞(Page 1F-3)

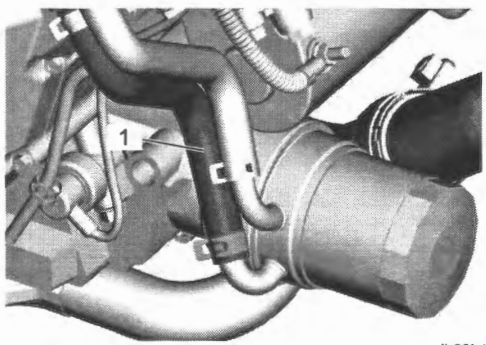

IL06L1020032-02

7) Pour the specified engine coolant up to the radiator inlet.

Engine coolant capacity (Engine side)
1900 ml (2.0 US qt, 1.6 Imp qt)

Engine coolant capacity (Reservoir tank side)
230 ml (0.24 US qt, 0.20 Imp qt)

8) Slowly swing the motorcycle, right and left, to bleed the air trapped in the cooling circuit.
9) Add engine coolant up to the radiator inlet.
10) Start up the engine and bleed air from the radiator inlet completely.
11) Add engine coolant up to the radiator inlet.
12) Repeat the 10), 11) procedures until no air bleeds from the radiator inlet.
13) Close the radiator cap securely.
14) After warming up and cooling down the engine several times, add the engine coolant up to the full level of the reservoir tank.
15) Install the removed parts.

Radiator Hose

BENL06L20206011

1) Remove the side cover assembly. ☞(Page 9D-33)
2) Check the radiator hoses for crack, damage or engine coolant leakage. If any defect is found, replace the radiator hose with a new one.
3) Any leakage from the connecting section (1) should be corrected by proper tightening. ☞(Page 1F-3)

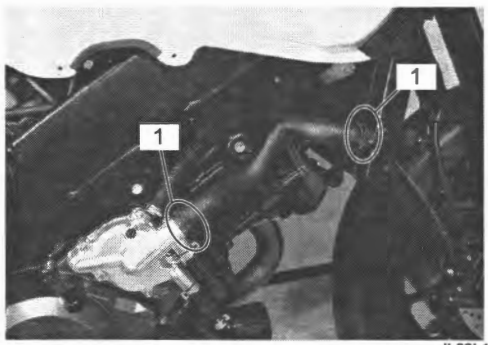

IL06L1020034-01

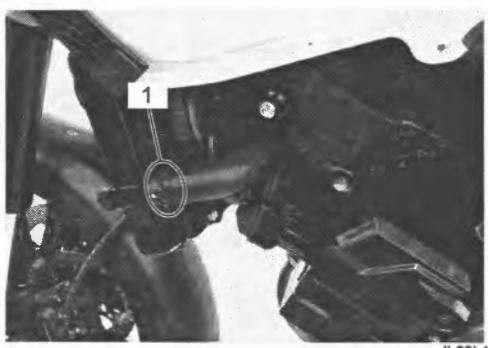

IL06L1020035-01

Clutch Hose

BENL06L20206012

Inspection

Inspect the clutch hose (1) for clacks, damage and clutch fluid leakage. If defects are found, replace clutch hose with a new one.

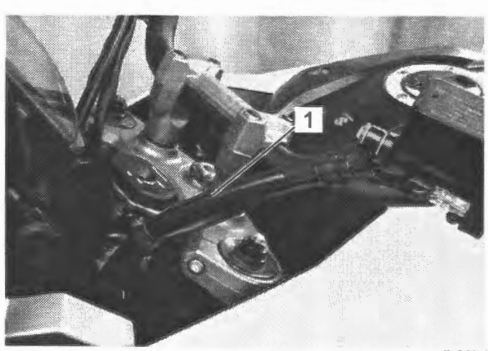

IL06L1020036-01

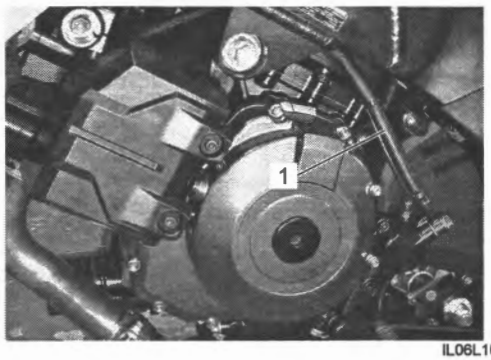

IL06L1020037-01

Replacement

Refer to "Wiring Harness Routing Diagram" in Section 9A (Page 9A-23), and "Clutch Hose Routing Diagram" in Section 5C (Page 5C-2).

1) Drain clutch fluid. ☞(Page 5C-6)
2) Remove the throttle body. ☞(Page 1D-7)
3) Remove the clamps and clutch hose.
4) Install the new clutch hose and clamps.
5) Install the throttle body assembly. ☞(Page 1D-7)
6) Bleed air from the clutch system. ☞(Page 5C-5)

Clutch Fluid

BENL06L20206013

Inspection

1) Keep the motorcycle upright and place the handlebar straight.
2) Check the clutch fluid level by observing the lower limit line (1) on the clutch fluid reservoir. When the clutch fluid level is below the lower limit line, replenish with clutch fluid that meets the following specification.

Brake Fluid 99000–23140–D04 (SUZUKI Brake Fluid DOT 4)

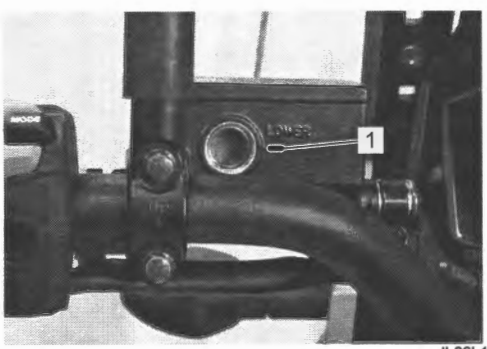

IL06L1020087-01

Replacement

1) Place the motorcycle on a level surface and keep the handlebar straight.
2) Remove the clutch fluid reservoir cap and diaphragm from the clutch master cylinder.
3) Suck up the old clutch fluid as much as possible.

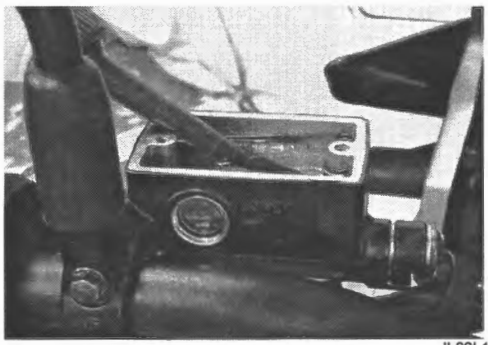

IL06L1020039-01

4) Fill the reservoir with new clutch fluid.

Brake Fluid 99000–23140–D04 (SUZUKI Brake Fluid DOT 4)

5) Attach a clear hose (1) to the air bleeder valve (2) and insert the free end of the hose into a receptacle.

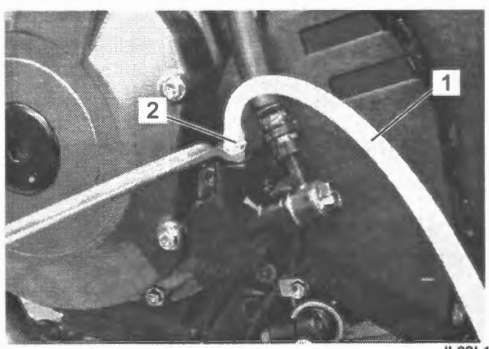

IL06L1020040-01

6) Loosen the air bleeder valve, squeeze and release the clutch lever and drain the old clutch fluid out of the clutch system.

NOTE

While bleeding the clutch system, replenish the reservoir with the clutch fluid as necessary to keep the fluid above the lower level.

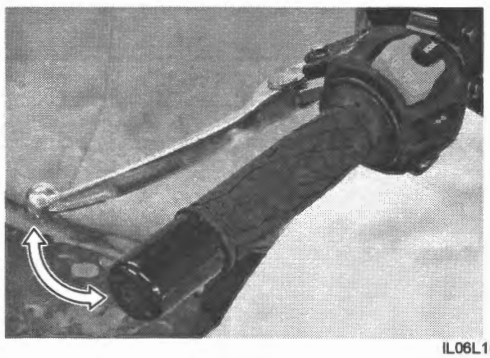

IL06L1020088-01

7) Bleed the air from the clutch system. ☞(Page 5C-5)

Drive Chain

BENL06L20206014

Drive Chain Visual Check

1) With the transmission in neutral, support the motorcycle a jack and turn the rear wheel slowly by hand.
2) Visually check the drive chain for the possible defects listed as follows. If any defects are found, the drive chain must be replaced. ☞(Page 3A-7)

NOTE

When replacing the drive chain, replace the drive chain and sprockets as a set.

- Loose pins
- Damaged rollers
- Dry or rusted links
- Kinked or binding links
- Excessive wear
- Improper chain adjustment
- Missing O-ring seals

Drive Chain Length Inspection

1) Loosen the rear axle nut (1).
2) Place the motorcycle on the side-stand.
3) Loosen the left and right chain adjuster lock-nuts (2).
4) Give tension to the drive chain fully by turning both chain adjuster bolts (3).

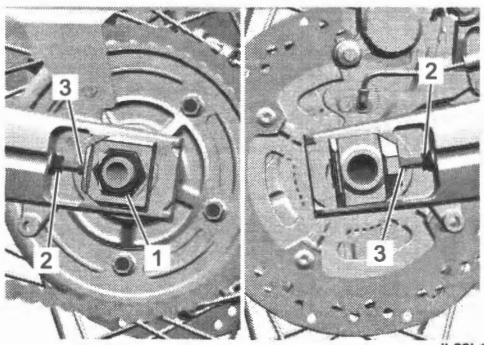

IL06L1310002-01

5) Count out 21 pins (20 pitches) on the chain and measure the distance between the two points. If the distance exceeds the service limit, the chain must be replaced. ☞(Page 3A-7)

Drive chain 20-pitch length
Service limit: 319.4 mm (12.57 in)

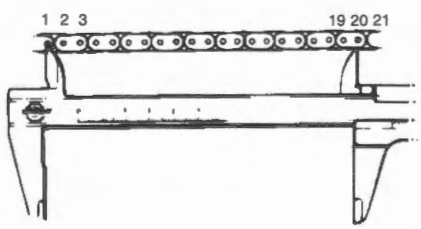

I649G1020034-02

6) After finishing the drive chain length inspection, adjust the drive chain slack.

Drive Chain Slack Adjustment

1) Loosen the rear axle nut (1).
2) Place the motorcycle on the side-stand.
3) Loosen the left and right chain adjuster lock-nuts (2).
4) Loosen or tighten both chain adjuster bolts (3) until there is 20 – 30 mm (0.8 – 1.2 in) "a" of slack at the middle of the chain between the engine and rear sprockets.

NOTICE

The reference marks (4) on both sides of the swingarm and the edge of each chain adjuster must be aligned to ensure that the front and rear wheels are correctly aligned.

Drive chain slack "a"
On side-stand
Standard: 20 – 30 mm (0.8 – 1.2 in)

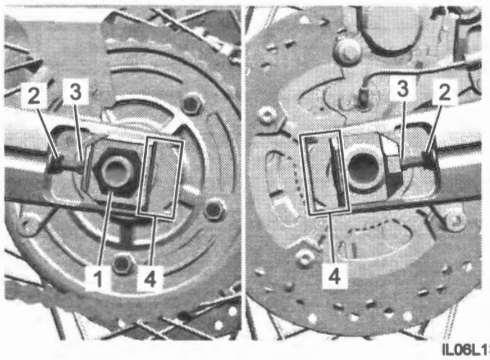

IL06L1310003-01

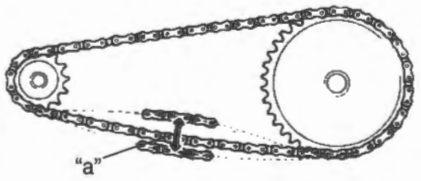

I649G1020036-02

5) After adjusting the drive chain, tighten the rear axle nut (1) to the specified torque.

Tightening torque
Rear axle nut: 100 N·m (10.2 kgf-m, 74.0 lbf-ft)

6) Recheck the drive chain slack after tightening the axle nut.
7) Tighten both chain adjuster lock-nuts (2) securely.

Tightening torque
Chain adjuster lock-nut: 22 N·m (2.2 kgf-m, 16.5 lbf-ft)

Brakes

BENL06L20206015

Brake Pad

Front Brake Pad Inspection

The extent of brake pads (1) wear can be checked by observing the grooved limit line "a" on the pads. When the wear exceeds the grooved limit line, replace the pads with new ones. ☞(Page 4B-2)

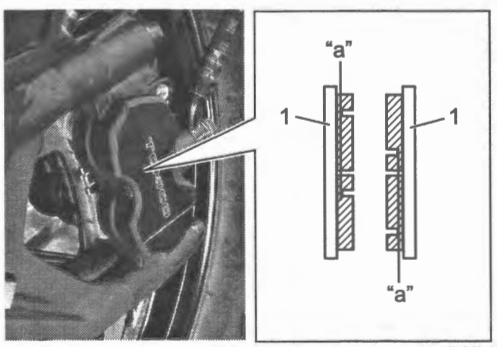

IL06L1020089-01

Rear Brake Pad Inspection

The extent of brake pads (1) wear can be checked by observing the grooved limit line "a" on the pads. When the wear exceeds the grooved limit line, replace the pads with new ones. ☞(Page 4C-2)

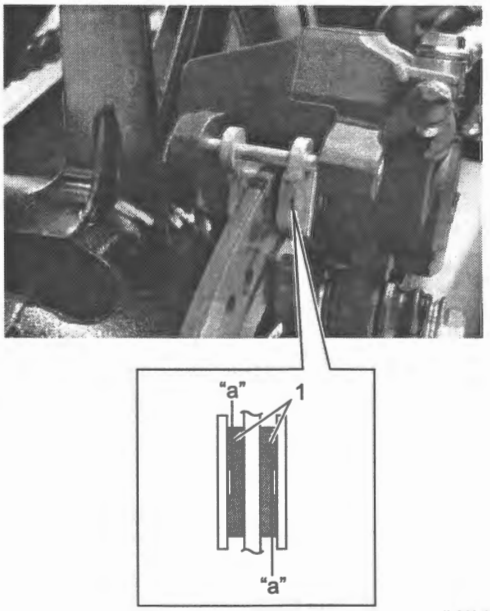

IL06L1020090-01

Brake Disc

Front Brake Disc Inspection

Brake Disc Thickness

Check the brake disc for damage or cracks and measure the thickness using the micrometer.
Replace the brake disc if the thickness is less than the service limit or if defect is found.

Front brake disc thickness
[Limit]: 4.5 mm (0.18 in)

Special tool
(A): 09912–66310

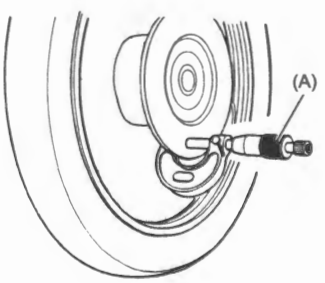

ID26J1420029-01

Brake Disc Runout

1) Dismount the front brake pads.
   Refer to "Front Brake Pad Replacement" in Section 4B (Page 4B-2).
2) Measure the runout using the dial gauge.
   Replace the disc if the runout exceeds the service limit.

Brake disc runout
[Limit]: 0.30 mm (0.012 in)

Special tool
(A): 09900–20607
(A): 09900–20701

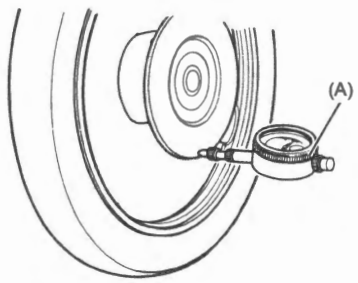

ID26J1420030-04

3) Remount the front brake pads.
   Refer to "Front Brake Pad Replacement" in Section 4B (Page 4B-2).

Rear Brake Disc Inspection
Brake Disc Thickness
Check the brake disc for damage or cracks and measure the thickness using the micrometer.
Replace the brake disc if the thickness is less than the service limit or if defect is found.

Rear brake disc thickness
[Limit]: 4.5 mm (0.18 in)

Special tool
(A): 09912–66310

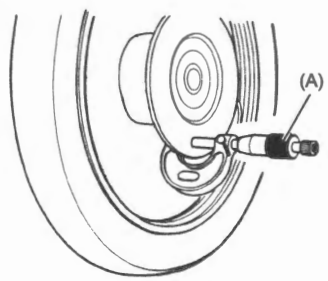

ID26J1430036-01

Brake Disc Runout

1) Dismount the rear brake pads.
   Refer to "Rear Brake Pad Inspection" in Section 4C (Page 4C-2).
2) Measure the runout using the dial gauge.
   Replace the disc if the runout exceeds the service limit.

Brake disc runout
[Limit]: 0.30 mm (0.012 in)

Special tool
(A): 09900–20607
(A): 09900–20701

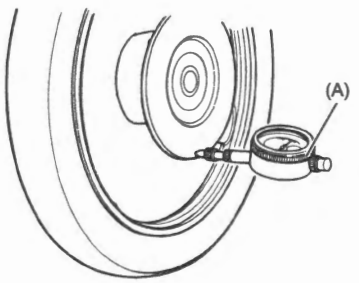

ID26J1420030-04

3) Remount the front brake pads.
   Refer to "Rear Brake Pad Replacement" in Section 4C (Page 4C-2).

Brake Light Switch
Front brake

1) Disconnect the brake light switch lead wire coupler (1).

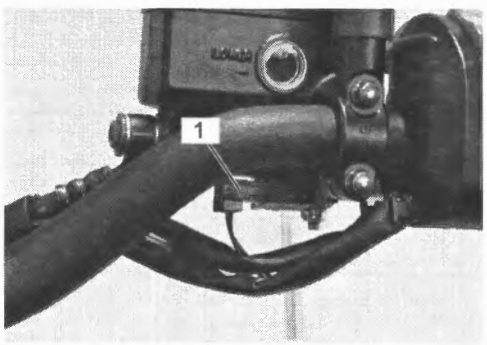

IL06L1020091-01

2) Inspect the switch for continuity between "T1" and "T2" with a circuit tester. If any abnormality is found, replace the front brake light switch with a new one.
   Refer to "Front Brake Light Switch Removal and Installation" in Section 4A (Page 4A-10).

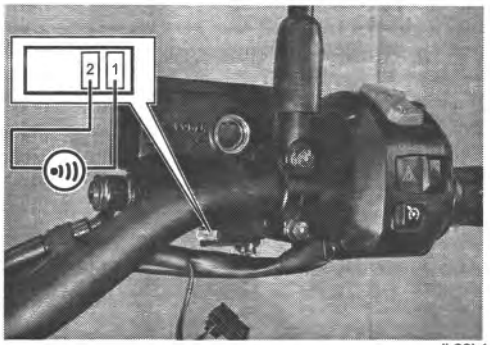

IL06L1410007-01

Color / Position	T1	T2
Free		
Grasped	○	○

IL06L1410009-01

3) Connect the front brake light switch lead wire coupler.

Rear brake

1) Remove the frame front cover (RH). ☞(Page 9D-30)
2) Disconnect the rear brake light switch lead wire coupler (1).

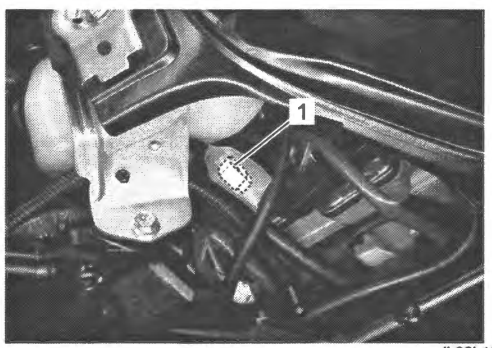

IL06L1020043-01

3) Inspect the switch for continuity between "T1" and "T2" with a tester.
If any abnormality is found, replace the rear brake light switch. Refer to "Rear Brake Light Switch Removal and Installation" in Section 4A (Page 4A-10).

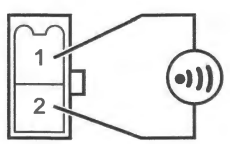

IL06L1410012-01

Color / Position	T1	T2
Free		
Depressed	○	○

IL06L1410013-01

4) Connect the rear brake light switch lead wire coupler.
5) Install the frame front cover (RH). ☞(Page 9D-30)

Brake Pedal Height

1) Inspect the brake pedal height "a" between the pedal top face and footrest.
Measure the piston brake pedal height at 18 mm (0.7 in) "b" as shown.
Adjust the brake pedal height if necessary.

Rear brake pedal height "a"
[Standard]: 20 – 30 mm (0.8 – 1.2 in)

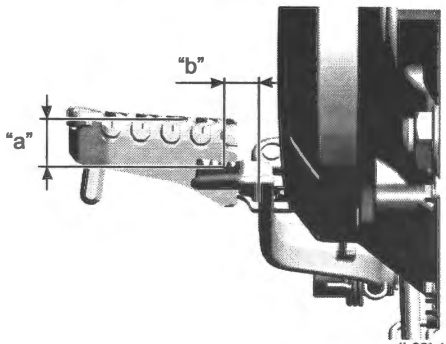

IL06L1020098-01

2) Loosen the lock-nut (1).
3) Turn the push rod (2) in or out until the brake pedal height is within the specification.
4) Tighten the lock-nut (1) to the specified torque.

Tightening torque
Rear brake master cylinder rod lock-nut (a): 18 N·m (1.8 kgf-m, 13.5 lbf-ft)

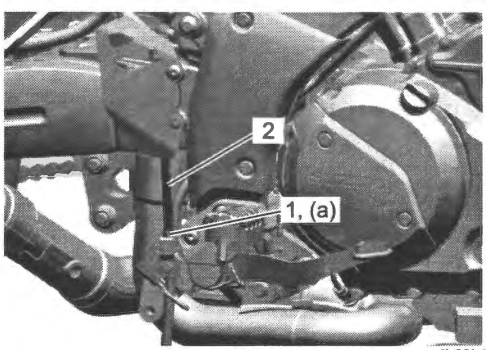

IL06L1020045-01

Brake Hose

BENL06L20206016

Inspection

1) Remove the seat. ☞(Page 9D-27)
2) Inspect the brake hoses and hose joints for crack, damage or brake fluid leakage. If any defects are found, replace the brake hose with a new one. ☞(Page 0B-23)

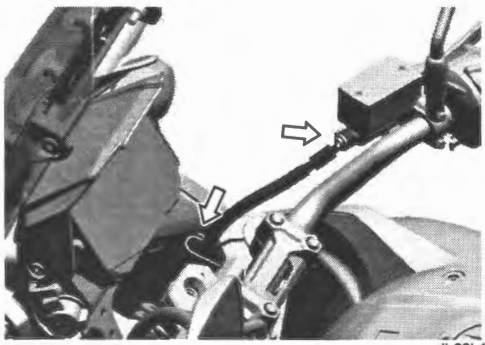

IL06L1020046-01

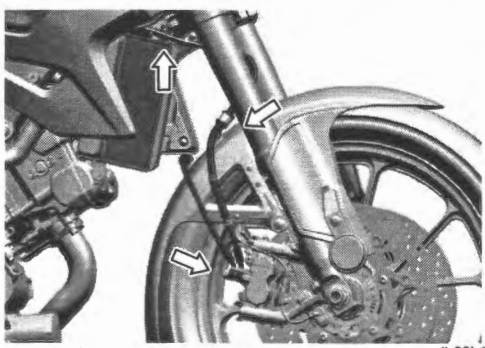

IL06L1020093-01

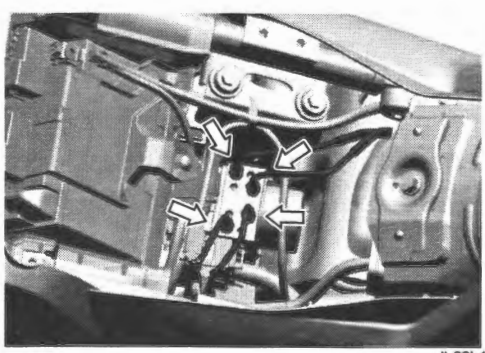

IL06L1020048-01

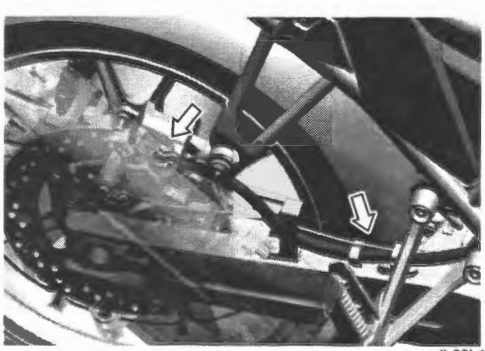

IL06L1020049-01

Replacement

Front Brake Hose

Refer to "Front Brake Hose Routing Diagram" in Section 4A (Page 4A-2).

Removal

1) Drain brake fluid. ☞(Page 0B-23)
2) Remove the air cleaner box. ☞(Page 1D-6)
3) Remove the front brake hoses.

Install

1) Install the front brake hoses.
2) Install the air cleaner box. ☞(Page 1D-6)
3) Bleed air from the front brake system. ☞(Page 0B-23)

Rear Brake Hose

Refer to "Rear Brake Hose Routing Diagram" in Section 4A (Page 4A-7).

Removal

1) Remove the frame front cover. ☞(Page 9D-30)
2) Drain brake fluid. ☞(Page 0B-23)
3) Remove the rear brake hoses.

Installation

1) Install the rear brake hose.
2) Bleed air from the rear brake system. ☞(Page 0B-23)
3) Install the frame front cover. ☞(Page 9D-30)

Brake Fluid

BENL06L20206017

Inspection

1) Keep the motorcycle upright and place the handlebar straight.
2) Check the brake fluid level by observing the lower limit lines (1) on the front and rear brake fluid reservoirs. When the brake fluid level is below the lower limit line, inspect for brake pad wear and leaks and replenish with brake fluid that meets the following specification.

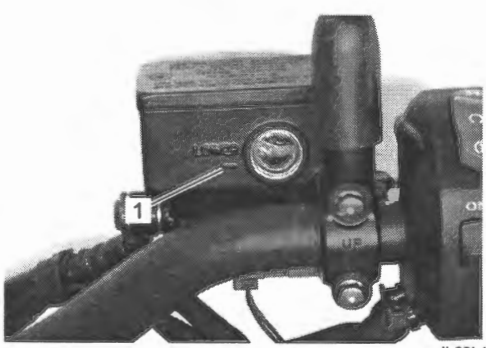

IL06L1020094-01



IL06L1410016-01

Replacement

Front Brake

1) Place the motorcycle on a level surface and keep the handlebar straight.
2) Remove the brake fluid reservoir cap and diaphragm.
3) Suck up the old brake fluid as much as possible.

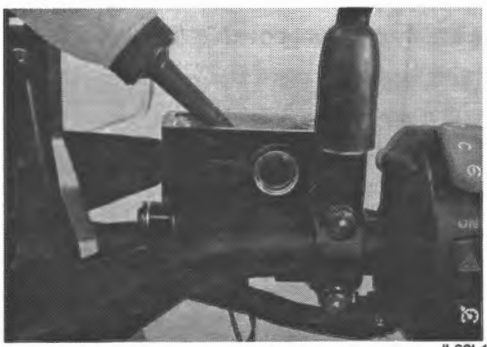

IL06L1410031-01

4) Fill the reservoir with new brake fluid.

   Brake Fluid 99000–23140–D04 (SUZUKI Brake Fluid DOT 4)

5) Attach a clear hose to the air bleeder valve (1) and insert the free end of the hose into a receptacle.
6) Loosen the air bleeder valve, squeeze and release the brake lever and drain the old brake fluid out of the brake system.

NOTE

While bleeding the brake system, replenish the reservoir with the brake fluid as necessary to keep the fluid above the lower level.

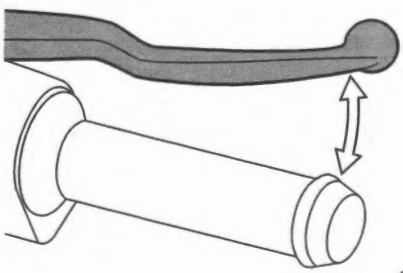

IJ27K1410061-01

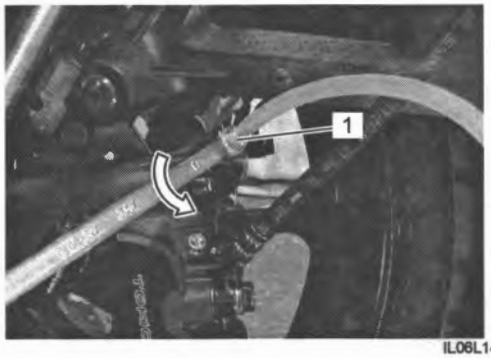

IL06L1410032-01

7) Bleed the air from the front brake system. ☞(Page 4A-12)

Rear Brake

1) Place the motorcycle on a level surface and keep the handlebar straight.
2) Remove the reservoir tank mounting bolt (1) from the reservoir tank bracket.

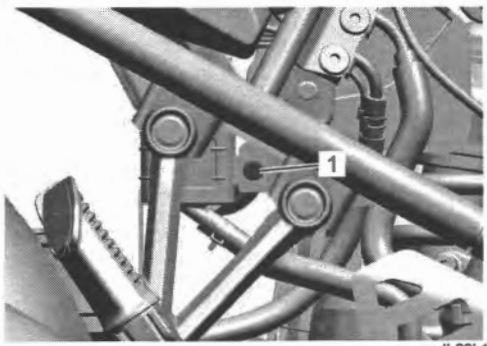

IL06L1410066-01

3) Remove the brake fluid reservoir cap and diaphragm.
4) Install the reservoir tank temporarily.
5) Suck up the old brake fluid as much as possible.
6) Fill the reservoir with new brake fluid.

   Brake Fluid 99000–23140–D04 (SUZUKI Brake Fluid DOT 4)



IL06L1410033-01

7) Attach a clear hose to the air bleeder valve (1) and insert the free end of the hose into a receptacle.
8) Loosen the air bleeder valve, depress and release the brake pedal and drain the old brake fluid out of the brake system.

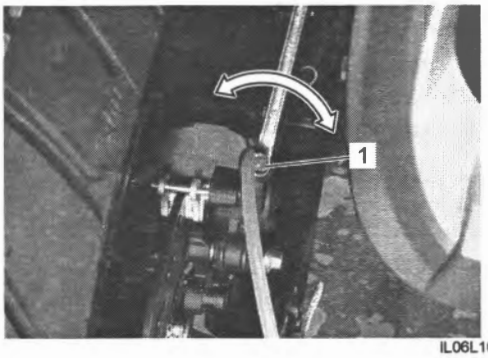

IL06L1020100-01

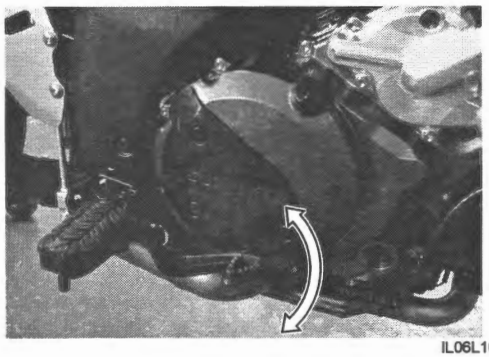

IL06L1020095-01

9) Bleed the air from the rear brake system. ☞(Page 4A-12)

Tires

BENL06L20206018

Wipe the tire clean and check for the following points:

- Nick and rupture on side wall
- Tread separation
- Abnormal, uneven wear on tread
- Surface damage on bead
- Localized tread wear due to skidding (Flat spot)
- Abnormal condition of inner liner

Front tire size
110/80R19M/C 59V, tubeless

Rear tire size
150/70R17M/C 69V, tubeless

Front tire type
BRIDGESTONE A41F F

Rear tire type
BRIDGESTONE A41R F

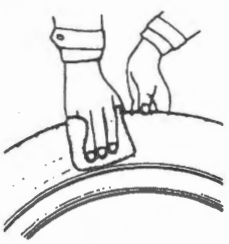

I649G1240042-02

Tire tread condition

Operating the motorcycle with excessively worn tires will decrease riding stability and consequently invite a dangerous situation. It is highly recommended to replace a tire when the remaining depth of tire tread reaches the following specification.

Front tire tread depth
Service limit: 1.6 mm (0.06 in)

Rear tire tread depth
Service limit: 2.0 mm (0.08 in)

Special tool
09900–20805

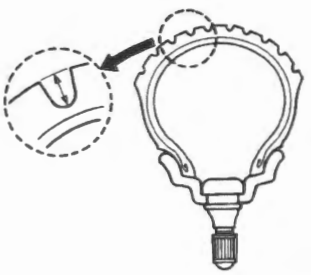

I310G1020068-02

Tire pressure

If the tire pressure is too high or too low, steering will be adversely affected and tire wear increased. Therefore, maintain the correct tire pressure for good roadability or shorter tire life will result. Cold inflation tire pressure is as follows.

Cold inflation tire pressure

	Front	Rear
Solo riding	250 kPa (2.50 kgf/cm^2, 36 psi)	290 kPa (2.90 kgf/cm^2, 42 psi)
Dual riding	250 kPa (2.50 kgf/cm^2, 36 psi)	290 kPa (2.90 kgf/cm^2, 42 psi)

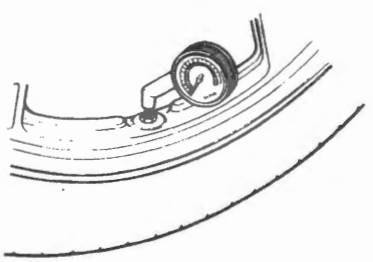

I310G1020069-02

Steering

BENL06L20206019

Inspection

Steering should be adjusted properly for smooth turning of handlebars and safe running. Overtighten steering prevents smooth turning of the handlebars and too loose steering will cause poor stability.

1) Check that there is no play in the front fork.
   a) Support the motorcycle with its front wheel off the ground, grasp the bottoms of the front forks and move the forks back-and-forth to check there is no play in the stem bearings.

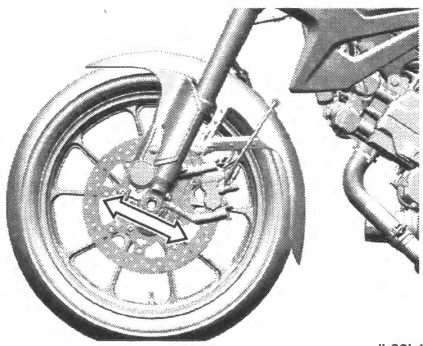

IL06L1020054-02

   b) With the front wheel on the ground and applying the front brake(s), move the handlebar back-and-forth and up-and-down to check there is no play in the stem bearings.

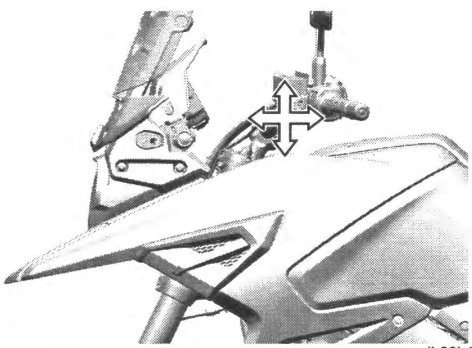

IL06L1020055-01

2) If play is found, readjust the steering. ☞(Page 0B-26)

Adjustment

1) By supporting the motorcycle, lift the front wheel until it is off the floor 20 – 30 mm (0.8 – 1.2 in).
2) Check to make sure that the cables and wire harnesses are properly routed.
3) With the front wheel in the straight ahead state, hitch the spring scale on one handlebar grip end as shown in the figure and read the graduation when the handlebars start moving.

Steering tension initial force
[Standard]: 2 – 5 N (0.21 – 0.50 kgf, 0.45 – 1.12 lbf)

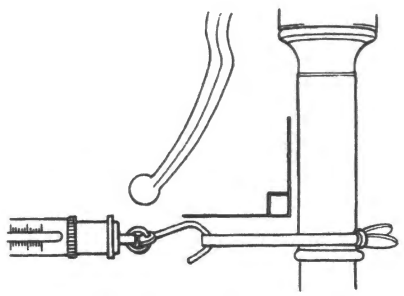

IF04K1620033-01

4) Do the same on the other grip end.
5) If the initial force reading on the scale when the handlebars start turning is either too heavy or too light, adjust the tension until it satisfies the specification as follows.
   a) Remove the side covers. ☞(Page 9D-33)
   b) Remove the handlebars. ☞(Page 6B-3)
   c) First, loosen the front fork upper clamp bolts, steering stem top nut and steering stem locknut, and then adjust the steering stem adjust-nut by loosening or tightening it.

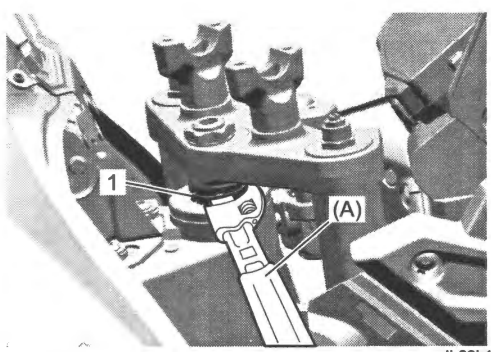

IL06L1020056-01

Special tool
(A): 09910–60620

d) Tighten the steering stem lock-nut, steering stem top nut, front fork upper clamp bolts to the specified torque, and recheck the initial force with the spring scale according to the previously described procedure.

Tightening torque
Steering stem lock-nut: 80 N·m (8.2 kgf-m, 59.0 lbf-ft)
Steering stem top nut: 90 N·m (9.2 kgf-m, 66.5 lbf-ft)
Front fork upper clamp bolt: 23 N·m (2.3 kgf-m, 17.0 lbf-ft)

e) Make sure that the initial force is within the specified range and the steering is not loose.

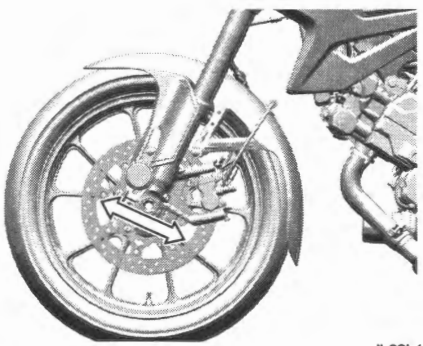

IL06L1020054-02

f) Install the removed parts.

Front Forks

BENL06L20206020

Inspect the front forks for oil leakage, scoring or scratches on the outer surface of the inner tubes (1). Replace any defective parts, if necessary. ☞(Page 2B-4)

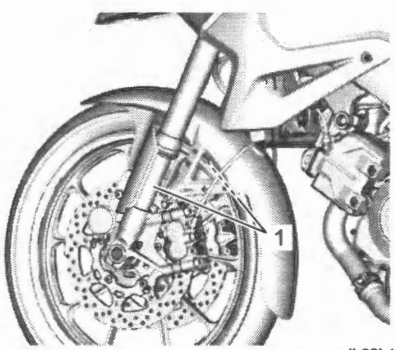

IL06L1020057-01

Rear Suspension

BENL06L20206021

Inspect the rear shock absorber (1) for oil leakage and check that there is no play in the swingarm (2). Replace any defective parts, if necessary.

- Rear shock absorber replace: ☞(Page 2C-2)
- Swingarm pivot shaft and bearing inspection: ☞(Page 2C-13)
- Cushion lever inspection: ☞(Page 2C-7)
- Cushion rod inspection: ☞(Page 2C-8)
- Swingarm inspection: ☞(Page 2C-13)

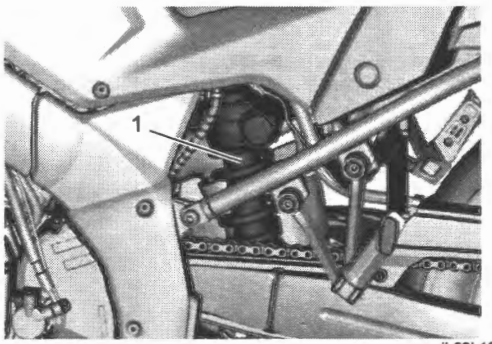

IL06L1020058-01

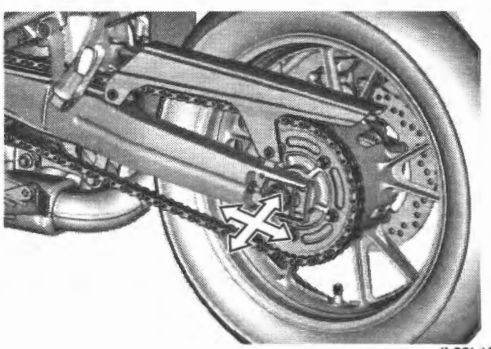

IL06L1020059-01

Chassis Bolts and Nuts

BENL06L20206022

Check that all chassis bolts and nuts are tightened to their specified torque.

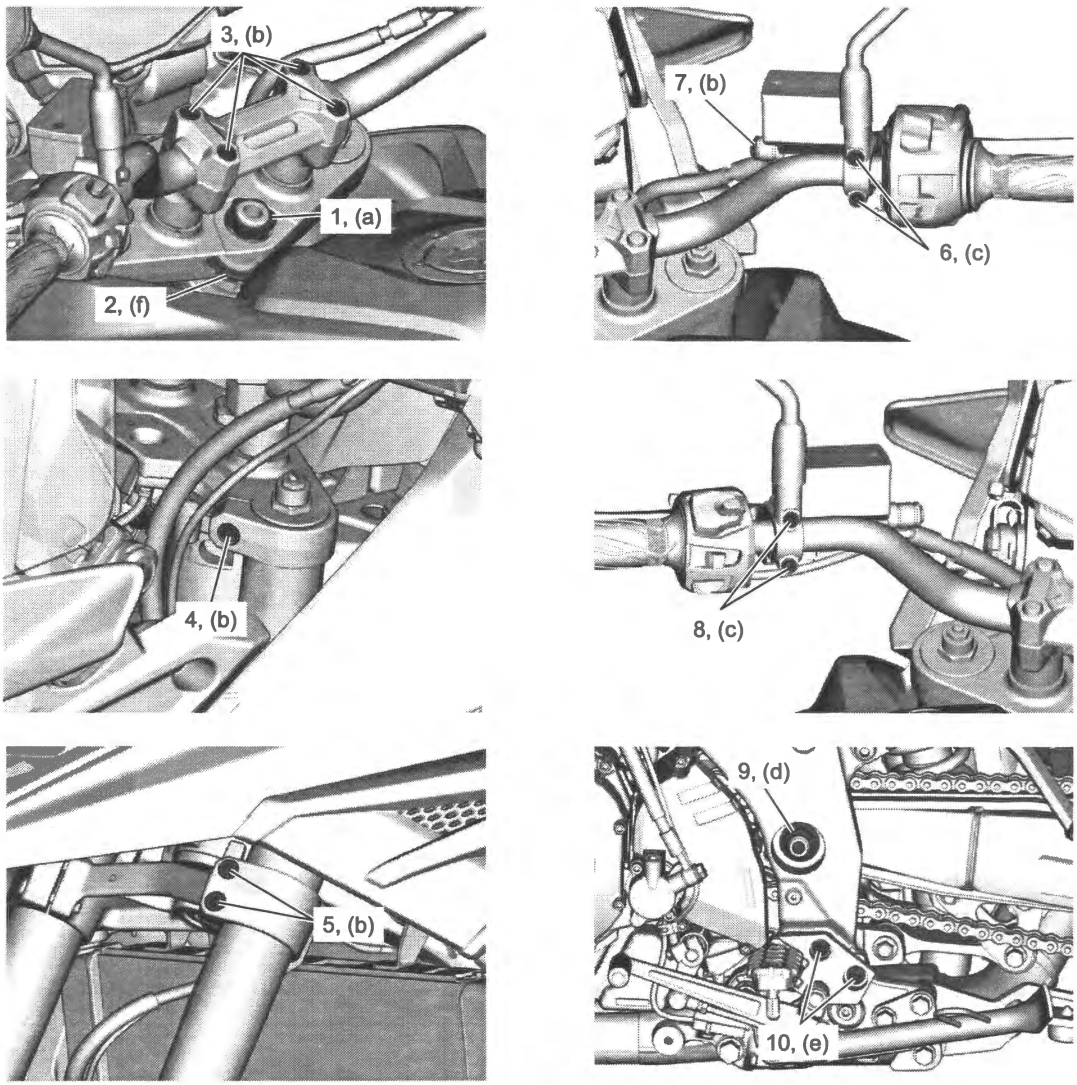

IL06L1020060-01

1. Steering stem top nut	5. Front fork lower clamp bolt	9. Swingarm pivot nut	(c): 10 N·m (1.0 kgf-m, 7.5 lbf-ft)
2. Steering stem lock-nut	6. Front brake master cylinder mounting bolt	10. Front footrest bracket bolt	(d): 100 N·m (10.2 kgf-m, 74.0 lbf-ft)
3. Handlebar clamp bolt	7. Brake hose union bolt	(a): 90 N·m (9.2 kgf-m, 66.5 lbf-ft)	(e): 26 N·m (2.7 kgf-m, 19.5 lbf-ft)
4. Front fork upper clamp bolt	8. Clutch master cylinder mounting bolt	(b): 23 N·m (2.3 kgf-m, 17.0 lbf-ft)	(f): 80 N·m (8.2 kgf-m, 59.0 lbf-ft)

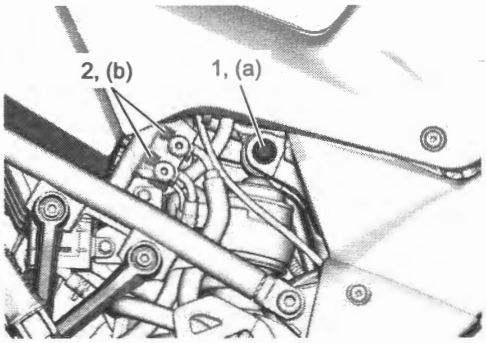

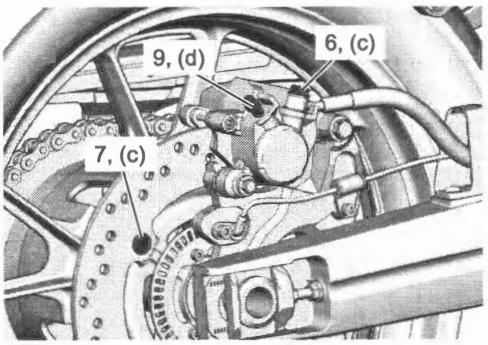

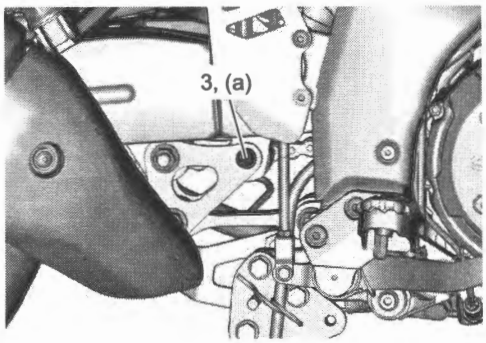

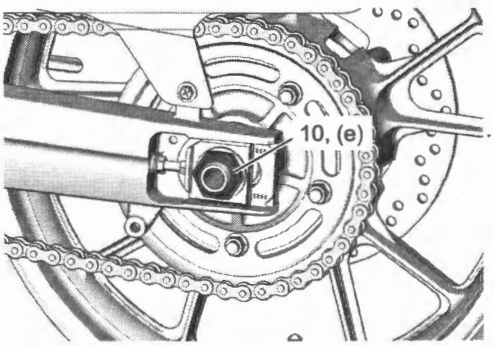

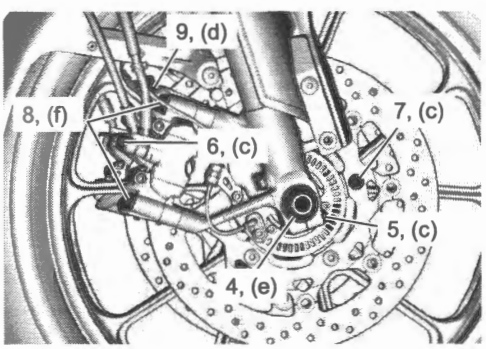

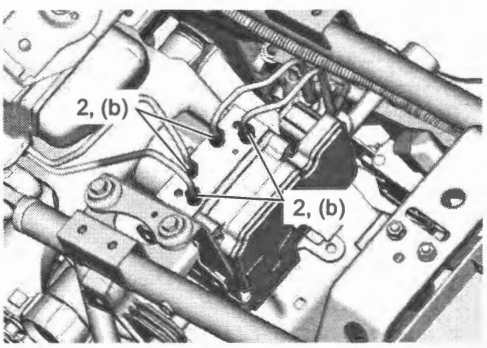

IL06L1020062-01

1. Rear shock absorber upper mounting nut	7. Brake disc bolt	(c): 23 N·m (2.3 kgf-m, 17.0 lbf-ft)
2. Brake pipe flare nut	8. Front brake caliper mounting bolt	(d): 7.5 N·m (0.76 kgf-m, 5.55 lbf-ft)
3. Rear shock absorber lower mounting nut	9. Brake air bleeder valve	(e): 100 N·m (10.2 kgf-m, 74.0 lbf-ft)
4. Front axle nut	10. Rear axle nut	(f): 39 N·m (4.0 kgf-m, 29.0 lbf-ft)
5. Front axle pinch bolt	(a): 50 N·m (5.1 kgf-m, 37.0 lbf-ft)	
6. Brake hose union bolt	(b): 15 N·m (1.5 kgf-m, 11.0 lbf-ft)	

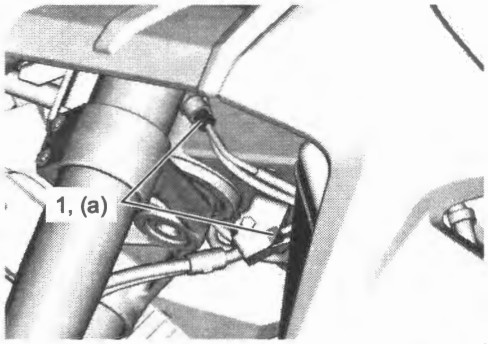

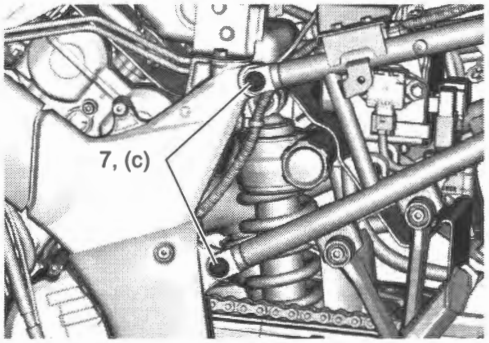

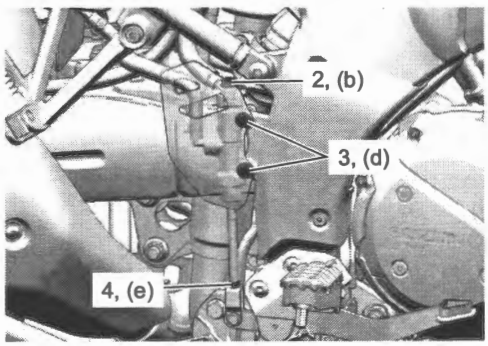

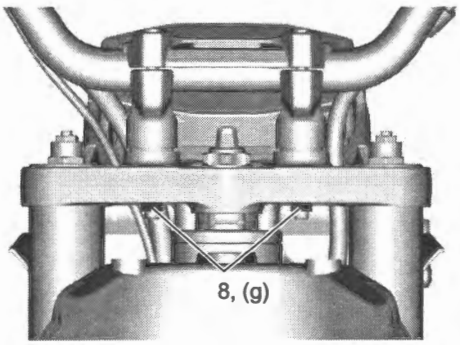

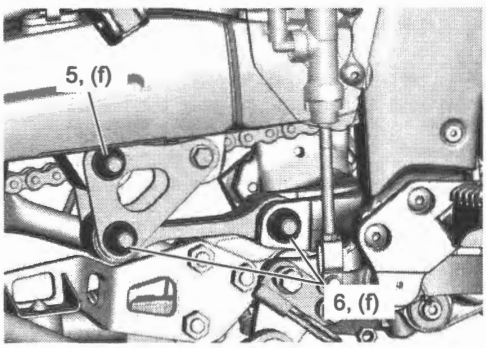

IL06L1020063-01

1. Brake pipe flare nut	6. Cushion rod mounting nut	(c): 50 N·m (5.1 kgf-m, 37.0 lbf-ft)
2. Brake hose union bolt	7. Seat rail mounting bolt	(d): 10 N·m (1.0 kgf-m, 7.5 lbf-ft)
3. Rear brake master cylinder mounting bolt	8. Handlebar holder nut	(e): 18 N·m (1.8 kgf-m, 13.5 lbf-ft)
4. Rear brake master cylinder rod lock-nut	(a): 15 N·m (1.5 kgf-m, 11.0 lbf-ft)	(f): 98 N·m (10.0 kgf-m, 72.5 lbf-ft)
5. Cushion lever mounting bolt	(b): 23 N·m (2.3 kgf-m, 17.0 lbf-ft)	(g): 45 N·m (4.6 kgf-m, 33.5 lbf-ft)

Lubrication

BENL06L20206023

Proper lubrication is important for smooth operation and long life of each working part of the motorcycle. Major lubrication points are indicated as follows.

NOTE

- **Before lubricating each part, clean off any rusty spots and wipe off any grease, oil, dirt or grime.**
- **Lubricate exposed parts which are subject to rust, with a rust preventative spray whenever the motorcycle has been operated under wet or rainy conditions.**

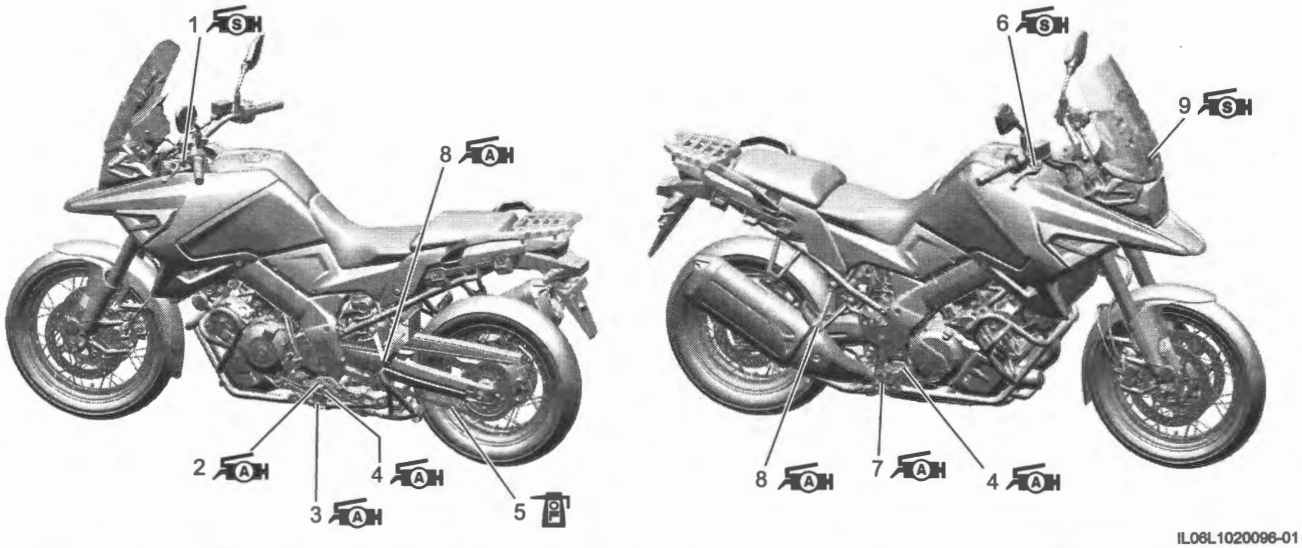

IL06L1020096-01

1. Clutch lever holder	5. Drive chain	9. Wind screen lever hinge
2. Gearshift lever pivot	6. Brake lever holder	: Apply oil.
3. Side-stand pivot and spring hook	7. Brake pedal pivot	: Apply grease.
4. Footrest pivot	8. Pillion footrest	: Apply silicone grease.

Spoke Wheel (DL1050RC)

BENL06L20206024

Spoke

Inspect the spokes for damage and deformation. If any defects are found, replace the spokes with new ones.

Spoke nipple

1) Tap the spokes lightly with screwdriver to check for looseness.

NOTE

A dull sound is heard if the spoke is loose.

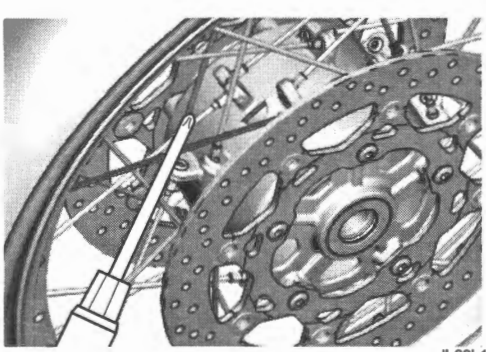

IL06L1020066-04

2) Tighten the spoke nipples (1) so that all spokes have same tension, if necessary.

Tightening torque
Spoke nipple (front wheel) (a): 5 N·m (0.5 kgf-m, 4.0 lbf-ft)
Spoke nipple (rear wheel): 4.5 N·m (0.45 kgf-m, 3.5 lbf-ft)

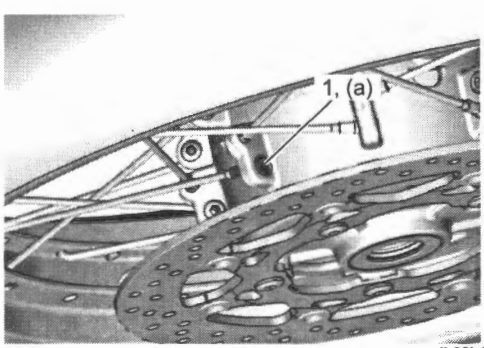

IL06L1020067-03

Specifications

Tightening Torque Specifications

BENL06L20207001

Fastening part	Tightening torque			Note
	N·m	kgf-m	lbf-ft	
Air cleaner cover screw	2.4	0.24	1.8	☞(Page 0B-4)
Exhaust pipe bolt	23	2.3	17.0	☞(Page 0B-4)
Exhaust pipe connecting bolt	18	1.8	13.5	☞(Page 0B-4)
Muffler mounting bolt	30	3.1	22.5	☞(Page 0B-4)
Muffler connecting bolt	18	1.8	13.0	☞(Page 0B-4)
Center exhaust pipe bolt	25	2.5	18.5	☞(Page 0B-4)
Spark plug	11	1.1	8.5	☞(Page 0B-9) / ☞(Page 0B-10) / ☞(Page 0B-10) / ☞(Page 0B-11)
Oil drain plug	23	2.3	17.0	☞(Page 0B-14)
Oil filter	20	2.0	15.0	☞(Page 0B-15)
Rear axle nut	100	10.2	74.0	☞(Page 0B-20)
Chain adjuster lock-nut	22	2.2	16.5	☞(Page 0B-20)
Rear brake master cylinder rod lock-nut	18	1.8	13.5	☞(Page 0B-22)
Steering stem lock-nut	80	8.2	59.0	☞(Page 0B-27)
Steering stem top nut	90	9.2	66.5	☞(Page 0B-27)
Front fork upper clamp bolt	23	2.3	17.0	☞(Page 0B-27)
Spoke nipple (front wheel)	5	0.5	4.0	☞(Page 0B-31)
Spoke nipple (rear wheel)	4.5	0.45	3.5	☞(Page 0B-31)

Reference:
For the tightening torques of fasteners not specified in this page, refer to:
"Fasteners Information" in Section 0C (Page 0C-10)

Special Tools and Equipment

Recommended Service Material

BENL06L20208001

Material	SUZUKI recommended product or Specification		Note
Brake Fluid	SUZUKI Brake Fluid DOT 4	P/No.: 99000–23140–D04	☞(Page 0B-18) / ☞(Page 0B-18) / ☞(Page 0B-24) / ☞(Page 0B-24)

NOTE

Required service material(s) is also described in:
"Lubrication" (Page 0B-31)

Special Tool

BENL06L20208002

09900–20607 Dial gauge (10 x 0.01 mm) ☞(Page 0B-21) / ☞(Page 0B-21)		09900–20701 Dial gauge chuck ☞(Page 0B-21) / ☞(Page 0B-21)	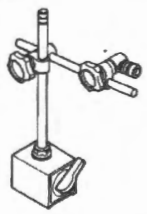
09900–20803 Thickness gauge ☞(Page 0B-6) / ☞(Page 0B-6)	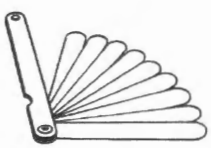	09900–20805 Tire depth gauge ☞(Page 0B-25)	
09910–60620 Adjustable wrench ☞(Page 0B-26)	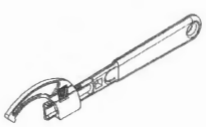	09912–66310 Micrometer (0 - 25 mm) ☞(Page 0B-20) / ☞(Page 0B-21)	
09915–40620 Oil filter wrench ☞(Page 0B-15) / ☞(Page 0B-15)		09917–47011 Vacuum pump gauge set ☞(Page 0B-13) / ☞(Page 0B-14)	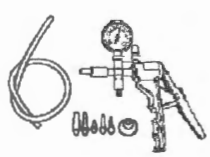
09930–10190 Spark plug socket (14 mm : 3/8 sq.) ☞(Page 0B-8) / ☞(Page 0B-9) / ☞(Page 0B-9) / ☞(Page 0B-10) / ☞(Page 0B-10) / ☞(Page 0B-10) / ☞(Page 0B-11)	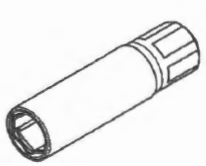		

Service Data

Precautions

Precautions for Service Data

BENL06L20300001

NOTE

Specifications and service data are subject to change without notice.

Specifications

Specifications

BENL06L20307001

Dimensions and curb mass

Item	Specification	Remark
Overall length	2265 mm (89.2 in)	—
Overall width	940 mm (37.0 in)	DL1050RC
	870 mm (34.3 in)	DL1050RQ
Overall height	1465-1510 mm (57.7 – 59.4 in)	DL1050RC
	1470-1515 mm (57.9 – 59.6 in)	DL1050RQ
Wheelbase	1555 mm (61.2 in)	—
Ground clearance	160 mm (6.3 in)	DL1050RC
	165 mm (6.5 in)	DL1050RQ
Seat height	850 mm (33.5 in)	DL1050RC
	855 mm (33.7 in)	DL1050RQ
Curb mass	247 kg (545 lb)	DL1050RC
	236 kg (520 lb)	DL1050RQ

Engine

Item	Specification	Remark
Type	4-stroke, liquid-cooled, DOHC, 90-degree V-twin	—
Number of cylinders	2	—
Bore	100.0 mm (3.937 in)	—
Stroke	66.0 mm (2.598 in)	—
Displacement	1037 cm3 (63.3 cu. in)	—
Compression ratio	11.5 : 1	—
Fuel system	Fuel injection system	—
Air cleaner	Paper element	—
Starter system	Electric	—
Lubrication system	Wet sump	—
Idle speed	1200 – 1400 r/min	—

Drive train

Item		Specification	Remark
Clutch		Wet multi-plate	—
Transmission		6-speed constant mesh	—
Gearshift pattern		1-down, 5-up	—
Primary reduction ratio		1.838 (57/31)	—
Gear ratios	Low	3.000 (36/12)	—
	2nd	1.933 (29/15)	—
	3rd	1.500 (27/18)	—
	4th	1.227 (27/22)	—
	5th	1.086 (25/23)	—
	Top	1.000 (24/24)	—
Final reduction ratio		2.411 (41/17)	—
Drive chain		RK525SMOZ8, 116 links	—

Chassis

Item	Specification	Remark
Front suspension	Telescopic, coil spring, oil damped	—
Rear suspension	Link type, coil spring, oil damped	—
Front fork stroke	160 mm (6.30 in)	—
Rear wheel travel	160 mm (6.30 in)	—
Steering angle	36° (right & left)	—
Caster	25° 30'	DL1050RC
	25° 40'	DL1050RQ
Trail	109 mm (4.29 in)	DL1050RC
	110 mm (4.33 in)	DL1050RQ
Turning radius	3.0 m (9.9 ft)	—
Front brake	Disc brake, twin	—
Rear brake	Disc brake	—
Front tire	110/80R19M/C 59V, tubeless	—
Rear tire	150/70R17M/C 69V, tubeless	—

Electrical

Item		Specification	Remark
Ignition type		Electronic ignition (Transistorized)	—
Spark plug		NGK LMAR8BI-9	—
Battery		12 V 40.3 kC (11.2 Ah)/10 HR	—
Generator		Three-phase A.C. generator	—
Main fuse		30 A	—
Fuse		15/15/10/10/10/10/10/3 A	—
ABS fuse		25/15 A	DL1050RC
		25/10 A	DL1050RQ
Headlight	Hi beam	LED	—
	Low beam	LED	—
Position light		LED	—
Brake light/Tail light		LED	—
Turn signal light		LED	DL1050RC
		12 V 21 W × 2	DL1050RQ
License plate light		12 V 5 W	—
Engine rpm indicator light		LED	—
Turn signal indicator light		LED	—
Traction control indicator light		LED	—
Engine coolant temperature / oil pressure / battery voltage warning indicator light		LED	—
Freeze indicator light		LED	—
Hi beam indicator light		LED	—
Master warning indicator light		LED	—
Cruise control indicator light (If equipped)		LED	—
Malfunction indicator light		LED	—
Neutral indicator light		LED	—
ABS indicator light		LED	—
Immobilizer indicator light		LED	If equipped

Capacities

Item		Specification	Remark
Fuel tank		20.0 L (5.3 US gal, 4.4 Imp gal)	—
Engine oil	Oil change	2700 ml (2.9 US qt, 2.4 Imp qt)	—
	With filter change	3000 ml (3.2 US qt, 2.6 Imp qt)	—
Engine coolant		2130 ml (2.3 US qt, 1.9 Imp qt)	—

Service Data

BENL06L20307002

Emission Control Devices

Item	Specification	Standard	Limit / Note
EVAP system purge control solenoid valve power supply voltage		Battery voltage	
EVAP system purge control solenoid valve resistance	20 °C (68 °F)	30 – 34 Ω	
PAIR control solenoid valve power supply voltage resistance		Battery voltage	
PAIR control solenoid valve resistance	20 – 30 °C (68 – 86 °F)	20 – 24 Ω	

Engine Electrical Devices

Item	Specification		Standard	Limit / Note
Idle speed (When engine is warmed)			1200 – 1400 r/min	—
Fast idle speed			1400 – 1700 r/min	—
IAP sensor power supply voltage (#1 & #2)			4.5 – 5.5 V	—
IAP sensor output voltage (#1 & #2)	Idle speed at 1 atm.		Approx. 0.789 – 4.0 V	—
IAT sensor power supply voltage			4.5 – 5.5 V	—
IAT sensor resistance	0 °C (32 °F)		5400 – 6600 Ω	—
	80 °C (176 °F)		290 – 390 Ω	—
ECT sensor resistance	–20 °C (–4 °F)		13840 – 16330 Ω	—
	20 °C (68 °F)		2320 – 2590 Ω	—
	80 °C (176 °F)		310 – 326 Ω	—
ECT sensor power supply voltage			4.5 – 5.5 V	—
TP sensor power supply voltage (#1 & #2)			4.5 – 5.5 V	—
TP sensor output voltage (#1 & #2)	Main	Closed	3.66 – 3.76 V	—
	Sub		4.26 – 4.36 V	—
	Main	Opened	0.65 – 0.75 V	—
	Sub		1.25 – 1.35 V	—
HO2 sensor output voltage	Idle speed		0 – 1.0 V	—
	6000 r/min		0 – 1.0 V	—
HO2 sensor heater power supply voltage			Battery voltage	—
HO2 sensor heater resistance	23 °C (73.4 °F)		11.5 – 17.5 Ω	—
CKP sensor peak voltage	2.0 V or more		168 – 252 Ω	—
CKP sensor resistance	20 °C (68 °F)		168 – 252 Ω	—
TO sensor power supply voltage			4.5 – 5.5 V	—
TO sensor voltage	Normal		0.4 – 1.4 V	—
	Leaning 45°		3.7 – 4.4 V	—
TO sensor resistance			16500 – 22300 Ω	—
Accelerator position sensor power supply voltage			4.5 – 5.5 V	—
Accelerator position sensor output voltage	Main	Closed	0.50 – 0.62 V	—
	Sub		0.84 – 0.96 V	—
	Main	Opened	3.18 – 3.30 V	—
	Sub		4.19 – 4.31 V	—
	Main	Cruise control cancel switch position	0.30 – 0.42 V	If equipped
	Sub		0.64 – 0.76 V	If equipped
Throttle valve motor relay power supply voltage			Battery voltage	
Throttle valve motor resistance	20 °C (68 °F)		0.3 – 100 Ω	
GP switch voltage			0.6 V or more	From 1st to Top
Throttle body I.D. No.			06L0	—
Throttle body bore size			49 mm (1.9 in)	—

Engine Mechanical

Item	Specification	Standard	Limit / Note
Compression pressure (Automatic de-comp. actuated)		1100 – 1500 kPa (11 – 15 kgf/cm², 160 – 218 psi)	Limit: 800 kPa (8kgf/cm², 116psi)
Compression pressure difference			200 kPa(2 kgf/cm², 28 psi)
Cam height	IN.	36.58 – 36.63 mm (1.440 – 1.442 in)	36.28 mm (1.428 in)
	EX.	35.88 – 35.93 mm (1.413 – 1.454 in)	35.58 mm (1.401 in)
Camshaft journal oil clearance	IN. & EX.	0.019 – 0.053 mm (0.0007 – 0.0021 in)	0.150 mm (0.0059 in)
Camshaft journal holder I.D.	IN. & EX.	22.012 – 22.025 mm (0.8666 – 0.8671 in)	—
Camshaft journal O.D.	IN. & EX.	21.972 – 21.993 mm (0.8650 – 0.8659 in)	—
Camshaft runout	IN. & EX.	—	0.10 mm (0.004 in)
Valve clearance (When engine is cold)	IN.	0.10 – 0.20 mm (0.004 – 0.008 in)	—
	EX.	0.20 – 0.30 mm (0.008 – 0.012 in)	—
Valve diameter	IN.	36 mm (1.4 in)	—
	EX.	33 mm (1.3 in)	—
Valve stem runout	IN. & EX.	—	0.05 mm (0.002 in)
Valve head radial runout	IN. & EX.	—	0.03 mm (0.001 in)
Valve head thickness	IN. & EX.	—	0.5 mm (0.02 in)
Valve stem deflection	IN. & EX.	—	0.35 mm (0.014 in)
Valve stem O.D.	IN.	5.475 – 5.490 mm (0.2156 – 0.2161 in)	—
	EX.	5.455 – 5.470 mm (0.2148 – 0.2154 in)	—
Valve seat width	IN.	1.17 – 1.37 mm (0.046 – 0.054 in)	—
	EX.	1.31 – 1.51 mm (0.052 – 0.059 in)	—
Valve guide I.D.	IN. & EX.	5.500 – 5.512 mm (0.2165 – 0.2170 in)	—
Valve guide to valve stem clearance	IN.	0.010 – 0.037 mm (0.0004 – 0.0015 in)	—
	EX.	0.030 – 0.057 mm (0.0012 – 0.0022 in)	—
Valve spring free length	IN. & EX.	—	39.6 mm (1.56 in)
Valve spring preload when compressed to 35.6 mm (1.40 in)	IN. & EX.	197 – 227 N(20.1 – 23.1 kgf, 44.3 – 51.0 lbf)	—
Cylinder head distortion		—	0.05 mm (0.002 in)
Cylinder distortion		—	0.05 mm (0.002 in)
Cylinder bore		100.000 – 100.015 mm (3.9370 – 3.9376 in)	No nicks or Scratches
Piston diameter		99.980 – 99.995 mm (3.9362 – 3.9368 in) Measure at 10 mm (0.4 in) from the skirt end.	99.880 mm (3.9323 in)
Piston to cylinder clearance		0.015 – 0.025 mm (0.0006 – 0.0010 in)	0.120 mm (0.0047 in)
Piston ring to groove clearance	1st	—	0.180 mm (0.0071 in)
	2nd	—	0.150 mm (0.0059 in)
Piston ring groove width	1st	0.83 – 0.86 mm (0.0327 – 0.0339 in)1.25 – 1.28 mm (0.0492 – 0.0504 in)	—
	2nd	1.01 – 1.03 mm (0.0398 – 0.0406 in)	—
	Oil	2.01 – 2.03 mm (0.0791 – 0.0799 in)	—
Piston ring thickness	1st	0.76 – 0.81 mm (0.0299 – 0.0319 in)1.08 – 1.10 mm (0.0425 – 0.0433 in)	—
	2nd	0.97 – 0.99 mm (0.0382 – 0.0390 in)	—
Piston ring free end gap	1st	Approx. 11.0 mm (0.43 in)	8.8 mm (0.35 in)
	2nd	Approx. 13.9 mm (0.55 in)	11.1 mm (0.43 in)
Piston ring end gap	1st	0.10 – 0.25 mm (0.004 – 0.010 in)	0.50 mm (0.020 in)
	2nd	0.30 – 0.45 mm (0.012 – 0.018 in)	0.70 mm (0.028 in)
Piston pin bore I.D.		22.002 – 22.008 mm (0.8662 – 0.8665 in)	22.030 mm (0.8673 in)
Piston pin O.D.		21.995 – 22.000 mm (0.8659 – 0.8661 in)	21.980 mm (0.8654 in)
Conrod small end I.D.		22.010 – 22.018 mm (0.8665 – 0.8668 in)	22.040 mm (0.8677 in)
Conrod big end side clearance		0.17 – 0.32 mm (0.007 – 0.013 in)	0.50 mm (0.020 in)
Conrod big end width		21.95 – 22.00 mm (0.864 – 0.866 in)	—
Crank pin width		44.17 – 44.22 mm (1.739 – 1.741 in)	—

Item	Specification	Standard	Limit / Note
Conrod big end oil clearance		0.032 – 0.056 mm (0.0013 – 0.0022 in)	0.080 mm (0.0031 in)
Conrod big end I.D.		48.000 – 48.016 mm (1.8898 – 1.8904 in)	—
Crank pin O.D.		44.976 – 45.000 mm (1.7707 – 1.7717 in)	—
Crank pin bearing thickness		1.480 – 1.496 mm (0.0583 – 0.0589 in)	—
Crankshaft journal O.D.		47.985 – 48.000 mm (1.8892 – 1.8898 in)	—
Crankshaft journal oil clearance		0.023 mm (0.0009 in) or less	0.080 mm (0.0031 in)
Crankcase journal I.D.		52.000 – 52.018 mm (2.0472 – 2.0479 in)	—
Crankcase journal bearing thickness		1.999 – 2.008 mm (0.0787 – 0.0791 in)	—
Crankshaft journal holder width		25.2 – 25.4 mm (0.99 – 1.00 in)	—
Crankshaft journal width		25.50 – 25.55 mm (1.004 – 1.006 in)	—
Crankshaft runout		—	0.05 mm (0.002 in)

Engine Lubrication System

Item	Specification	Standard	Limit / Note
Oil pressure (at 60 °C, 140 °F)	3000 r/min	400 – 700 kPa (4 – 7 kgf/cm^2, 57 – 100 psi)	—
Necessary amount of engine oil	Oil change	2700 ml (2.9 US qt, 2.4 Imp qt)	—
	Oil and filter change	3000 ml (3.2 US qt, 2.6 Imp qt)	—
	Engine overhaul	3500 ml (3.7 US qt, 3.1 Imp qt)	—

Cooling System

Item	Specification	Standard	Limit / Note
Engine coolant	Reservoir tank side	Approx. 230 ml (0.24 US qt, 0.20 Imp qt)	—
	Engine side	Approx. 1900 ml (2.0 US qt, 1.6 Imp qt)	—
Radiator cap valve opening pressure		108.0 – 137.4 kPa (1.1 – 1.4 kgf/cm^2, 15.7 – 19.9 psi)	—
Cooling fan operating temperature	ON→OFF	Approx. 100 °C (212 °F)	—
	OFF→ON	Approx. 105 °C (221 °F)	—
Thermostat valve opening temperature		86.5 – 89.5 °C (188 – 193 °F)	—
Thermostat valve lift		Over 8 mm (0.31 in) at 100 °C (212 °F)	—

Fuel System

Item	Specification	Standard	Limit / Note
Fuel pressure		289 – 299 kPa (2.9 – 3.0 kgf/cm^2, 41.9 – 43.3 psi)	—
Fuel pump discharge amount per 10 seconds		166 ml (5.61 US oz, 5.84 Imp oz) or more	—

Ignition System

Item	Specification	Standard	Limit / Note
Firing order		1.2	—
Spark plug	Type	NGK: LMAR8BI-9	—
	Gap	0.8 – 0.9 mm (0.031 – 0.035 in)	—
Spark performance		Over 8 mm (0.3 in) at 1 atm.	—
Ignition coil primary peak voltage		150 V or more	—
Ignition coil resistance	Primary	3.0 Ω – 4.2 Ω	(+) Terminal – (–) Terminal
	Secondary	24000 Ω – 36000 Ω	(+) Terminal – Plug cap

Starting System

Item	Specification	Standard	Limit / Note
Starter motor brush length		12 mm (0.47 in)	6.5 mm (0.26 in)
Starter relay resistance		3 – 6 Ω	—
Side-stand switch voltage	ON (Side-stand retracted)	0.4 – 0.6 V	—
	OFF (Side-stand on the ground)	1.4 V or more	—
Starter torque limiter slip torque		20 – 45 N·m (2.0 – 4.5 kgf-m, 14.5 – 32.5 lbf-ft)	—

Charging System

Item	Specification	Standard	Limit / Note
Battery leakage current		3 mA or less	—
Regulated voltage (charging output)	5000 r/min	13.5 – 15.0 V	—
Generator coil resistance		0.2 – 0.6 Ω	—
Generator no-load voltage (When engine is cold)	5000 r/min	50 V (AC) or more	—
Recharging time	Standard charging	1.1 A for 5 to 10 hours	—
	Fast charging	5.5 A for 1 hours	—
Generator maximum output	5000 r/min	Approx. 425 W	—
Battery	Type designation	FTZ14S	—
			—
	Capacity	12 V 40.3 kC (11.2 Ah)/10 HR	—
			—

Front Suspension

Item	Specification	Standard	Limit / Note
Front fork inner tube O.D.		43 mm (1.7 in)	—
Front fork oil level (Without spring, inner tube fully compressed)		113mm (4.45 in)	—
Front fork spring free length		328 mm (12.9 in)	321mm (12.7 in)
Front fork oil capacity (Each leg)		597 ml (20.19 US oz, 21.01 Imp oz)	—
Front fork spring adjuster		11 mm (0.43 in)	—
Front fork damping force adjuster	Rebound	8 clicks counterclockwise from stiffest position	—
	Compression	8 clicks counterclockwise from stiffest position	—

Rear Suspension

Item	Specification	Standard	Limit / Note
Rear shock absorber spring pre-load		11th clicks clockwise from softest position	—
Rear shock absorber damping force adjuster	Rebound	1.25 turns counterclockwise from stiffest position	—
Swingarm pivot shaft runout			0.3 mm (0.012 in)

Wheels and Tires

Item	Specification		Standard	Limit / Note
Wheel rim runout	Front	Axial & Radial	—	2.0 mm (0.08 in)
	Rear	Axial & Radial	—	2.0 mm (0.08 in)
Wheel axle runout	Front & Rear		—	0.25 mm (0.010 in)
Tire size	Front		110/80R19M/C 59V	—
	Rear		150/70R17M/C 69V	—
Tire type	Front		BRIDGESTONE: A41F F	—
	Rear		BRIDGESTONE: A41R F	—
Tire tread depth (Recommended depth)	Front		—	1.6 mm (0.06 in)
	Rear		—	2.0 mm (0.08 in)
Cold inflation tire pressure (Solo riding)	Front		250 kPa (2.50 kgf/cm^2, 36 psi)	—
	Rear		290 kPa (2.90 kgf/cm^2, 42 psi)	—
Cold inflation tire pressure (Dual riding)	Front		250 kPa (2.50 kgf/cm^2, 36 psi)	—
	Rear		290 kPa (2.90 kgf/cm^2, 42 psi)	—
Wheel rim size	Front		19 M/C x MT 2.50	—
	Rear		17 M/C x MT 4.00	—

Drive Chain / Drive Train / Drive Shaft

Item	Specification	Standard	Limit / Note
Drive chain	Type	RK525SMOZ8	—
	Links	116 links	—
	20-pitch length	—	319.4 mm (12.57 in)
Drive chain slack (on side-stand)		20 – 30 mm (0.8 – 1.2 in)	—

Brake Control System and Diagnosis

Item	Specification	Standard	Limit / Note
Rear brake pedal height		20 – 30 mm (0.8 – 1.2 in)	—
Master cylinder bore / piston diameter	Front & Rear	Approx. 14.0 mm (0.55 in)	—

Front Brakes

Item	Specification	Standard	Limit / Note
Brake disc thickness		4.8 – 5.2 mm (0.19 – 0.20 in)	4.5 mm (0.18 in)
Brake disc runout		—	0.30 mm (0.012 in)
Brake caliper cylinder bore / piston diameter		Approx. 30.3 mm (1.19 in) Approx. 32.1 mm (1.26 in)	—

Rear Brakes

Item	Specification	Standard	Limit / Note
Brake disc thickness		4.8 – 5.2 mm (0.19 – 0.20 in)	4.5 mm (0.18 in)
Brake disc runout		—	0.30 mm (0.012 in)
Brake caliper cylinder bore / piston diameter		Approx. 38.2 mm (1.50 in)	—

ABS

Item	Specification	Standard	Limit / Note
Wheel speed sensor – Sensor rotor clearance	Front	0.58 – 1.55 mm (0.023 – 0.061 in)	—
	Rear	0.58 – 1.55 mm (0.023 – 0.061 in)	—
IMU power supply voltage		Battery voltage	

Manual Transmission

Item	Specification	Standard	Limit / Note
Primary reduction ratio		1.838 (57/31)	—
Final reduction ration		2.411 (41/17)	—
Gear ratios	Low	3.000 (36/12)	—
	2nd	1.933 (29/15)	—
	3rd	1.500 (27/18)	—
	4th	1.227 (27/22)	—
	5th	1.086 (25/23)	—
	Top	1.000 (24/24)	—
Gearshift fork to groove clearance	No.1, 2	0.1 – 0.3 mm (0.004 – 0.012 in)	0.50 mm (0.020 in)
Gearshift fork groove width	No.1, 2	5.0 – 5.1 mm (0.197 – 0.201 in)	—
Gearshift fork thickness	No.1, 2	4.8 – 4.9 mm (0.189 – 0.193 in)	—
Gearshift lever height		20 – 30 mm (0.8 – 1.2 in)	—

Clutch

Item	Specification	Standard	Limit / Note
Drive plate thickness	No.1, 2	3.72 – 3.88 mm (0.146 – 0.153 in)	3.42 mm (0.135 in)
Drive plate claw width	No.1, 2	13.90 – 14.00 mm (0.547 – 0.551 in)	13.10 mm (0.516 in)
Driven plate distortion	No.1, 2, 3, 4	—	0.10 mm (0.004 in)
Clutch spring free length		45.7 mm (1.80 in)	43.5 mm (1.71 in)
Master cylinder bore / piston diameter		Approx. 12.7 mm (0.500 in)	—
Release cylinder bore / piston diameter		Approx. 35.7 mm (1.41 in)	—

Steering / Handlebar

Item	Specification	Standard	Limit / Note
Steering tension initial force		2 – 5 N (0.2 – 0.5 kgf, 0.4 – 1.1 lbf)	—

Wiring Systems

Item	Specification		Standard	Limit / Note
Fuse size	Headlight	Hi	10 A	—
		Lo	10 A	—
	Fuel		10 A	—
	Ignition		10 A	—
	Signal		15 A	—
	Fan		15 A	—
	Main		30 A	—
	Park		10A	—
	P-source		3 A	—
	ABS motor		25 A	—
	ABS valve		15 A	DL1050RC
			10 A	DL1050RQ

Lighting Systems

Item	Specification	Standard	Limit / Note
Headlight	Hi	LED	—
	Lo	LED	—
Position light		LED	—
Turn signal light		LED	DL1050RC
		12 V 21 W × 2	DL1050RQ
Brake light/Tail light		LED	—
License plate light		12 V 5 W	—

Combination Meter / Fuel Meter / Horn

Item	Specification	Standard	Limit / Note
Engine rpm indicator light		LED	—
Turn signal indicator light		LED	—
Traction control indicator light		LED	—
Engine coolant temperature / oil pressure / battery voltage warning indicator light		LED	—
Freeze indicator light		LED	—
Hi beam indicator light		LED	—
Master warning indicator light		LED	—
Cruise control indicator light (If equipped)		LED	—
Malfunction indicator light		LED	—
Neutral indicator light		LED	—
ABS indicator light		LED	—
Immobilizer indicator light		LED	If equipped
Ambient air temperature sensor resistance	–20 °C (–4 °F)	13779 – 19083 Ω	—
	–10 °C (14 °F)	8100 – 10609 Ω	—
	0 °C (32 °F)	4928 – 6125 Ω	—
	10 °C (50 °F)	3089 – 3656 Ω	—
	20 °C (68 °F)	1992 – 2251 Ω	—
	25 °C (77 °F)	1615 – 1785 Ω	—
	30 °C (86 °F)	1290 – 1456 Ω	—
	40 °C (104 °F)	838 – 986 Ω	—

Fasteners Information

BENL06L20307003

Metric Fasteners

Most of the fasteners used for this vehicle are JIS-defined and ISO-defined metric fasteners. When replacing any fasteners, it is most important that replacement fasteners are of the correct diameter, thread pitch and strength.

NOTICE

Combining male and female fasteners with different thread pitches will damage both fasteners.
It is important to note that, even when the nominal diameter (1) of the threads is the same, JIS-defined and ISO-defined fasteners may be different in thread pitch (2) or width across flats (3). Refer to the following table for these differences.
Before installing a fastener, check it for correct thread pitch and then, screw it in or on the mating fastener by hand. If the fastener is too tight to turn by hand, its thread pitch may be different from that of the mating fastener.

JIS-TO-ISO main fasteners comparison table

		Nominal diameter				
		M6	M8	M10	M12	M14
JIS	Thread pitch	1.0	1.25	1.25	1.25	1.5
	Width across flats	10	12	14	17	19
ISO	Thread pitch	1.0	1.25	1.5	1.5	1.5
	Width across flats	10	13	16	18	21

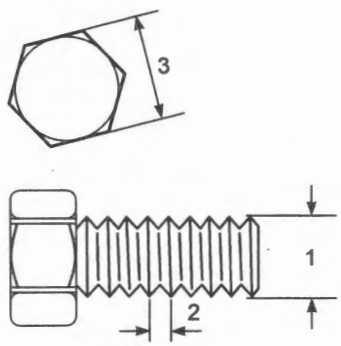

IE31J1030001-02

Fastener Strength Identification

Most commonly used strength classes of metric fasteners are 4T, 6.8, 7T and 8.8. Strength class is indicated by a number or radial line(s) embossed on the head of each bolt. Some metric nuts have a punched number, 6 or 8 on their end surfaces. Figure shows different strength markings.
When replacing metric fasteners, use bolts and nuts of the same strength class as or higher class than the original bolts and nuts. It is also important to select replacement fasteners of the correct diameter and thread pitch. Correct replacement bolts and nuts are available as SUZUKI spare parts.
Metric bolts and nuts: Strength class numbers or marks (The larger the number, the greater the strength).

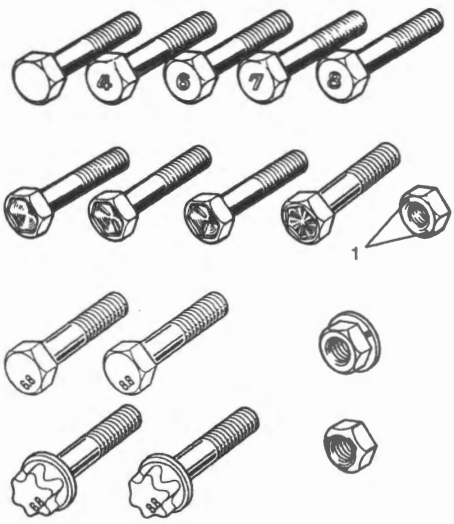

IE31J1030002-01

1. Nut strength identification

Standard Tightening Torques

Each fastener should be tightened to the torque specified in each section. If no torque description or specification is provided in the relevant section, refer to the following tightening torque chart for the applicable torque for each fastener. When a fastener of greater strength than the original one is used, use the torque specified for the original fastener.

NOTE

- **For flanged bolts, flanged nuts and self-locking nuts of the 4T and 7T strength classes, add 10% to the applicable tightening torques given in the following chart.**
- **The following chart is applicable only where the fastened parts are made of steel or light alloy.**

Tightening torque chart

Strength	Unit	Thread diameter (Nominal diameter) (mm)								
		4	5	6	8	10	12	14	16	18
Fastener of strength class equivalent to 4T	N·m	1.5	3.0	5.5	13	29	45	65	105	160
	kgf-m	0.15	0.30	0.55	1.3	2.9	4.5	6.5	10.5	16
	lbf-ft	1.0	2.5	4.0	9.5	21.0	32.5	47.0	76.0	116.0
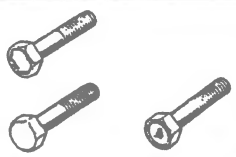 IE31J1030003-01										
Fastener of strength class equivalent to 6.8	N·m	2.4	4.7	8.4	20	42	80	125	193	280
	kgf-m	0.24	0.47	0.84	2.0	4.2	8.0	12.5	19.3	28
	lbf-ft	2.0	3.5	6.0	14.5	30.5	58.0	90.5	139.5	202.5
 IE31J1030004-01										
Flanged fastener of strength class equivalent to 6.8 *: Self-locking nut (6 strength)	N·m	2.4	4.9	8.8	21	44	84	133	203	298
	kgf-m	0.24	0.49	0.88	2.1	4.4	8.4	13.3	20.3	29.8
	lbf-ft	2.0	3.5	6.5	15.5	32.0	61.0	96.5	147.0	215.5
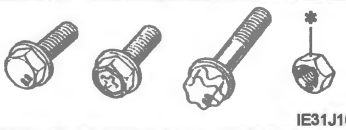 IE31J1030005-01										
Fastener of strength class equivalent to 7T	N·m	2.3	4.5	10	23	50	85	135	210	240
	kgf-m	0.23	0.45	1.0	2.3	5.0	8.5	13.5	21	24
	lbf-ft	2.0	3.5	7.5	17.0	36.5	61.5	98.0	152.0	174.0
 IE31J1030006-01										
Fastener of strength class equivalent to 8.8 (bolt) or 8 (nut)	N·m	3.1	6.3	11	27	56	105	168	258	373
	kgf-m	0.31	0.63	1.1	2.7	5.6	10.5	16.8	25.8	37.3
	lbf-ft	2.5	4.5	8.0	19.5	40.5	76.0	121.5	187.0	270.0
 IE31J1030007-01										
Flanged fastener of strength class equivalent to 8.8 (bolt) or 8 (nut)	N·m	3.2	6.5	12	29	59	113	175	270	395
	kgf-m	0.32	0.65	1.2	2.9	5.9	11.3	17.5	27	39.5
	lbf-ft	2.5	5.0	9.0	21.0	43.0	82.0	126.5	195.5	286.0
 IE31J1030008-01										

Small crown shape bolt	Width across flats "b" [mm]	Thread diameter "a" [mm]	Unit		
			N·m	kgf-m	lbf-ft
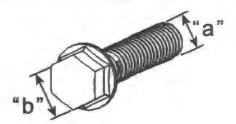 ID26J1030004-01	7	5	4.5	0.45	3.5
	8	6	10	1.0	7.5

*: Self-locking nut

Tightening Torque List

BENL06L20307004

Maintenance and Lubrication

Fastening part	Tightening torque			Note
	N·m	kgf-m	lbf-ft	
Air cleaner cover screw	2.4	0.24	1.8	☞(Page 0B-4)
Exhaust pipe bolt	23	2.3	17.0	☞(Page 0B-4)
Exhaust pipe connecting bolt	18	1.8	13.5	☞(Page 0B-4)
Muffler mounting bolt	30	3.1	22.5	☞(Page 0B-4)
Muffler connecting bolt	18	1.8	13.0	☞(Page 0B-4)
Center exhaust pipe bolt	25	2.5	18.5	☞(Page 0B-4)
Spark plug	11	1.1	8.5	☞(Page 0B-9) / ☞(Page 0B-10) / ☞(Page 0B-10) / ☞(Page 0B-11)
Oil drain plug	23	2.3	17.0	☞(Page 0B-14)
Oil filter	20	2.0	15.0	☞(Page 0B-15)
Rear axle nut	100	10.2	74.0	☞(Page 0B-20)
Chain adjuster lock-nut	22	2.2	16.5	☞(Page 0B-20)
Rear brake master cylinder rod lock-nut	18	1.8	13.5	☞(Page 0B-22)
Steering stem lock-nut	80	8.2	59.0	☞(Page 0B-27)
Steering stem top nut	90	9.2	66.5	☞(Page 0B-27)
Front fork upper clamp bolt	23	2.3	17.0	☞(Page 0B-27)
Spoke nipple (front wheel)	5	0.5	4.0	☞(Page 0B-31)
Spoke nipple (rear wheel)	4.5	0.45	3.5	☞(Page 0B-31)

Emission Control Devices

Fastening part	Tightening torque			Note
	N·m	kgf-m	lbf-ft	
PAIR reed valve cover bolt	10	1.0	7.5	☞(Page 1B-4)
EVAP canister bracket bolt	5.5	0.56	4.05	☞(Page 1B-7)
EVAP system purge control solenoid valve nut	6.7	0.68	4.95	☞(Page 1B-8)

Engine Electrical Devices

Fastening part	Tightening torque			Note
	N·m	kgf-m	lbf-ft	
IAP sensor screw	1.3	0.13	0.95	☞(Page 1C-4)
IAT sensor screw	1.3	0.13	0.95	☞(Page 1C-5)
ECT sensor	18	1.8	13.5	☞(Page 1C-6)
HO2 sensor	25	2.5	18.5	☞(Page 1C-9)

Engine Mechanical

Fastening part	Tightening torque			Note
	N·m	kgf-m	lbf-ft	
Air cleaner outlet tube clamp screw	1.5	0.15	1.10	☞(Page 1D-7)
Injector screw	3.5	0.36	2.60	☞(Page 1D-8)
Bracket bolt	10	1.0	7.5	☞(Page 1D-8)
Intake pipe clamp screw	1.5	0.15	1.10	☞(Page 1D-9)
EVAP system purge control solenoid valve nut	6.7	0.68	4.95	☞(Page 1D-9)
Intake pipe mounting screw	8.4	0.86	6.20	☞(Page 1D-10)
Cylinder head cover bolt	14	1.4	10.5	☞(Page 1D-13)
Camshaft journal holder bolt	10	1.0	7.5	☞(Page 1D-16) / ☞(Page 1D-18)
Generator cover plug	15	1.5	11.0	☞(Page 1D-20)
Valve timing inspection plug	20	2.0	15.0	☞(Page 1D-20)
EVAP canister bracket bolt	10	1.0	7.5	☞(Page 1D-20)
Engine mounting thrust adjuster	12	1.2	9.0	☞(Page 1D-26)
Engine mounting thrust adjuster lock-nut	45	4.6	33.5	☞(Page 1D-26)
Engine mounting pinch bolt	23	2.3	17.0	☞(Page 1D-29)

Fastening part	Tightening torque			Note
	N·m	kgf-m	lbf-ft	
Front footrest bracket bolt	26	2.7	19.5	☞(Page 1D-29)
Cylinder head bolt (M10)	25 → 46 N·m (2.5 → 4.7 kgf-m, 18.5 → 34.0 lbf-ft)			☞(Page 1D-39)
Cylinder head nut (M8)	25	2.5	18.5	☞(Page 1D-39)
Cylinder head nut (M6)	10	1.0	7.5	☞(Page 1D-39)
Cylinder head bolt (M6)	10	1.0	7.5	☞(Page 1D-39)
Cylinder nut	10	1.0	7.5	☞(Page 1D-39)
Cam chain tensioner mounting bolt	10	1.0	7.5	☞(Page 1D-40)
Cylinder head cover No. 2 bolt	10	1.0	7.5	☞(Page 1D-42)
Cam chain tension adjuster mounting bolt	10	1.0	7.5	☞(Page 1D-43) / ☞(Page 1D-44)
Cam chain tension adjuster cap bolt (Front)	23	2.3	17.0	☞(Page 1D-43)
Cam chain tension adjuster cap bolt (Rear)	7	0.71	5.20	☞(Page 1D-44)
Water union bolt	10	1.0	7.5	☞(Page 1D-53)
Oil gallery plug (M6)	10	1.0	7.5	☞(Page 1D-53)
Crankcase bolt (M8) (L110)	26	2.7	19.5	☞(Page 1D-67)
Crankcase bolt (M8) (L125)	26	2.7	19.5	☞(Page 1D-67)
Crankcase bolt (M8) (L90)	26	2.7	19.5	☞(Page 1D-67)
Crankcase bolt (M6) (L85)	11	1.1	8.5	☞(Page 1D-67)
Crankcase bolt (M6) (L70)	11	1.1	8.5	☞(Page 1D-67)
Crankcase bolt (M6) (L30)	11	1.1	8.5	☞(Page 1D-67)
Primary drive gear nut	160	16.3	118.0	☞(Page 1D-69)
Cam drive idle gear/sprocket No. 1 nut	71	7.2	52.5	☞(Page 1D-69)
Special tool bolt	23	2.3	17.0	☞(Page 1D-72)
Oil gallery plug (M8)	18	1.8	13.5	☞(Page 1D-74) / ☞(Page 1D-76)
Oil drain plug	23	2.3	17.0	☞(Page 1D-74)
Cam drive idle gear shaft bearing retainer screw	8.4	0.86	6.20	☞(Page 1D-76)
Oil gallery plug (M16)	35	3.6	26.0	☞(Page 1D-76)
Conrod cap bolt	34 N·m (3.5 kgf-m, 25.0 lbf-ft) → turn clockwise 90°			☞(Page 1D-78) / ☞(Page 1D-79)

Engine Lubrication System

Fastening part	Tightening torque			Note
	N·m	kgf-m	lbf-ft	
Oil gallery plug (M8)	18	1.8	13.5	☞(Page 1E-4) / ☞(Page 1E-9)
Oil cooler union bolt	70	7.1	52.0	☞(Page 1E-6)
Oil pressure switch	13	1.3	9.5	☞(Page 1E-6)
Oil pressure switch lead wire bolt	1.5	0.15	1.10	☞(Page 1E-6)
Piston cooling nozzle bolt	10	1.0	7.5	☞(Page 1E-9)

Engine Cooling System

Fastening part	Tightening torque			Note
	N·m	kgf-m	lbf-ft	
Cooling fan assembly mounting bolt	8.4	0.86	6.20	☞(Page 1F-9)
Radiator mounting bolt	10	1.0	7.5	☞(Page 1F-9)
Reservoir tank mounting bolt	6	0.61	4.45	☞(Page 1F-11)
Fuel tank bracket bolt	11	1.1	8.5	☞(Page 1F-11)
Thermostat connector cap bolt	10	1.0	7.5	☞(Page 1F-13)
Oil separator screw	8.4	0.86	6.20	☞(Page 1F-16)
Water pump case bolt	10	1.0	7.5	☞(Page 1F-17)

Fuel System

Fastening part	Tightening torque			Note
	N·m	kgf-m	lbf-ft	
Fuel tank filler cap bolt	3.0	0.31	2.25	☞(Page 1G-7)
Fuel tank front mounting bolt	10	1.0	7.5	☞(Page 1G-8)
Fuel tank rear mounting bolt	23	2.3	17.0	☞(Page 1G-8)
Fuel pump mounting bolt	10	1.0	7.5	☞(Page 1G-11)
Fuel injector bolt	3.5	0.36	2.60	☞(Page 1G-16)

Ignition System

Fastening part	Tightening torque			Note
	N·m	kgf-m	lbf-ft	
Ignition coil bracket bolt	10	1.0	7.5	☞(Page 1H-6)
Ignition switch mounting bolt	23	2.3	17.0	☞(Page 1H-10)

Starting System

Fastening part	Tightening torque			Note
	N·m	kgf-m	lbf-ft	
Starter motor mounting bolt	10	1.0	7.5	☞(Page 1I-5)
Starter motor lead wire mounting nut	6	0.61	4.45	☞(Page 1I-5)
Starter relay terminal bolt	4.4	0.45	3.25	☞(Page 1I-7)
Starter clutch bolt	25	2.5	18.5	☞(Page 1I-11)

Charging System

Fastening part	Tightening torque			Note
	N·m	kgf-m	lbf-ft	
Generator stator bolt	10	1.0	7.5	☞(Page 1J-7)
CKP sensor bolt	6.5	0.66	4.80	☞(Page 1J-7)
Generator lead wire clamp bolt	6.5	0.66	4.80	☞(Page 1J-7)
Generator rotor bolt	180	18.4	133.0	☞(Page 1J-7)
Generator cover bolt No.1	10	1.0	7.5	☞(Page 1J-7)
Generator cover bolt No.2	10	1.0	7.5	☞(Page 1J-7)
Regulator/rectifier nut	6.5	0.66	4.80	☞(Page 1J-9)

Exhaust System

Fastening part	Tightening torque			Note
	N·m	kgf-m	lbf-ft	
Exhaust pipe bolt	23	2.3	17.0	☞(Page 1K-5)
Center exhaust pipe bolt	25	2.5	18.5	☞(Page 1K-6)
Front exhaust pipe bolt	23	2.3	17.0	☞(Page 1K-6)
Exhaust pipe connecting bolt	18	1.8	13.5	☞(Page 1K-6)
Muffler rear cover screw	10	1.0	7.5	☞(Page 1K-6)
Muffler cover bolt (if equipped)	5.5	0.56	4.05	☞(Page 1K-7)
Muffler center cover bolt	5.5	0.56	4.05	☞(Page 1K-7)
Muffler front cover bolt	5.5	0.56	4.05	☞(Page 1K-7)
Muffler support bolt	30	3.1	22.5	☞(Page 1K-7)
Muffler connecting bolt	18	1.8	13.5	☞(Page 1K-7)

Front Suspension

Fastening part	Tightening torque			Note
	N·m	kgf-m	lbf-ft	
Front fork cap bolt	23	2.3	17.0	☞(Page 2B-3)
Front fork lower clamp bolt	23	2.3	17.0	☞(Page 2B-4)
Front fork upper clamp bolt	23	2.3	17.0	☞(Page 2B-4)
Front fender mounting bolt	12	1.2	9.0	☞(Page 2B-4)
Inner rod/damper rod	70	7.0	51.0	☞(Page 2B-8)
Front fork inner rod lock-nut	15	1.5	11.0	☞(Page 2B-10)

Rear Suspension

Fastening part	Tightening torque			Note
	N·m	kgf-m	lbf-ft	
Rear shock absorber mounting nut	50	5.0	36.5	☞(Page 2C-3) / ☞(Page 2C-6)
Cushion rod mounting nut	98	9.8	65.0	☞(Page 2C-3)
Cushion lever mounting nut	98	9.8	71.0	☞(Page 2C-6)
Cushion rod mounting nut	98	9.8	71.0	☞(Page 2C-6) / ☞(Page 2C-7)
Mud guard bolt	4.5	0.45	3.5	☞(Page 2C-11)
Brake hose guide screw	5	0.5	4.0	☞(Page 2C-11)
Swingarm pivot shaft	15	1.5	11.0	☞(Page 2C-12)
Swingarm pivot nut	100	10.0	72.5	☞(Page 2C-12)
Swingarm pivot lock-nut	90	9.0	65.0	☞(Page 2C-12)
Brake hose guide screw	3.5	0.36	2.60	☞(Page 2C-12)

Wheels and Tires

Fastening part	Tightening torque			Note
	N·m	kgf-m	lbf-ft	
Front axle nut	100	10.0	72.5	☞(Page 2D-6)
Front axle pinch bolt	23	2.3	17.0	☞(Page 2D-6) / ☞(Page 2D-6)

Drive Chain / Drive Train / Drive Shaft

Fastening part	Tightening torque			Note
	N·m	kgf-m	lbf-ft	
Engine sprocket nut	115	11.7	85.0	☞(Page 3A-4)
Engine sprocket cover bolt	10	1.0	7.5	☞(Page 3A-4)
Clutch release cylinder mounting bolt	10	1.0	7.5	☞(Page 3A-4)
Rear sprocket nut	60	6.1	44.5	☞(Page 3A-4)

Brake Control System and Diagnosis

Fastening part	Tightening torque			Note
	N·m	kgf-m	lbf-ft	
Rear brake master cylinder mounting bolt	10	1.0	7.5	☞(Page 4A-11) / ☞(Page 4A-20)
Front footrest bracket bolt	26	2.7	19.5	☞(Page 4A-11)
Brake air bleeder valve	7.5	0.76	5.55	☞(Page 4A-12)
Front reservoir cap screw	1.5	0.15	1.10	☞(Page 4A-13) / ☞(Page 4A-17)
Front brake master cylinder mounting bolt	10	1.0	7.5	☞(Page 4A-15)
Brake hose union bolt	23	2.3	17.0	☞(Page 4A-15) / ☞(Page 4A-20)
Brake light switch screw	1.2	0.12	0.90	☞(Page 4A-17)
Brake lever pivot bolt	5.9	0.6	4.35	☞(Page 4A-17)
Brake lever pivot bolt lock-nut	5.9	0.6	4.35	☞(Page 4A-17)
Rear brake master cylinder rod lock-nut	17	1.7	12.5	☞(Page 4A-20)

Front Brakes

Fastening part	Tightening torque			Note
	N·m	kgf-m	lbf-ft	
Caliper mounting bolt	39	4.0	29.0	☞(Page 4B-3) / ☞(Page 4B-3)
Pad mounting pin	15	1.5	11.0	☞(Page 4B-3) / ☞(Page 4B-3)
Brake hose union bolt	23	2.3	17.0	☞(Page 4B-3)
Brake disc bolt	23	2.3	17.0	☞(Page 4B-6)

Rear Brakes

Fastening part	Tightening torque			Note
	N·m	kgf-m	lbf-ft	
Caliper mounting bolt	17	1.7	12.5	☞(Page 4C-2)
Pad mounting pin	15	1.5	11.0	☞(Page 4C-2)
Brake hose union bolt	23	2.3	17.0	☞(Page 4C-3)
Caliper sliding pin	32	3.3	24.0	☞(Page 4C-5)
Brake disc bolt	23	2.3	17.0	☞(Page 4C-7)

ABS

Fastening part	Tightening torque			Note
	N·m	kgf-m	lbf-ft	
Brake pipe flare nut	16	1.6	11.5	☞(Page 4E-55)
Seat bridge bolt	10	1.0	7.5	☞(Page 4E-55)
IMU bolt	7	0.7	5.5	☞(Page 4E-56)
Wheel speed sensor rotor bolt	6.5	0.66	4.80	☞(Page 4E-57) / ☞(Page 4E-58)

Manual Transmission

Fastening part	Tightening torque			Note
	N·m	kgf-m	lbf-ft	
Gearshift cam bearing retainer screw	8.4	0.86	6.20	☞(Page 5B-10)
Driveshaft bearing retainer screw	8.4	0.86	6.20	☞(Page 5B-10)
Driveshaft oil seal retainer bolt	10	1.0	7.5	☞(Page 5B-10)
Countershaft bearing retainer screw	8.4	0.86	6.20	☞(Page 5B-11)
GP switch mounting bolt	6	0.61	4.45	☞(Page 5B-12)
GP switch lead wire clamp bolt	6.5	0.66	4.80	☞(Page 5B-12)
Gearshift link rod lock-nut	10	1.0	7.5	☞(Page 5B-13)
Gearshift arm stopper	19	1.9	14.0	☞(Page 5B-15)
Gearshift cam stopper bolt	10	1.0	7.5	☞(Page 5B-15)
Gearshift cam plate bolt	13	1.3	9.5	☞(Page 5B-15)
Gearshift cover bolt	11	1.1	8.5	☞(Page 5B-16)

Clutch

Fastening part	Tightening torque			Note
	N·m	kgf-m	lbf-ft	
Clutch air bleeder valve	5.4	0.55	4.00	☞(Page 5C-6)
Reservoir cap screw	1.5	0.15	1.10	☞(Page 5C-6)
Clutch master cylinder mounting bolt	10	1.0	7.5	☞(Page 5C-8)
Clutch hose union bolt	23	2.3	17.0	☞(Page 5C-9) / ☞(Page 5C-12)
Clutch lever position switch bolt	1.2	0.12	0.90	☞(Page 5C-10)
Clutch lever pivot bolt	5.9	0.60	4.35	☞(Page 5C-11)
Clutch lever pivot bolt lock-nut	5.9	0.60	4.35	☞(Page 5C-11)
Clutch release cylinder mounting bolt	10	1.0	7.5	☞(Page 5C-12)
Clutch sleeve hub nut	150	15.3	111.0	☞(Page 5C-19)
Clutch spring set bolt	10	1.0	7.5	☞(Page 5C-20)
Clutch cover bolt	10	1.0	7.5	☞(Page 5C-21)
Front footrest bracket bolt	26	2.7	19.5	☞(Page 5C-21)
Primary drive gear nut	160	16.3	118.0	☞(Page 5C-24)

Steering / Handlebar

Fastening part	Tightening torque			Note
	N·m	kgf-m	lbf-ft	
Handlebar clamp bolt	23	2.3	17.0	☞(Page 6B-4)
Handlebar balancer screw	8.4	0.86	6.20	☞(Page 6B-5) / ☞(Page 6B-5)
Rear view mirror adapter	28	2.9	21.0	☞(Page 6B-5) / ☞(Page 6B-5)
Rear view mirror nut	18	1.8	13.5	☞(Page 6B-5) / ☞(Page 6B-5)
Throttle grip screw	3.0	0.31	2.25	☞(Page 6B-6)
Left handle switch screw	3.0	0.31	2.25	☞(Page 6B-7)
Steering stem top nut	90	9.2	66.5	☞(Page 6B-10) / ☞(Page 6B-13)
Front fork upper clamp bolt	23	2.3	17.0	☞(Page 6B-10)
Handlebar holder nut	45	4.6	33.5	☞(Page 6B-11)
Steering stem nut	20 N·m (2.0 kgf-m, 15.0 lbf-ft) → turn counterclockwise 0 – 1/4			☞(Page 6B-13)
Steering stem lock-nut	80	8.2	59.0	☞(Page 6B-13)

Lighting Systems

Fastening part	Tightening torque			Note
	N·m	kgf-m	lbf-ft	
Headlight bolt	10	1.0	7.5	☞(Page 9B-4)
Headlight beam adjuster bolt	10	1.0	7.5	☞(Page 9B-4)
Headlight beam adjuster bolt	10	1.0	7.5	☞(Page 9B-5)

Combination Meter / Fuel Meter / Horn

Fastening part	Tightening torque			Note
	N·m	kgf-m	lbf-ft	
Combination meter screw	1.5	0.15	1.0	☞(Page 9C-16)

Exterior Parts

Fastening part	Tightening torque			Note
	N·m	kgf-m	lbf-ft	
Front seat bolt	5.5	0.56	4.05	☞(Page 9D-28)
Striker support bracket nut	5.5	0.56	4.05	☞(Page 9D-29)
Rear turn signal light nut	1.3	0.13	0.95	☞(Page 9D-32)
Rear turn signal light nut	5.5	0.56	4.05	☞(Page 9D-32)
Fuel tank cover bolt No.1	5.5	0.56	4.05	☞(Page 9D-33)
Fuel tank cover bolt No.2	5.5	0.56	4.05	☞(Page 9D-33)
Fuel tank side cover bracket bolt	5.5	0.56	4.05	☞(Page 9D-34)
Windscreen bolt	10	1.0	7.5	☞(Page 9D-36)
Battery holder bolt No.1	4.5	0.46	3.35	☞(Page 9D-40)
Battery holder bolt No.2	10	1.0	7.5	☞(Page 9D-40)
DC socket nut	2.8	0.29	2.10	☞(Page 9D-41)

Special Tools and Equipment

Recommended Service Material

BENL06L20308001

Material	SUZUKI recommended product or Specification		Note
Coolant	SUZUKI LONG LIFE COOLANT (GREEN)	P/No.: 99000–99032–12X	☞(Page 0C-18)
	SUZUKI SUPER LONG LIFE COOLANT (BLUE)	P/No.: 99000–99032–20X	☞(Page 0C-18)
Fork oil	SUZUKI FORK OIL L-01	P/No.: 99000–99044–L01	☞(Page 0C-19)

Fuel / Oil / Fluid / Coolant Recommendation

BENL06L20308002

Fuel

NOTICE

Do not use leaded gasoline. If it is used, the engine and the emission control system will be damaged.

Use unleaded gasoline with an octane rating of 95 RON (90 AKI) or higher.
Unleaded gasoline containing up to 5% or 10% ethanol by volume may be used. Use the recommended gasoline according to a gasoline label (if equipped).

Engine Oil

Use Suzuki genuine engine oil or equivalent. If Suzuki genuine engine oil is not available, select a proper engine oil according to the following guideline.

	Engine oil
API service classification	SG, SH, SJ, SL, SM or SN
JASO T903 standard	MA, MA2
Viscosity	SAE 10W-40

If SAE 10W-40 engine oils are not available, select oils of an appropriate viscosity grade according to the following chart.

NOTICE

When 10W-30 engine oil is used, use only SG, SH, SJ, SL API classification. If there are not used API classification engine oils, the engine will be damaged.

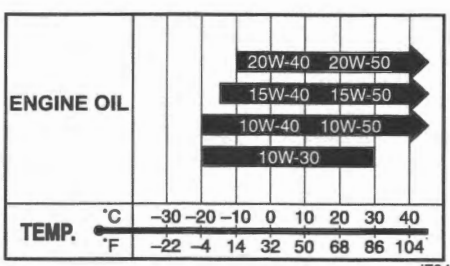

IF04K1030001-01

Suzuki does not recommend the use of engine oils which have an "ENERGY CONSERVING" or "RESOURCE CONSERVING" indication in the API service symbol for any of its motorcycles / ATVs. They can affect the engine life and the clutch performance.

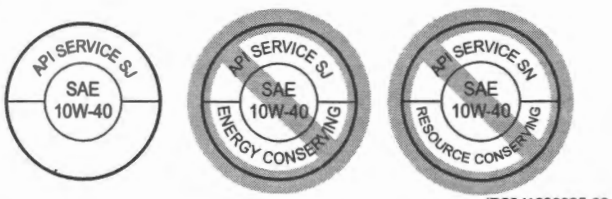

ID26J1030005-02

For U.S.A. and Canada
Suzuki recommends the use of SUZUKI PERFORMANCE 4 MOTOR OIL.

Brake Fluid

Specification and classification: DOT 4

⚠ WARNING

Since the brake system of this motorcycle is filled with a glycol-based brake fluid by the manufacturer, do not use or mix different types of fluid such as silicone-based and petroleum-based fluid for refilling the system, otherwise serious damage will result.
Do not use any brake fluid taken from old or used or unsealed containers.
Never reuse brake fluid left over from a previous servicing, which has been stored for a long period.

Engine Coolant

Suzuki recommends the use of SUZUKI LONG LIFE COOLANT or SUZUKI SUPER LONG LIFE COOLANT.

Coolant 99000–99032–12X (SUZUKI LONG LIFE COOLANT (GREEN))
Coolant 99000–99032–20X (SUZUKI SUPER LONG LIFE COOLANT (BLUE))

If SUZUKI COOLANT is not available, use an anti-freeze/engine coolant compatible with an aluminum radiator, mixed with distilled water only.

For SUZUKI LONG LIFE COOLANT

NOTICE

- **Use a high quality ethylene glycol base anti-freeze, mixed with distilled water. Do not mix an alcohol base anti-freeze and different brands of anti-freeze.**
- **Do not put in more than 60% anti-freeze or less than 50%. (Refer to Fig. 1 and 2.)**

The 50:50 mixture of distilled water and ethylene glycol anti-freeze will provide the optimum corrosion protection and excellent heat protection, and will protect the cooling system from freezing at temperatures above –31 °C (–24 °F).
If the vehicle is to be exposed to temperatures below –31 °C (–24 °F), this mixing ratio should be increased up to 55% or 60% according to the figure.

Anti-freeze Proportioning Chart

Anti-freeze density	Freezing point
50%	–31 °C (–24 °F)
55%	–40 °C (–40 °F)
60%	–55 °C (–67 °F)

Fig.1: Engine coolant density-freezing point curve

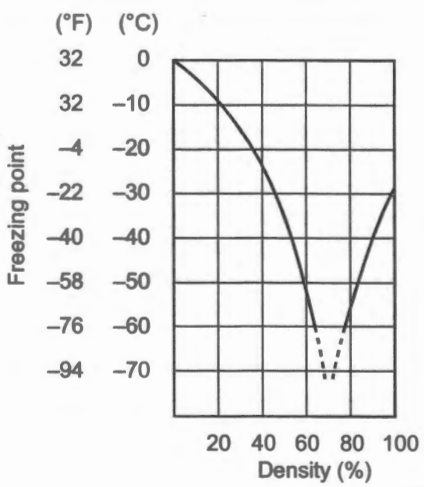

I310G1160001-02

Fig.2: Engine coolant density-boiling point curve

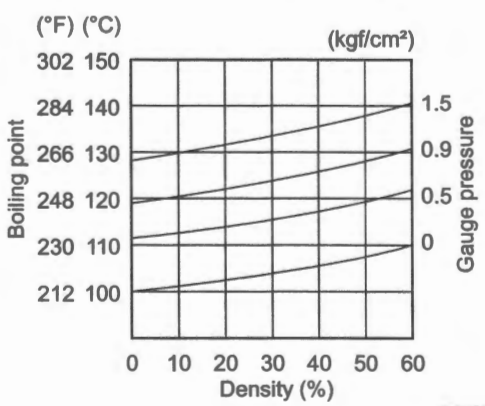

I310G1160002-02

For SUZUKI SUPER LONG LIFE COOLANT

NOTICE

- **Ethanol or methanol base coolant or water alone should not be used in cooling system at any time as damage to cooling system could occur.**
- **Do not mix the distilled water, SUZUKI LONG LIFE COOLANT (coolant color: Green) or equivalent.**

SUZUKI SUPER LONG LIFE COOLANT will provide the optimum corrosion protection and excellent heat protection, and will protect the cooling system from freezing at temperatures above –36 °C (–33 °F).

Anti-freeze concentration table

Anti-freeze density	Freezing point
50%	–36 °C (–33 °F)

Water for mixing
Use distilled water only. Water other than distilled water can corrode and clog the aluminum radiator.
For engine coolant mixture information, refer to "Engine Coolant" (Page 0C-18).

NOTICE

Mixing of anti-freeze/engine coolant should be limited to 60%. Mixing beyond it would reduce its efficiency. If the anti-freeze/engine coolant mixing ratio is below 50%, rust inhabiting performance is greatly reduced. Be sure to mix it above 50% even though the atmospheric temperature does not go down to the freezing point.

Anti-freeze / Engine coolant
The engine coolant perform as a corrosion and rust inhibitor as well as anti-freeze. Therefore, the engine coolant should be used at all times even though the atmospheric temperature in your area does not go down to freezing point.
Suzuki recommends the use of SUZUKI COOLANT anti-freeze/engine coolant. If this is not available, use an equivalent which is compatible with an aluminum radiator.

Front Fork Oil
Use SUZUKI FORK OIL L-01.

Fork oil 99000–99044–L01 (SUZUKI FORK OIL L-01)

Special Tool

BENL06L20308003

NOTE

Torx® is the registered trademark of Camcar Division of Textron inc. U.S.A.

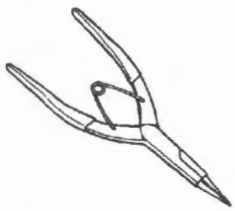 **09900–06107** Snap ring pliers (External)	 **09900–06108** Snap ring pliers (Internal)	 **09900–18740** Hexagon bit socket (24 mm: 1/2 sq.)	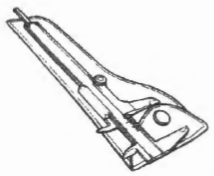 **09900–20101** Vernier calipers (150 mm)	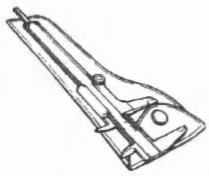 **09900–20102** Vernier calipers (200 mm)
 **09900–20202** Micrometer (25 - 50 mm)	 **09900–20204** Micrometer (75 - 100 mm)	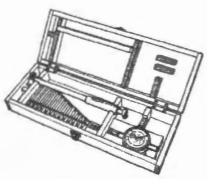 **09900–20530** Cylinder gauge set	 **09900–20602** Dial gauge (1 x 0.001 mm)	 **09900–20607** Dial gauge (10 x 0.01 mm)
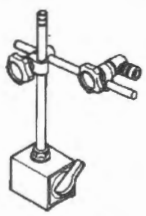 **09900–20701** Dial gauge chuck	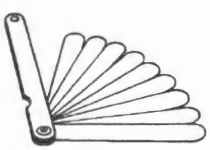 **09900–20803** Thickness gauge	 **09900–20805** Tire depth gauge	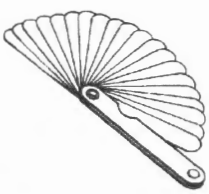 **09900–20806** Thickness gauge	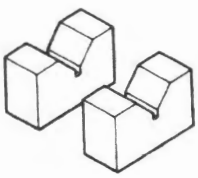 **09900–21304** V blocks
 **09900–22301** Plastigage (0.025 - 0.076 mm)	 **09900–22302** Plastigage (0.051 - 0.152 mm)	 **09900–22403** Small bore gauge (18 - 35 mm)	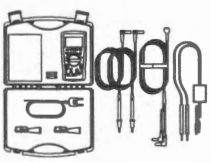 **09900–25011** Circuit tester set	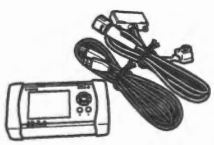 **09904–41031** SDS-II set
 **09904–41041** SDS-II (oscilloscope) set	 **09904–41051** Conversion cable	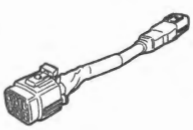 **09904–41070** Conversion cable (ISO)	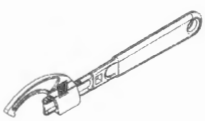 **09910–60620** Adjustable wrench	 **09912–66310** Micrometer (0 - 25 mm)

 **09913–50121** Oil seal remover	 **09913–60230** Journal bearing remover / installer	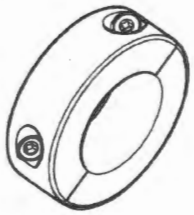 **09913–60241** Journal bearing holder	 **09913–70210** Bearing installer set	 **09915–40620** Oil filter wrench
 **09915–63311** Compression gauge adapter	 **09915–64512** Compression gauge set (2500 kPa)	 **09915–74521** Oil pressure gauge hose	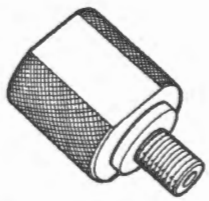 **09915–74533** Oil pressure gauge attachment	 **09915–77331** Oil pressure gauge (1000 kPa)
 **09916–10911** Valve lapper set	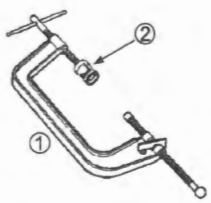 **09916–14510** Valve lifter	 **09916–14522** Valve lifter attachment	 **09916–34542** Reamer handle	 **09916–34550** Valve guide reamer (ø5.5)
 **09916–34580** Valve guide reamer (ø10.8)	 **09916–44910** Valve guide installer / remover	 **09916–53340** Valve guide installer attachment	 **09916–84511** Tweezers	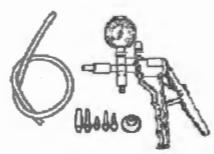 **09917–47011** Vacuum pump gauge set
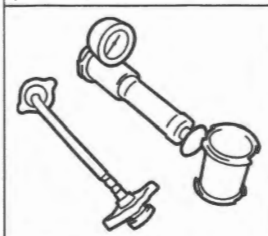 **09918–78211** Radiator cap tester kit	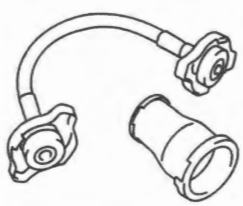 **09918–78220** Radiator cap tester adapter	 **09919–28620** Sleeve protector	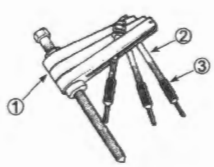 **09920–13120** Crankcase separator	 **09920–31020** Extension handle

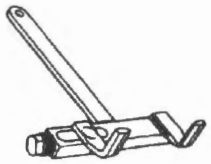 **09920–53740** Clutch sleeve hub holder	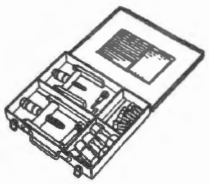 **09921–20240** Bearing remover set	 **09922–22712** Drive chain cut / rivet tool set	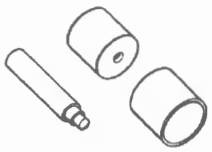 **09924–74570** Bearing installer / remover	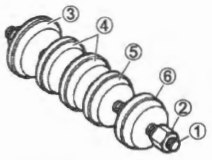 **09924–84510** Bearing installer set
 **09924–84521** Bearing installer set	 **09925–18011** Bearing installer	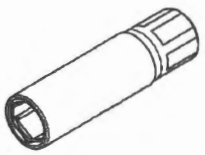 **09930–10190** Spark plug socket (14 mm : 3/8 sq.)	 **09930–11920** Torx® bit (JT40H)	 **09930–11940** Torx® bit holder (3/8 sq.)
 **09930–30450** Rotor remover bolt	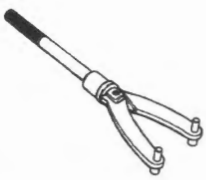 **09930–40113** Rotor holder	 **09930–44530** Rotor holder	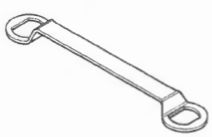 **09930–44541** Rotor holder	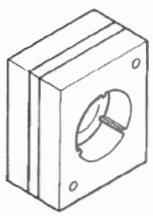 **09930–73110** Starter torque limiter holder
 **09930–73120** Starter torque limiter socket	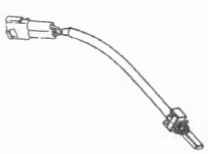 **09930–82760** Mode selection switch	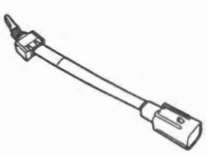 **09930–83130** Mode selection switch (ISO)	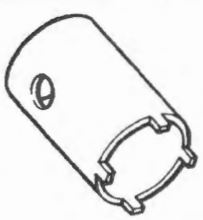 **09940–14911** Steering stem nut socket	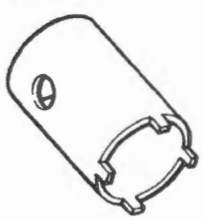 **09940–14940** Swingarm pivot adjuster wrench
 **09940–14960** Steering stem nut socket wrench	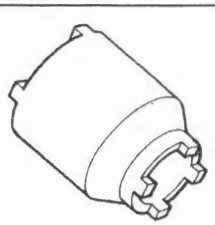 **09940–14980** Engine mounting adjuster wrench	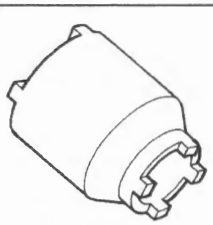 **09940–14990** Engine mounting adjuster wrench	 **09940–30221** Front fork cylinder holder	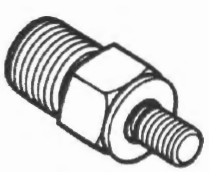 **09940–40211** Fuel pressure gauge adapter

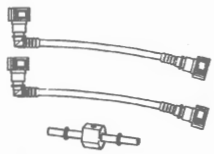 **09940–40220** Fuel pressure gauge attachment	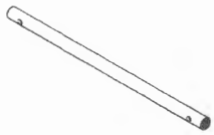 **09940–52841** Front fork inner rod holder	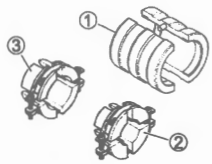 **09940–52861** Front fork oil seal installer set	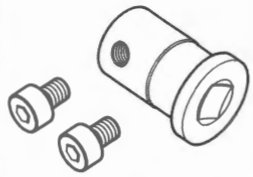 **09940–54860** Front fork cylinder holder attachment	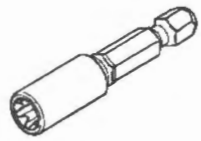 **09940–63110** Torx® bit (E8)
 **09940–93110** Fork spring compressor	 **09940–94922** Front fork spring stopper plate	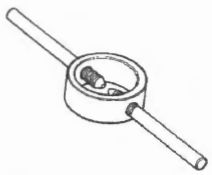 **09940–94930** Front fork spacer holder	 **09941–34513** Bearing installer set	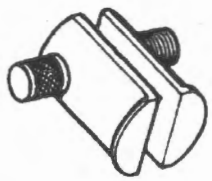 **09941–54911** Bearing outer race remover
 **09943–74111** Front fork oil level gauge	 **09943–88211** Pinion bearing installer	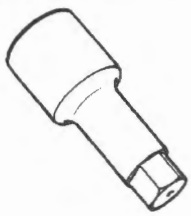 **09944–28321** Hexagon bit socket (19 mm : 1/2 sq.)		

Section 1

Engine

CONTENTS

Precautions 1-1
Precautions 1-1
Precautions for Engine 1-1

Engine General Information and Diagnosis 1A-1
Precautions 1A-1
Precautions for DTC Trouble Shooting 1A-1
General Description 1A-1
Self-Diagnosis Function 1A-1
Comparison Table of DTC Name 1A-5
Schematic and Routing Diagram 1A-6
Engine Control System Wiring Diagram 1A-6
Component Location 1A-8
Engine Control System Component Location 1A-8
Diagnostic Information and Procedures 1A-9
Engine Control System Check 1A-9
DTC Check 1A-11
DTC Clearance 1A-12
DTC Table 1A-13
Fail-Safe Table 1A-19
Scan Tool Data 1A-21
Visual Inspection 1A-24
Engine Symptom Diagnosis 1A-25
MIL Inspection 1A-30
Master Warning Indicator Light Inspection 1A-30
DTC P0030 (C44) 1A-32
DTC P0105 / P0106 / P0107 (C13) 1A-34
DTC P0110 / P0111 / P0112 (C21) 1A-37
DTC P0115 / P0116 / P0117 (C15) 1A-39
DTC P0120 / P0123 (C29) 1A-41
DTC P0130 / P0132 / P0133 (C44) 1A-44
DTC P0171 / P0172 (C45) 1A-46
DTC P0201 (C32) 1A-48
DTC P0202 (C33) 1A-50
DTC P0220 / P0223 (C29) 1A-52
DTC P0225 / P0228 (C86) 1A-55
DTC P0232 / P023F (C41) 1A-58
DTC P0300 / P0301 / P0302 (C74) 1A-61
DTC P0335 (C12) 1A-63
DTC P0351 (C24) / P0352 (C25) / P0353 (C26) / P0354 (C27) 1A-65
DTC P0410 (C61) 1A-66
DTC P0412 (C61) 1A-67
DTC P0444 (C62) 1A-69
DTC P0480 (C60) 1A-71
DTC P0500 (C16) 1A-73
DTC P050B (C84) 1A-75
DTC P0602 ..... 1A-76
DTC P0607 (C68) 1A-76
DTC P0830 (C72) 1A-77
DTC P0850 (C81) 1A-79
DTC P0915 / P0916 (C31) 1A-81
DTC P1105 / P1106 / P1107 (C17) 1A-83
DTC P1109 (C13) 1A-86
DTC P1610 (C42) 1A-87
DTC P1622 (C68) 1A-87
DTC P1650 (C71) 1A-88
DTC P1700 / P1701 (C23) 1A-89
DTC P2101 (C30) 1A-91
DTC P2102 (C30) 1A-95
DTC P210B (C86) 1A-99
DTC P210C (C86) 1A-103
DTC P210E (C86) 1A-107
DTC P2120 / P2123 (C14) 1A-109
DTC P2125 / P2128 (C14) 1A-111
DTC P2130 / P2133 (C86) 1A-113
DTC P2135 (C29) 1A-115
DTC P2138 (C14) 1A-117
DTC P2158 (C91) 1A-119
DTC P2505 (C00) 1A-121
DTC P2A00 (C44) 1A-123
DTC U0073 (C83) 1A-125
DTC U0121 (C83) 1A-125
DTC U0123 (C83) 1A-125
DTC U0155 (C83) 1A-125
Engine Control System Circuits Inspection 1A-125
ECM Power Supply and Ground Circuit Check 1A-133
Special Tools and Equipment 1A-136
Special Tool 1A-136

Emission Control Devices 1B-1
Precautions 1B-1
Precautions for Emission Control Devices 1B-1
Schematic and Routing Diagram 1B-1
PAIR System Hose Routing Diagram 1B-1
PCV Hose Routing Diagram 1B-2
EVAP Canister Hose Routing Diagram 1B-2

Repair Instructions 1B-3
PAIR Reed Valve Removal and Installation 1B-3
PAIR Control Solenoid Valve Removal and Installation 1B-5
PAIR System Inspection 1B-5
PAIR Hose Removal and Installation 1B-5
PCV Hose Inspection 1B-5
PCV Hose Removal and Installation 1B-6
EVAP System Removal and Installation 1B-6
EVAP System Inspection 1B-8
Specifications 1B-8
Tightening Torque Specifications 1B-8

Engine Electrical Devices 1C-1

Precautions 1C-1
Precautions for Engine Electrical Device 1C-1
Precautions for Electric Throttle Control System 1C-1
Component Location 1C-1
Engine Electrical Components Location 1C-1
Diagnostic Information and Procedures 1C-1
Engine Symptom Diagnosis 1C-1
Repair Instructions 1C-2
ECM Removal and Installation 1C-2
ECM Learned Value Reset 1C-3
IAP Sensor Inspection 1C-3
IAP Sensor Removal and Installation 1C-4
IAT Sensor Inspection 1C-5
IAT Sensor Removal and Installation 1C-5
ECT Sensor Inspection 1C-6
ECT Sensor Removal and Installation 1C-6
TP Sensor Inspection 1C-7
HO2 Sensor Inspection 1C-7
HO2 Sensor Removal and Installation 1C-8
CKP Sensor Inspection 1C-9
CKP Sensor Removal and Installation 1C-10
TO Sensor Inspection 1C-10
TO Sensor Removal and Installation 1C-11
Accelerator Position Sensor Inspection 1C-11
Accelerator Position Sensor Removal and Installation 1C-12
Throttle Valve Motor Inspection 1C-12
Throttle Valve Motor Relay Inspection 1C-13
Throttle Valve Motor Relay Removal and Installation 1C-13
GP Switch Inspection 1C-13
GP Switch Removal and Installation 1C-13
Specifications 1C-14
Tightening Torque Specifications 1C-14
Special Tools and Equipment 1C-14
Special Tool 1C-14

Engine Mechanical 1D-1

Precautions 1D-1
Precautions for Engine Mechanical 1D-1
Diagnostic Information and Procedures 1D-2
Compression Pressure Check 1D-2
Repair Instructions 1D-3
Intake System Components 1D-3
Air Cleaner Element Removal and Installation 1D-6
Air Cleaner Element Inspection 1D-6
Air Cleaner Box Removal and Installation 1D-6
Throttle Body Components 1D-7
Throttle Body Removal and Installation 1D-7
Throttle Body Inspection and Cleaning 1D-9
Intake Pipe Removal and Installation 1D-10
Cylinder Head Cover/Camshaft Components 1D-11
Cylinder Head Cover Removal and Installation 1D-12
Camshaft Removal 1D-13
Camshaft Installation 1D-15
Camshaft Inspection 1D-20
Valve Clearance Inspection and Adjustment 1D-22
Engine Assembly Removal 1D-22
Engine Assembly Installation 1D-25
Cam Chain Tension Adjuster / Cam Chain Tensioner / Cylinder Head Assembly / Cam Chain Guide / Cylinder Components 1D-30
Cam Chain Tension Adjuster / Cam Chain Tensioner / Cylinder Head Assembly / Cam Chain Guide / Cylinder Removal 1D-32
Cam Chain Tension Adjuster / Cam Chain Tensioner / Cylinder Head Assembly / Cam Chain Guide / Cylinder Installation 1D-36
Cam Chain Tension Adjuster Inspection 1D-46
Cam Drive Idle Gear / Sprocket No. 2 Bushing Inspection 1D-46
Valve/Valve Spring Components 1D-47
Valve / Valve Spring Removal and Installation 1D-48
Valve Inspection 1D-50
Valve Seat Repair 1D-52
Valve Spring Inspection 1D-52
Cylinder Head Disassembly and Reassembly 1D-53
Cylinder Head Inspection 1D-54
Valve Guide Replacement 1D-54
Cylinder Inspection 1D-56
Piston Components 1D-57
Piston Removal and Installation 1D-58
Piston Ring Removal and Installation 1D-58
Piston and Piston Ring Inspection 1D-60
Cam Chain Guide Inspection 1D-62
Cam Chain Tensioner Inspection 1D-62
Crankcase Assembly Disassembly 1D-62
Crankcase Assembly Reassembly 1D-66
Crankshaft Assembly Removal and Installation 1D-70
Crankshaft Journal Bearing Removal and Installation 1D-71
Left Crankcase Disassembly and Reassembly 1D-73
Right Crankcase Disassembly and Reassembly 1D-74
Crankcase Bearing / Oil Seal Inspection 1D-76
Conrod Removal and Installation 1D-77
Conrod / Crankshaft Inspection 1D-78
Conrod Crank Pin Bearing Inspection and Selection 1D-79
Crankshaft Journal Bearing Inspection and Selection 1D-81

Specifications **1D-83**
Tightening Torque Specifications 1D-83
Special Tools and Equipment **1D-84**
Recommended Service Material 1D-84
Special Tool 1D-84

Engine Lubrication System 1E-1

Precautions **1E-1**
Precautions for Engine Oil 1E-1
Schematic and Routing Diagram **1E-2**
Engine Lubrication System Chart Diagram 1E-2
Diagnostic Information and Procedures **1E-3**
Engine Lubrication Symptom Diagnosis 1E-3
Oil Pressure Check 1E-3
Repair Instructions **1E-4**
Engine Oil Inspection 1E-4
Engine Oil Replacement 1E-4
Oil Filter Replacement 1E-4
Oil Strainer / Oil Pressure Regulator Removal and Installation 1E-4
Oil Strainer Inspection and Cleaning 1E-5
Oil Pressure Regulator Inspection 1E-5
Oil Cooler / Oil Cooler Hose Inspection 1E-5
Oil Cooler Removal and Installation 1E-5
Oil Pressure Switch Removal and Installation 1E-6
Oil Pressure Switch Inspection 1E-7
Oil Jet / Piston Cooling Nozzle Removal and Installation 1E-7
Oil Jet / Piston Cooling Nozzle Inspection 1E-9
Oil Pump Removal and Installation 1E-10
Oil Pump Inspection 1E-10
Specifications **1E-11**
Tightening Torque Specifications 1E-11
Special Tools and Equipment **1E-11**
Recommended Service Material 1E-11
Special Tool 1E-11

Engine Cooling System 1F-1

Precautions **1F-1**
Precautions for Engine Cooling System 1F-1
Precautions for Engine Coolant 1F-1
General Description **1F-1**
Engine Coolant Description 1F-1
Schematic and Routing Diagram **1F-2**
Cooling Circuit Diagram 1F-2
Water Hose Routing Diagram 1F-3
Diagnostic Information and Procedures **1F-6**
Engine Cooling Symptom Diagnosis 1F-6
Repair Instructions **1F-7**
Engine Coolant Level Inspection 1F-7
Engine Coolant Replacement 1F-7
Engine Cooling System Inspection 1F-7
Radiator Cap Inspection 1F-7
Cooling Fan On-Vehicle Inspection 1F-8
Radiator Hose Inspection 1F-8
Radiator / Cooling Fan Motor Removal and Installation 1F-8
Radiator Inspection and Cleaning 1F-9
Radiator Reservoir Tank Inspection 1F-10
Radiator Reservoir Tank Removal and Installation 1F-10
Water Hose Inspection 1F-11
Water Hose Removal and Installation 1F-11
Cooling Fan Relay Inspection 1F-12
Cooling Fan Relay Removal and Installation 1F-12
Thermostat Removal and Installation 1F-12
Thermostat Inspection 1F-13
Water Pump Assembly Components 1F-14
Water Pump Disassembly and Reassembly 1F-15
Water Pump Related Parts Inspection 1F-18
Specifications **1F-19**
Tightening Torque Specifications 1F-19
Special Tools and Equipment **1F-19**
Recommended Service Material 1F-19
Special Tool 1F-19

Fuel System 1G-1

Precautions **1G-1**
Precautions for Fuel System 1G-1
Diagnostic Information and Procedures **1G-2**
Fuel System Symptom Diagnosis 1G-2
Repair Instructions **1G-2**
Fuel Tank Water Drain Hose and Breather Hose Routing Diagram 1G-2
Fuel Pressure Relief Procedure 1G-3
Fuel Feed Hose Disconnection and Reconnection 1G-3
Fuel Pressure Inspection 1G-3
Fuel Discharge Amount Inspection 1G-4
Fuel Feed Hose Removal and Installation 1G-5
Fuel Hose Inspection 1G-5
Fuel Tank Components 1G-5
Fuel Tank Molding Construction 1G-6
Fuel Tank Cap Removal and Installation 1G-7
Fuel Tank Removal and Installation 1G-7
Fuel Pump Components 1G-9
Fuel Pump On-Vehicle Inspection 1G-10
Fuel Pump Assembly Removal and Installation 1G-10
Fuel Pump Disassembly and Reassembly 1G-12
Fuel Filter Inspection 1G-15
Fuel Level Gauge Inspection 1G-15
Fuel Pump Relay Inspection 1G-15
Fuel Pump Relay Removal and Installation 1G-16
Fuel Injector On-Vehicle Inspection 1G-16
Fuel Injector Removal and Installation 1G-16
Fuel Injector Inspection and Cleaning 1G-17
Specifications **1G-17**
Tightening Torque Specifications 1G-17
Special Tools and Equipment **1G-17**
Recommended Service Material 1G-17
Special Tool 1G-17

Ignition System 1H-1

Schematic and Routing Diagram **1H-1**
Ignition System Diagram 1H-1
Ignition System Components Location 1H-1
Diagnostic Information and Procedures **1H-2**

Ignition System Symptom Diagnosis..... 1H-2
No Spark or Poor Spark..... 1H-3
Repair Instructions 1H-4
Ignition Coil Construction..... 1H-4
Spark Plug Removal and Installation..... 1H-6
Ignition Coil Removal and Installation..... 1H-6
Ignition Coil Inspection..... 1H-6
Engine Stop / Starter Switch Inspection..... 1H-8
Ignition Switch Inspection..... 1H-8
Ignition Switch Removal and Installation..... 1H-9
Specifications 1H-11
Tightening Torque Specifications..... 1H-11
Special Tools and Equipment 1H-11
Special Tool..... 1H-11

Starting System 1I-1

Schematic and Routing Diagram 1I-1
Starting System Diagram..... 1I-1
Component Location 1I-1
Starting System Components Location..... 1I-1
Diagnostic Information and Procedures 1I-2
Starting System Symptom Diagnosis..... 1I-2
Starter Motor Will Not Run..... 1I-2
Starter Motor Runs But Does Not Crank the Engine..... 1I-3
Repair Instructions 1I-4
Starter Motor Components..... 1I-4
Starter Motor Assembly Removal and Installation..... 1I-5
Starter Motor Disassembly and Reassembly..... 1I-5
Starter Motor Inspection..... 1I-6
Starter Relay Removal and Installation..... 1I-7
Starter Relay Inspection..... 1I-7
Starter Sub Relay Inspection..... 1I-8
Starter Sub Relay Removal and Installation..... 1I-8
Starter Interlock System Parts Inspection..... 1I-8
Starter Torque Limiter / Starter Clutch Removal and Installation..... 1I-9
Starter Torque Limiter Inspection..... 1I-12
Starter Clutch Inspection..... 1I-13
Engine Stop / Starter Switch Inspection..... 1I-13
Specifications 1I-14
Tightening Torque Specifications..... 1I-14
Special Tools and Equipment 1I-14
Recommended Service Material..... 1I-14
Special Tool..... 1I-14

Charging System 1J-1

Schematic and Routing Diagram 1J-1
Charging System Diagram..... 1J-1
Component Location 1J-1
Charging System Components Location..... 1J-1
Diagnostic Information and Procedures 1J-2
Charging System Symptom Diagnosis..... 1J-2
Battery Runs Down Quickly..... 1J-3
Repair Instructions 1J-4
Battery Current Leakage Inspection..... 1J-4
Regulated Voltage Inspection..... 1J-4
Generator Inspection..... 1J-4
Generator Removal..... 1J-5
Generator Installation..... 1J-7
Regulator / Rectifier Construction..... 1J-8
Regulator / Rectifier Removal and Installation..... 1J-8
Battery Charging..... 1J-9
Battery Removal and Installation..... 1J-10
Battery Visual Inspection..... 1J-10
Specifications 1J-11
Tightening Torque Specifications..... 1J-11
Special Tools and Equipment 1J-11
Recommended Service Material..... 1J-11
Special Tool..... 1J-11

Exhaust System 1K-1

Precautions 1K-1
Precautions for Exhaust System..... 1K-1
Repair Instructions 1K-2
Exhaust System Components..... 1K-2
Exhaust Pipe / Muffler Removal..... 1K-3
Exhaust Pipe / Muffler Installation..... 1K-5
Exhaust System Inspection..... 1K-7
Specifications 1K-8
Tightening Torque Specifications..... 1K-8

Precautions

Precautions

Precautions for Engine

BENL06L21000001

Refer to "General Precautions" in Section 00 (Page 00-1), "Precautions for Catalytic Converter" in Section 00 (Page 00-1), "Precautions for Electrical Circuit Service" in Section 00 (Page 00-2), "Precautions for Circuit Tester" in Section 00 (Page 00-8) and "Precautions for SDS-II" in Section 00 (Page 00-8).

Engine General Information and Diagnosis

Precautions

Precautions for DTC Trouble Shooting

BENL06L21100001

Refer to "General Precautions" in Section 00 (Page 00-1), "Precautions for Electrical Circuit Service" in Section 00 (Page 00-2), "Precautions for Circuit Tester" in Section 00 (Page 00-8) and "Precautions for SDS-II" in Section 00 (Page 00-8).

NOTE

After repairing the trouble, clear the DTC using the special tool. ☞(Page 1A-12)

General Description

Self-Diagnosis Function

BENL06L21101001

The self-diagnosis function is incorporated in the ECM. The function has two modes, "User mode" and "Dealer mode".

User Mode

- The ECM warns riders to turn the MIL (1) on or blink it depending on the failure place or its content. And the ECM turns the MIL off when detecting 3 D/C-correct continuously after detecting the first abnormality.
- For some malfunctions, ECM adopts the 3 driving cycle detection logic to prevent erroneous detection. With this logic, MIL is turned on when the same malfunction is detected for 3 consecutive driving cycles.

NOTE

- **The MIL blinking only when detecting a misfire which can cause damage to the catalyst.**
- **When some DTCs are detected, the ECM turns the master warning indicator light (2) on. And the ECM turns the master warning indicator light off when detecting 1 D/C-correct after detecting the first abnormality.**
- **The combination meter controls the each indicator based on the CAN communication signal received from ECM.**
- **When lowering of the battery is detected, the battery voltage warning indicator (3) and engine coolant temperature / oil pressure / battery voltage warning indicator light (4) are ON.**
- **For LCD indication (5), referring to "Combination Meter System Description": Technical Features in Section 0A (Page 0A-29).**

Malfunction part	MIL (1)	Master warning indicator light (2)
Other than following malfunction parts	ON or blink	—
FP relay	—	ON
Cooling fan relay	—	ON
Ignition switch (without Immobilizer control system)	—	ON
Key is not registered. (with Immobilizer control system)	—	ON
TO sensor	—	ON
IMU	—	ON
ECM ROM error or power supply failure	—	ON
CAN communication system	—	ON

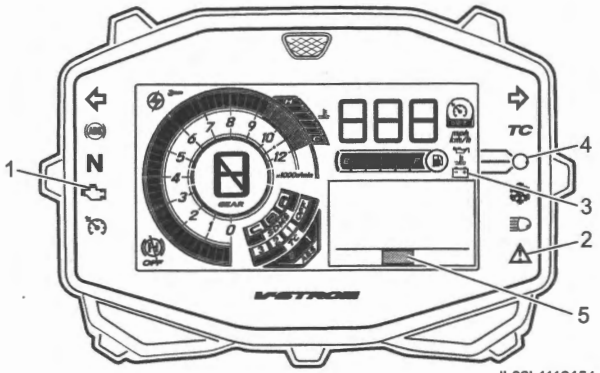

IL06L1110154-01

Supplementation

- When engine control system is normal condition, combination meter turns the MIL and master warning indicator light on about 3 seconds after turning the ignition switch ON.

NOTE

If master warning indicator light is on continuously after turning the ignition switch ON, a malfunction may be detected by other systems.

- The driving cycle (D/C) means the cycle beginning from turning the ignition switch ON through starting the engine until turning the ignition switch OFF. The 3 driving cycles are the term repeating 3 times of the above mentioned cycle.
- The ECM erases the registered failure data when not detecting the same one during 40 times of warm up cycle. And the warm up cycle means the cycle of engine warm up operation that the engine temperature reaches more than approximately 70 °C (158 °F) and also rises more than approximately 20 °C (68 °F) from the one at engine starting.
- **3 driving cycle detection logic:**
  The malfunction detected in the first driving cycle is stored in ECM memory (in the form of pending DTC) but MIL or master warning indicator light does not light at this time. ECM causes the MIL or master warning indicator light to light up when it detects second third time the same malfunction in the next two driving cycle.
- **Pending DTC:**
  "Pending DTC" is relevant to those DTCs to which the 3 driving cycle detection logic is applied. If such a DTC is detected and stored temporarily during the first of three consecutive driving cycles, the DTC is called pending DTC.

Dealer Mode

To check the function of the individual engine control system devices, the dealer mode is provided. In this check, the special tool is necessary to read the code of the malfunction items.

- The defective function is memorized in the ECM. Use the special tool's coupler to connect to the mode select coupler (6P).

  Special tool
  09930–83130

- The memorized malfunction code (1) is indicated by the display of the LCD.

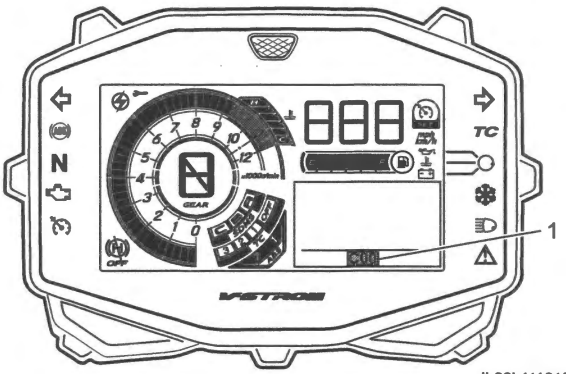

IL06L1110155-02

- Malfunction means that the ECM does not receive normal signal from the devices. These affected devices are indicated in the code form.

NOTE

- **Before checking the malfunction code, do not disconnect the ECM coupler. If the coupler from the ECM is disconnected, the malfunction code memory is erased and the malfunction code can not be checked.**
- **When C code is "C00" and if the master warning indicator light is on, check the DTC P2505 is detected by using the SDS-II. If it is not detected, a malfunction may be detected by other systems.**
- **Some DTCs do not have the corresponding C codes.**
- **Pending DTC can be checked only by using the SDS-II.**

Diagnostic coupler location
Mode select coupler (6P) (1) is located under the rear seat. This coupler can use SDS-II tool and OBD conversion cable.

Special tool
09904–41051
09904–41070

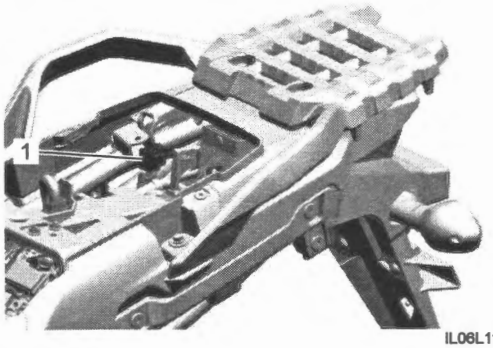

IL06L1110159-01

Show Failure Data
ECM stores the engine and driving conditions (in the form of data as shown in the figure) at the moment of the detection of a malfunction in its memory. This data is called "Show failure data".
Therefore, it is possible to know engine and driving conditions (e.g., whether the engine was warm or not, where the motorcycle was running or stopped) when a malfunction was detected by checking the "Show failure data". This "Show failure data" function can record the maximum of two Diagnostic Trouble Codes in the ECM.
Also, ECM has a function to store each "Show failure data" for two different malfunctions in the order of occurrence as the malfunction is detected. Utilizing this function, it is possible to know the order of malfunctions that have been detected. Its use is helpful when rechecking or diagnosing a trouble.
For details of "Show failure data" that can be read from ECM, refer to the table below.

DTC
Calculated LOAD value
Engine coolant temperature
Short term fuel trim (Bank1)
Long term fuel trim (Bank1)
Manifold absolute pressure "A"
Engine speed
Vehicle speed sensor front
Intake air temperature
Absolute throttle position angle bank1
Battery voltage
Gear position
Manifold absolute pressure "B"

Show failure data clearance
When a DTC is cleared, the "Show failure data" for the malfunction represented by this DTC is also cleared.

System Readiness Test (If Equipped)
The system readiness test is performed for the purpose of checking that each of the exhaust-emission-related systems fulfills the conditions that allow ECM to detect a malfunction if it occurs and to set the corresponding DTC. The test is carried out by monitoring the specific items (components) using a SDS-II. When the test shows that the conditions pre-established for the tested system are met, ECM performs an on-board diagnosis of the system, changes the status of the system readiness test from "Not Complete" to "Completed", and causes the "Completed" status to be displayed on the scan tool.
The "Completed" status is maintained until DTC clearance operation is performed using the scan tool.

NOTE

- **The system readiness test status may change from "Completed" to "Not Complete" if any of the following service operations is performed.**
  - **Disconnection of battery (–) lead wire**
  - **Disconnection of ECM couplers**
  - **Removal of ECM power supply fuse**
- **The items (components) indicated in the table below are monitored in the system readiness test to check the readiness for detecting the DTCs listed beside each monitoring item.**
- **The "Completed" or "Not Complete" status identified through the system readiness test does NOT mean the "Normal" or "Abnormal" result of on-board diagnosis.**

Monitoring item of system readiness test

Monitoring item	DTC related to monitoring item
HO2 Sensor	P0133

Comparison Table of DTC Name

BENL06L21101002

Refer to "Engine Control System Component Location" (Page 1A-8).
The comparison with the terms used in DTC name and this service manual are shown in the table below.

Terms in DTC	Term in the service manual
HO2 Sensor Heater Bank 1 Sensor 1	HO2 Sensor Heater
IAP Sensor	IAP Sensor #1
IAT Sensor 1	IAT Sensor
TP Sensor / Switch "A"	TP sensor #1 (main)
O2 Sensor Bank 1 Sensor 1	HO2 Sensor
Injector Cylinder 1	Fuel Injector #1
Injector Cylinder 2	Fuel Injector #2
TP Sensor / Switch "B"	TP sensor #1 (sub)
TP Sensor / Switch "C"	TP sensor #2 (main)
Cylinder 1	Cylinder #1
Cylinder 2	Cylinder #2
CKP Sensor "A"	CKP Sensor
Ignition Coil "A"	Ignition Coil #11
Ignition Coil "B"	Ignition Coil #21
Ignition Coil "C"	Ignition Coil #12
Ignition Coil "D"	Ignition Coil #22
PAIR System Switching Valve "A"	PAIR control solenoid valve
EVAP System Purge Control Valve	EVAP System Purge Control Solenoid Valve
Fan 1	Cooling Fan
Vehicle Speed Sensor "A"	Front Wheel Speed Sensor
Control Module	ECM
Clutch Switch "A"	Clutch lever position switch
Park / Neutral Switch	Neutral switch
IAP Sensor Bank 2	IAP Sensor #2
Throttle Actuator "A" Control Motor	Throttle valve motor #1
Throttle Actuator "B" Control Motor	Throttle valve motor #2
TP Sensor / Switch "D"	Accelerator position sensor (main)
TP Sensor / Switch "E"	Accelerator position sensor (sub)
TP Sensor / Switch "F"	TP sensor #2 (sub)
Vehicle Speed Sensor "B"	Rear Wheel Speed Sensor
ABS Control Module	ABS control unit/HU
Instrument Panel Cluster (IPC) Control Module	Combination meter

Schematic and Routing Diagram

Engine Control System Wiring Diagram

BENL06L21102001

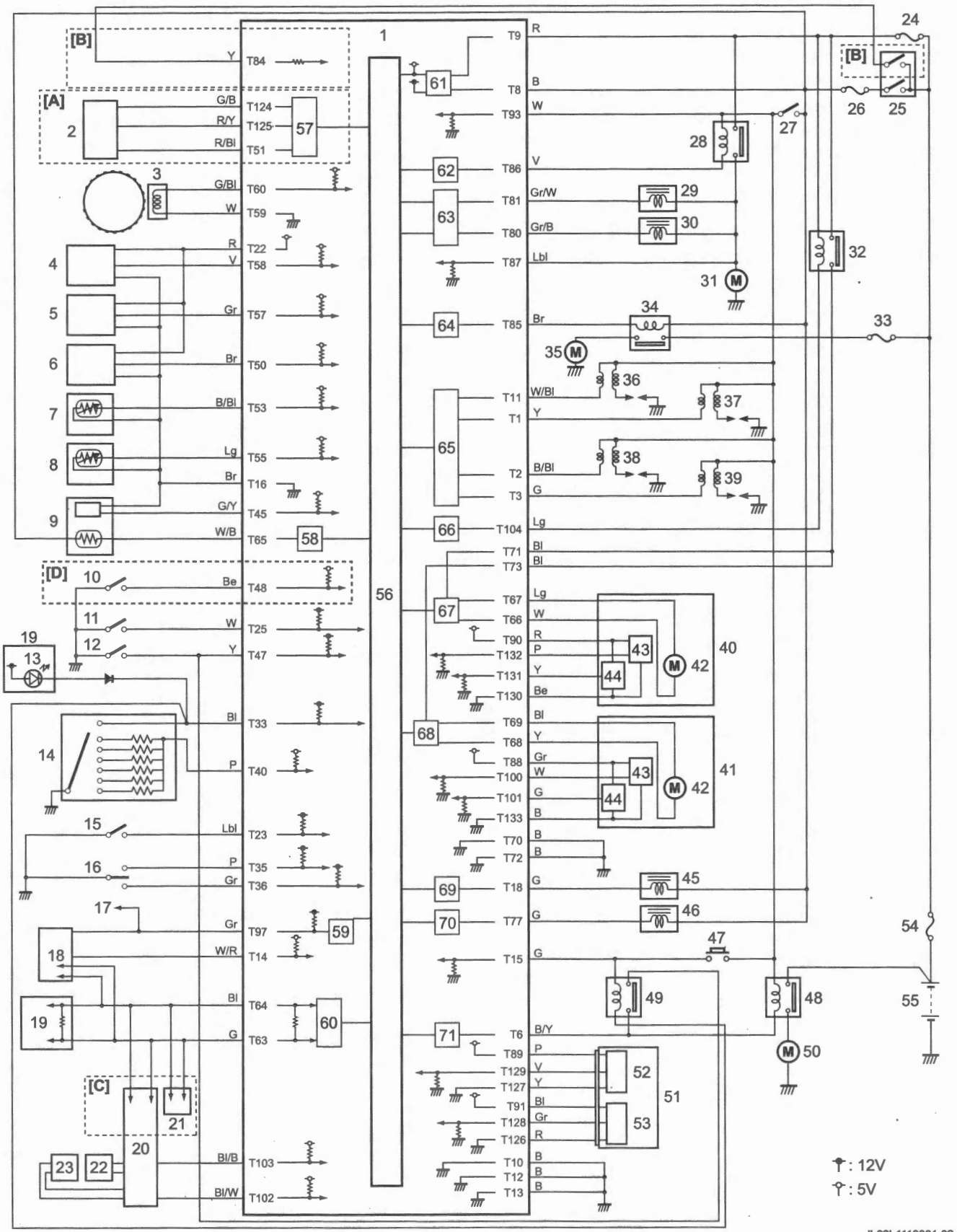

IL06L1110001-02

[A]: With immobilizer control system	16. Select switch	35. Cooling fan motor	54. Main fuse (30 A)
[B]: Without immobilizer control system	17. To ABS control unit/HU	36. Ignition coil #11	55. Battery
[C]: With motion track brake system	18. Mode select coupler (6P)	37. Ignition coil #12	56. CPU
[D]: With cruise control system	19. Combination meter	38. Ignition coil #21	57. Immobilizer antenna communication and indicator light drive circuit
1. ECM	20. ABS control unit/HU	39. Ignition coil #22	58. HO2 sensor heater drive circuit
2. Immobilizer antenna	21. IMU	40. Throttle body #1	59. Input / output circuit for communication to SDS-II
3. CKP sensor	22. Front wheel speed sensor	41. Throttle body #2	60. CAN driver
4. IAP sensor #1	23. Rear wheel speed sensor	42. Throttle valve motor	61. Power supply circuit
5. IAP sensor #2	24. Fuel fuse (10 A)	43. TP sensor (main)	62. Fuel pump relay drive circuit
6. TO sensor	25. Ignition switch	44. TP sensor (sub)	63. Fuel injector drive circuit
7. ECT sensor	26. Ignition fuse (10 A)	45. EVAP system purge control solenoid valve	64. Cooling fan relay drive circuit
8. IAT sensor	27. Engine stop / starter switch ("RUN / STOP" position)	46. PAIR control solenoid valve	65. Ignition coil drive circuit
9. HO2 sensor	28. FP relay	47. Engine stop / starter switch ("START" position)	66. Throttle valve motor relay drive circuit
10. Cruise control switch	29. Fuel injector #1	48. Starter relay	67. Throttle valve motor #1 drive circuit
11. Side-stand switch	30. Fuel injector #2	49. Starter sub relay	68. Throttle valve motor #2 drive circuit
12. Clutch lever position switch	31. Fuel pump	50. Starter motor	69. EVAP system purge control solenoid valve drive circuit
13. Neutral indicator light	32. Throttle valve motor relay	51. Throttle grip assembly	70. PAIR control solenoid valve drive circuit
14. GP switch	33. Cooling fan fuse (15 A)	52. Accelerator position sensor (main)	71. Starter relay drive circuit
15. Mode switch	34. Cooling fan relay	53. Accelerator position sensor (sub)	

Terminal Arrangement of ECM Coupler "T"

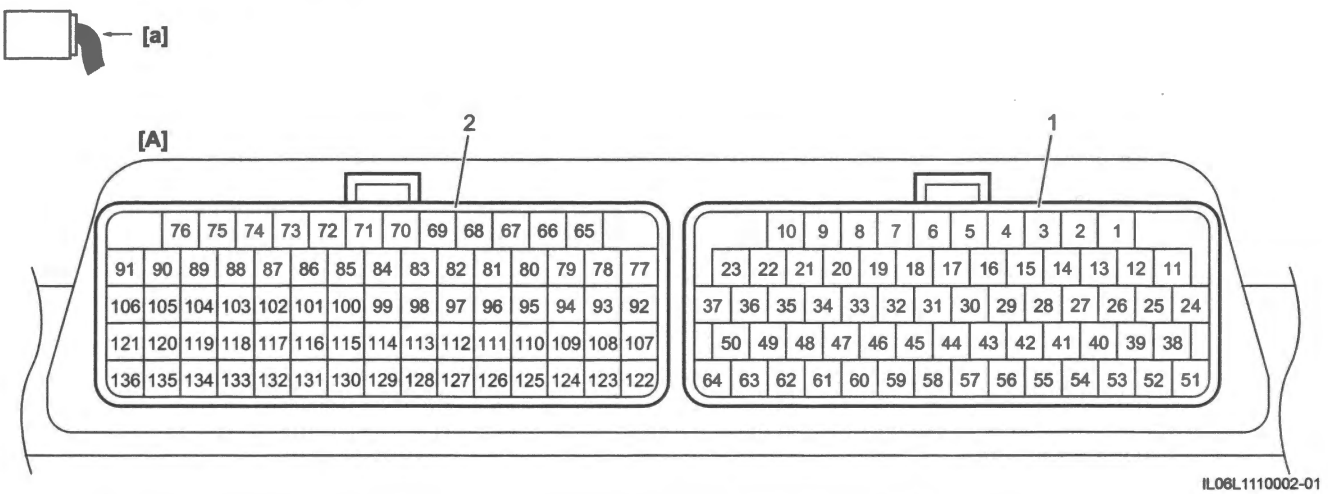

[A]: ECM coupler "T" (View [a])	1. Coupler "A"	2. Coupler "B"

Component Location

Engine Control System Component Location

BENL06L21103001

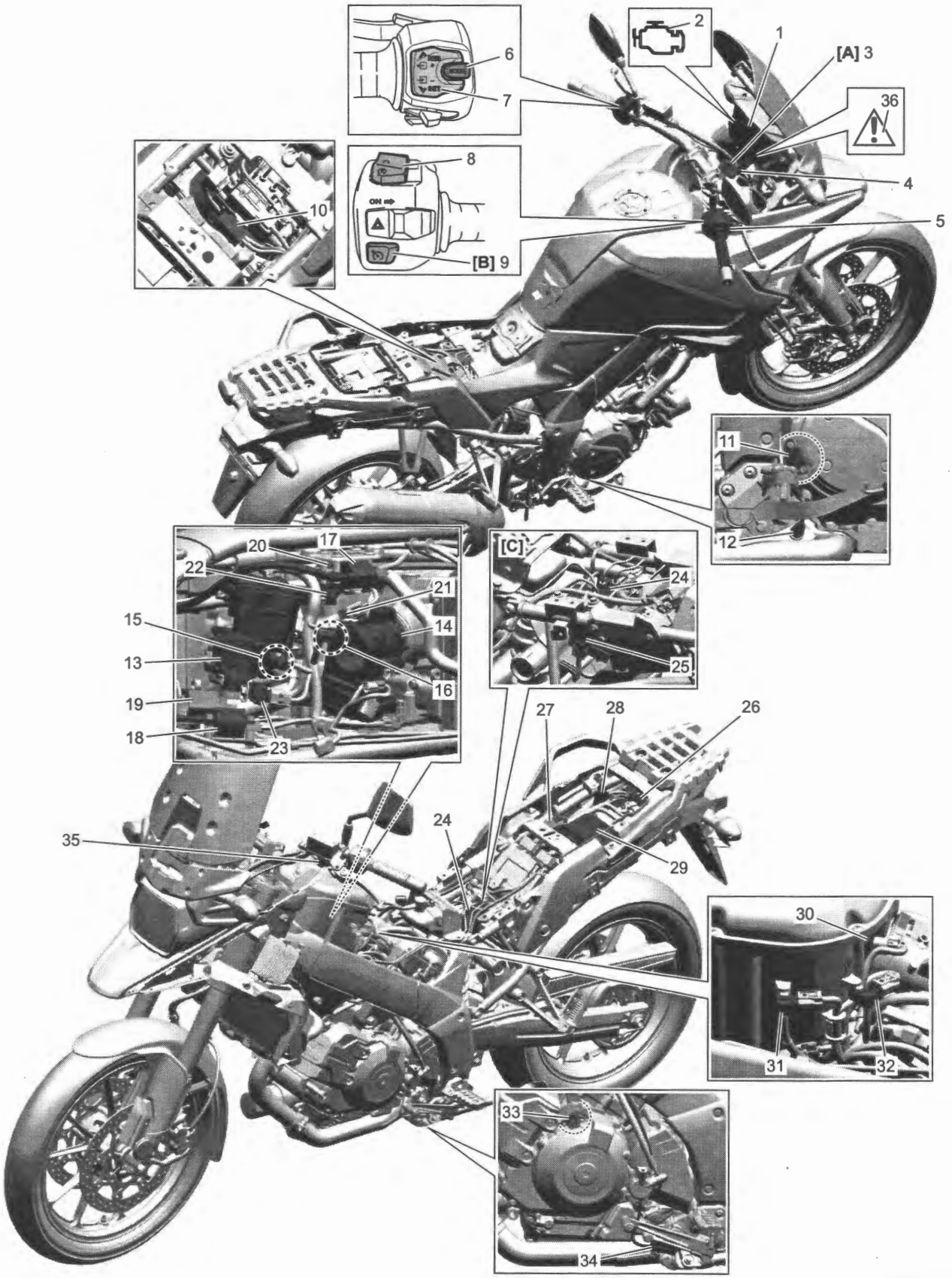

IL06L1110157-02

[A]: With immobilizer control system	11. GP switch	24. ABS control unit/HU
[B]: With cruise control system	12. HO2 sensor	25. IMU
[C]: With motion track brake system	13. Throttle body #1 (incorporating TP sensor (main and sub) and throttle valve motor)	26. Relay box (incorporating FP relay, throttle valve motor relay, cooling fan relay and starter sub relay)
1. Combination meter	14. Throttle body #2 (incorporating TP sensor (main and sub) and throttle valve motor)	27. Starter relay
2. MIL	15. Fuel injector #1	28. Mode select coupler (6P)
3. Immobilizer antenna	16. Fuel injector #2	29. ECM
4. Ignition switch	17. Ignition coil #11	30. IAT sensor
5. Throttle grip assembly (incorporating accelerator position sensor (main and sub))	18. Ignition coil #12	31. IAP sensor #1
6. Mode switch	19. Ignition coil #21	32. IAP sensor #2
7. Select switch	20. Ignition coil #22	33. CKP sensor
8. Engine stop / starter switch	21. ECT sensor	34. Side-stand switch
9. Cruise control switch	22. PAIR control solenoid valve	35. Clutch lever position switch
10. TO sensor	23. EVAP system purge control solenoid valve	36. Master warning indicator light

Diagnostic Information and Procedures

Engine Control System Check

BENL06L21104001

Refer to the following items for the details of each step.

Step 1

Customer complaint analysis

1) Perform customer complaint analysis. ☞(Page 1A-9)

Was customer complaint analysis performed?

Yes — Go to Step 2.

No — Perform customer complaint analysis.

Step 2

DTC check

1) Check for DTCs (including pending DTCs). ☞(Page 1A-11)

Is there any DTC(s)?

Yes — Check and repair according to applicable DTC troubleshooting, and go to Step 5.

No — Go to Step 3.

Step 3

Visual inspection

1) Perform visual inspection. ☞(Page 1A-11)

Is there any faulty condition?

Yes — Repair or replace defective part, and go to Step 5.

No — Go to Step 4.

Step 4

Trouble symptom confirmation

1) Check trouble symptom. ☞(Page 1A-11)

Is trouble symptom identified?

Yes — Perform "Engine Symptom Diagnosis" (Page 1A-25), and go to Step 5.

No — Go to Step 5.

Step 5

Final confirmation test

1) Perform final confirmation test. ☞(Page 1A-11)

Does the trouble recur?

Yes — Go to Step 2.

No — End.

Step 1: Customer Complaint Analysis

Record details of the problem (failure, complaint) and how it occurred as described by the customer. For this purpose, use of such an inspection form such as following will facilitate collecting information to the point required for proper analysis and diagnosis.

NOTE

This form is a standard sample. The form should be modified according to conditions and characteristic of each market.

EXAMPLE: CUSTOMER PROBLEM INSPECTION FORM

User name:	**Model:**	**VIN:**	
Date of issue:	Date Reg.:	Date of problem:	Mileage:

MIL condition	□ Always ON / □ Sometimes ON / □ Always OFF / □ Good condition
Master warning indicator light condition	□ Always ON / □ Sometimes ON / □ Always OFF / □ Good condition
Malfunction display/code	User mode: □ No display / □ Malfunction display ( )
	Dealer mode: □ No code / □ Malfunction code ( )

PROBLEM SYMPTOMS	
□ **Difficult Starting** □ No cranking □ No initial combustion □ No combustion □ Poor starting at (□ cold / □ warm / □ always) □ Other	□ **Poor Driveability** □ Hesitation on acceleration □ Back fire / □ After fire □ Lack of power □ Surging □ Abnormal knocking □ Engine rpm jumps briefly □ Other
□ **Poor Idling** □ Poor fast Idle □ Abnormal idling speed (□ High / □ Low) (r/min) □ Unstable □ Hunting (r/min to r/min) □ Other	□ **Engine Stall when** □ Immediately after start □ Throttle valve is opened □ Throttle valve is closed □ Load is applied □ Other
□ OTHERS:	

MOTORCYCLE/ENVIRONMENTAL CONDITION WHEN PROBLEM OCCURS	
Environmental condition	
Weather Temperature Frequency	□ Fair / □ Cloudy / □ Rain / □ Snow / □ Always / □ Other □ Hot / □ Warm / □ Cool / □ Cold (°C / °F) / □ Always □ Always / □ Sometimes (times / day, month) / □ Only once □ Under certain condition
Road	□ Urban / □ Suburb / □ Highway / □ Mountainous (□ Uphill / □ Downhill) □ Tarmacadam / □ Gravel / □ Other
Motorcycle condition	
Engine condition	□ Cold / □ Warming up phase / □ Warmed up / □ Always / □ Other at starting □ Immediately after start / □ Racing without load / □ Engine speed (r/min)
Motorcycle condition	During driving: □ Constant speed / □ Accelerating / □ Decelerating □ Right hand corner / □ Left hand corner □ At stop / □ Motorcycle speed when problem occurs (km/h, mile/h) □ Other:

IL08L1110163-02

Step 2: DTC Check
First, check DTC (including pending DTCs). ☞(Page 1A-11)

Step 3: Visual Inspection
As a preliminary step, perform visual check of the items that support proper function of the engine. ☞(Page 1A-24)

Step 4: Trouble Symptom Confirmation
Based on information obtained in "Step 1: Customer Complaint Analysis" (Page 1A-9), check trouble symptoms.

Step 5: Final Confirmation Test
Check that the problem symptom has gone and engine is free from any abnormal conditions. If what has been repaired is related to the malfunction DTC, clear the DTC referring to "DTC Clearance" (Page 1A-12) and confirm that the DTC is not indicated, based on information obtained in "Step 1: Customer Complaint Analysis" (Page 1A-9).

DTC Check

BENL06L21104002

NOTE

- **Do not disconnect the coupler from ECM, battery cable from battery, ECM ground wire from engine or fuse before confirming DTC stored in memory. Such disconnection will erase memorized information in ECM memory.**
- **Before checking DTC, read "User Mode and Dealer Mode" under "Self-Diagnosis Function" (Page 1A-1) carefully to have good understanding as to what functions are available and how to use it.**

Use of SDS-II

1) Turn the ignition switch OFF.
2) Remove the rear seat. ☞(Page 9D-27)
3) Connect the conversion cable (ISO) to mode select coupler (6P) (1).

   Special tool
   (A): 09904–41070

4) Connect the SDS-II to conversion cable (ISO).

   Special tool
   (B): 09904–41031
   09904–41041

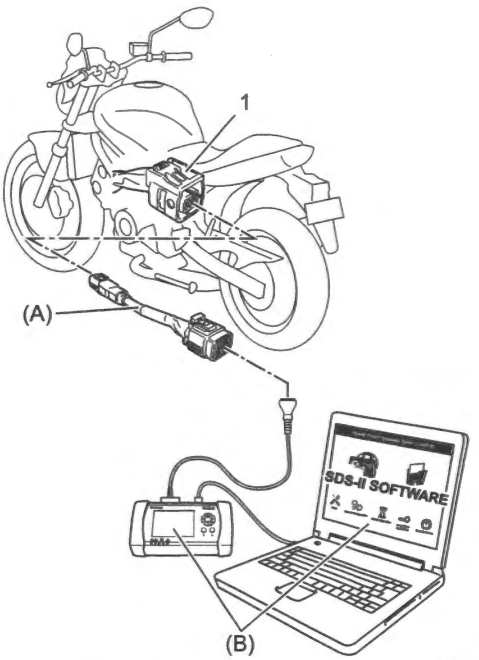

IL06L1110160-02

5) Turn the ignition switch ON.
6) Read DTC according to instructions displayed on SDS-II and print it or write it down. Refer to SDS-II operation manual for further details.

NOTE

- **If communication between SDS-II and ECM is not possible, perform the following checks.**
  - **Check wire harness between mode select coupler (6P) and ECM coupler.**
  - **Check DIG-cable between mode select coupler (6P) and SDS-II. If necessary, check DIG-cable and conversion cable (ISO) by substituting a known-good cable.**
  - **Check CAN communication system. ☞(Page 10H-4)**
  - **Check ECM power circuit and ground circuit. ☞(Page 1A-133)**
- **Not only SDS-II used for detecting DTCs but also for reproducing and checking on screen the failure condition as described by customers using the trigger. How to use trigger referring to the SDS-II operation manual for further details.**

7) Close the SDS-II and turn the ignition switch OFF.
8) Disconnect the SDS-II from conversion cable (ISO).
9) Disconnect the conversion cable (ISO) from mode select coupler (6P).
10) Install the removed parts.

Use of Mode Select Switch

1) Remove the rear seat. ☞(Page 9D-27)
2) Connect the special tool to the mode select coupler (6P) (1) at the wiring harness.

Special tool
(A): 09930–83130

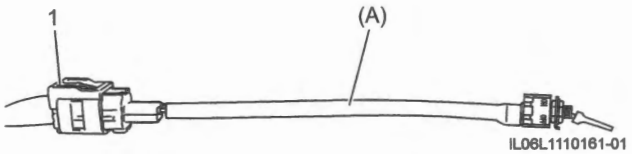

IL06L1110161-01

3) Start the engine or crank the engine for more than 4 seconds.
4) Turn the special tool's switch ON.



IJ10K1110012-01

5) Check the DTC (1) to determine the malfunction part. ☞(Page 1A-13)

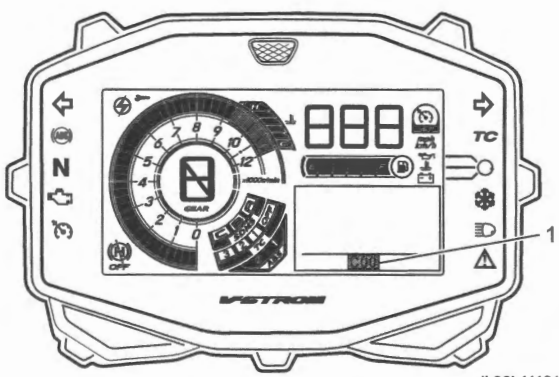

IL06L1110155-02

DTC Clearance

BENL06L21104003

NOTE

The malfunction code is memorized in the ECM also when the lead wire coupler of any sensor is disconnected. Therefore, when a lead wire coupler has been disconnected in the diagnosis, erase the stored past DTC.

1) Turn the ignition switch OFF.
2) Remove the rear seat. ☞(Page 9D-27)
3) Connect the conversion cable (ISO) to mode select coupler (6P) (1).

Special tool
(A): 09904–41070

4) Connect the SDS-II to conversion cable (ISO).

Special tool
(B): 09904–41031
09904–41041

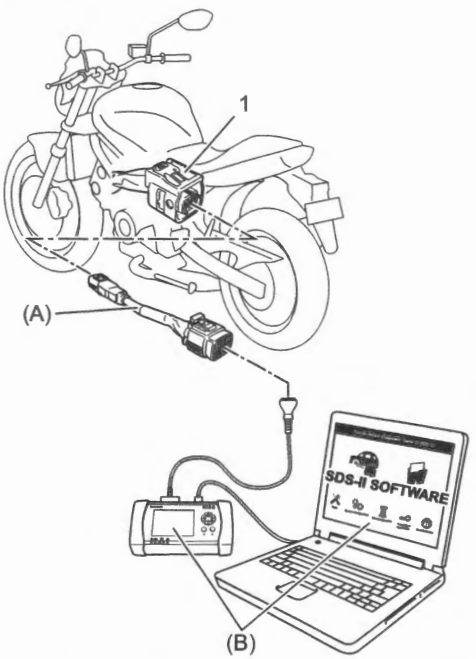

IL06L1110160-02

5) Turn the ignition switch ON.
6) Clear DTC according to instructions displayed on SDS-II. Refer to SDS-II operation manual for further details.

NOTE

If communication between SDS-II and ECM is not possible, perform the following checks.

- **Check wire harness between mode select coupler (6P) and ECM coupler.**
- **Check DIG-cable between mode select coupler (6P) and SDS-II. If necessary, check DIG-cable and conversion cable (ISO) by substituting a known-good cable.**
- **Check CAN communication system. ☞(Page 10H-4)**
- **Check ECM power circuit and ground circuit. ☞(Page 1A-133)**

7) Close the SDS-II and turn the ignition switch OFF.
8) Disconnect the SDS-II from mode select coupler (6P).
9) Install the removed parts.

DTC Table

BENL06L21104004

NOTE

- **When DTC P0300 / P0301 / P0302 is detected, MIL blinks or lights up according to detecting condition.**
- **"1 D/C / 3 D/C" in "DTC detection logic" column of table below means DTC detecting logic varies depending on DTC detecting condition.**
- ***1: When C code is "C00" and if the master warning indicator light is on, check the DTC P2505 is detected by using the SDS-II. If it is not detected, a malfunction may be detected by other systems.**
- **Some DTCs do not have the corresponding C codes.**

DTC		DTC name	DTC detecting condition	DTC detection logic	MIL	Master warning indicator light
-	C00	None	—	—	OFF	OFF
P0030	C44	HO2 Sensor Heater Control Circuit Bank 1 Sensor 1 ☞(Page 1A-32)	HO2 sensor heater circuit is shorted to ground or open.	3 D/C	ON	OFF
P0105	C13	IAP Sensor Circuit ☞(Page 1A-34)	IAP sensor #1 output voltage is higher than 4.90 V.	3 D/C	ON	OFF
P0106		IAP Sensor Circuit Range / Performance ☞(Page 1A-34)	Any of the following conditions is met. • IAP sensor #1 vacuum hose has come off. • Measured IAP sensor #1 output voltage is out of the specified range.	3 D/C	ON	OFF
P0107		IAP Sensor Circuit Low ☞(Page 1A-34)	IAP sensor #1 output voltage is lower than 0.10 V.	3 D/C	ON	OFF
P0110	C21	IAT Sensor 1 Circuit ☞(Page 1A-37)	IAT sensor output voltage is lower than 4.65 V.	3 D/C	ON	OFF
P0111		IAT Sensor 1 Circuit Response Malfunction ☞(Page 1A-37)	IAT sensor output voltage does not change, under the specified condition.	3 D/C	ON	OFF
P0112		IAT Sensor 1 Circuit Low ☞(Page 1A-37)	IAT sensor output voltage is lower than 0.10 V.	3 D/C	ON	OFF

DTC		DTC name	DTC detecting condition	DTC detection logic	MIL	Master warning indicator light
P0115	C15	ECT Sensor Circuit ☞(Page 1A-39)	ECT sensor output voltage is higher than 4.80 V.	3 D/C	ON	OFF
P0116		ECT Sensor Circuit Response Malfunction ☞(Page 1A-39)	ECT sensor output voltage does not change, under the specified condition.	3 D/C	ON	OFF
P0117		ECT Sensor Circuit Low ☞(Page 1A-39)	ECT sensor output voltage is lower than 0.10 V.	3 D/C	ON	OFF
P0120	C29	TP Sensor / Switch "A" Circuit ☞(Page 1A-41)	TP sensor #1 (main) output voltage is lower than 0.10 V.	1 D/C	ON	OFF
P0123		TP Sensor / Switch "A" Circuit High ☞(Page 1A-41)	TP sensor #1 (main) output voltage is higher than 4.30 V.	1 D/C	ON	OFF
P0130	C44	O2 Sensor Circuit Bank 1 Sensor 1 ☞(Page 1A-44)	HO2 sensor is not activated.	3 D/C	ON	OFF
P0132		O2 Sensor Circuit High Voltage Bank 1 Sensor 1 ☞(Page 1A-44)	HO2 sensor output voltage is higher than 4.90 V.	3 D/C	ON	OFF
P0133		O2 Sensor Circuit Slow Response (Bank1 Sensor1) ☞(Page 1A-44)	Shifting time between rich and lean of HO2 sensor is longer than specified time.	3 D/C	ON	OFF
P0171	C45	System Too Lean Bank 1 ☞(Page 1A-46)	Fuel trim correction is higher than specified value for specified time under the specified condition.	3 D/C	ON	OFF
P0172		System Too Rich Bank 1 ☞(Page 1A-46)	Fuel trim correction is lower than specified value for specified time under the specified condition.	3 D/C	ON	OFF
P0201	C32	Injector Circuit / Open – Cylinder 1 ☞(Page 1A-48)	Fuel injector #1 signal is interrupted by 8 times or more continuity although CKP signal is detected.	1 D/C	ON	OFF
P0202	C33	Injector Circuit / Open – Cylinder 2 ☞(Page 1A-48)	Fuel injector #2 signal is interrupted by 8 times or more continuity although CKP signal is detected.	1 D/C	ON	OFF
P0220	C29	TP Sensor / Switch "B" Circuit ☞(Page 1A-52)	TP sensor #1 (sub) output voltage is lower than 0.50 V.	1 D/C	ON	OFF
P0223		TP Sensor / Switch "B" Circuit High ☞(Page 1A-52)	TP sensor #1 (sub) output voltage is higher than 4.75 V.	1 D/C	ON	OFF
P0225	C86	TP Sensor / Switch "C" Circuit ☞(Page 1A-55)	TP sensor #2 (main) output voltage is lower than 0.10 V.	1 D/C	ON	OFF
P0228		TP Sensor / Switch "C" Circuit High ☞(Page 1A-55)	TP sensor #2 (main) output voltage is higher than 4.30 V.	1 D/C	ON	OFF
P0232	C41	FP Secondary Circuit High ☞(Page 1A-58)	Voltage is input to ECM although the FP relay is OFF.	1 D/C	OFF	ON
P023F		FP Secondary Circuit / Open ☞(Page 1A-58)	No voltage is input to ECM although the FP relay is ON.	1 D/C	OFF	ON

DTC		DTC name	DTC detecting condition	DTC detection logic	MIL	Master warning indicator light
P0300	C74	Random / Multiple Cylinder Misfire Detected ☞(Page 1A-61)	Any of the following conditions is met. • Misfire, which causes damage to the catalyst, is detected at 2 cylinders, under the specified condition. (The MIL blinks) • Misfire, which affects exhaust emission adversely, is detected at 2 cylinders, under the specified condition.	3 D/C	ON	OFF
P0301		Cylinder 1 Misfire Detected ☞(Page 1A-61)	Any of the following conditions is met. • Misfire, which causes damage to the catalyst, is detected at cylinder #1, under the specified condition. (The MIL blinks) • Misfire, which affects exhaust emission adversely, is detected at cylinder #1, under the specified condition.	3 D/C	ON	OFF
P0302		Cylinder 2 Misfire Detected ☞(Page 1A-61)	Any of the following conditions is met. • Misfire, which causes damage to the catalyst, is detected at cylinder #2, under the specified condition. (The MIL blinks) • Misfire, which affects exhaust emission adversely, is detected at cylinder #2, under the specified condition.	3 D/C	ON	OFF
P0335	C12	CKP Sensor "A" Circuit ☞(Page 1A-63)	CKP sensor signal is not input to ECM for specified time, after receiving the starter relay ON signal.	1 D/C	ON	OFF
P0351	C24	Ignition Coil "A" Primary / Secondary Circuit ☞(Page 1A-65)	Ignition coil #11 signal is interrupted by 8 times or more continuity although CKP signal is detected.	1 D/C	ON	OFF
P0352	C25	Ignition Coil "B" Primary / Secondary Circuit ☞(Page 1A-65)	Ignition coil #21 signal is interrupted by 8 times or more continuity although CKP signal is detected.	1 D/C	ON	OFF
P0353	C26	Ignition Coil "C" Primary / Secondary Circuit ☞(Page 1A-65)	Ignition coil #12 signal is interrupted by 8 times or more continuity although CKP signal is detected.	1 D/C	ON	OFF
P0354	C27	Ignition Coil "D" Primary / Secondary Circuit ☞(Page 1A-65)	Ignition coil #22 signal is interrupted by 8 times or more continuity although CKP signal is detected.	1 D/C	ON	OFF
P0410	C61	PAIR System ☞(Page 1A-66)	PAIR air flow volume is out of the specified range, under the specified condition.	3 D/C	ON	OFF

DTC		DTC name	DTC detecting condition	DTC detection logic	MIL	Master warning indicator light
P0412	C61	PAIR System Switching Valve "A" Circuit ☞(Page 1A-67)	PAIR control solenoid valve drive circuit is shorted to ground or open.	3 D/C	ON	OFF
P0444	C62	EVAP System Purge Control Valve Circuit Open ☞(Page 1A-69)	EVAP system purge control solenoid valve voltage is lower than 3.00 V although the EVAP system control solenoid valve is OFF.	3 D/C	ON	OFF
P0480	C60	Fan 1 Control Circuit ☞(Page 1A-71)	Cooling fan relay drive circuit is shorted to ground or open.	3 D/C	OFF	ON
P0500	C16	Vehicle Speed Sensor "A" ☞(Page 1A-73)	Any of the following conditions is met. • Front wheel speed is 0 km/h (0 mile/h) for a few seconds at motorcycle deceleration. • Front wheel speed is 0 km/h (0 mile/h) for a few sec or more although the rear wheel speed is higher than 10km/h (6 mile/h). • Front wheel speed signal does not become stable	3 D/C	ON	OFF
P050B	C84	Cold Start Ignition Timing Performance ☞(Page 1A-75)	Ignition timing for catalyst warming up is out of the specified range.	3 D/C	ON	OFF
P0602	—	Control Module Programming Error ☞(Page 1A-76)	ECM internal failure (data programming error).	1 D/C	OFF	ON
P0607	C68	Control Module Performance ☞(Page 1A-76)	ECM internal processor failure.	1 D/C	ON	OFF
P0830	C72	Clutch Switch "A" Circuit ☞(Page 1A-77)	Clutch lever position switch is continuity ON for more than specified time with motorcycle running.	3 D/C	ON	OFF
P0850	C81	Park / Neutral Switch Input Circuit ☞(Page 1A-79)	Neutral switch is continuity ON for more than specified time with motorcycle running.	3 D/C	ON	OFF
P0915	C31	GP Sensor Circuit Range/ Performance ☞(Page 1A-81)	Difference between measured gear position and estimated gear position is out of the specified range.	3 D/C	ON	OFF
P0916		GP Sensor Circuit Low ☞(Page 1A-81)	Gear position signal voltage is lower than 0.2 V.	3 D/C	ON	OFF
P1105	C17	IAP Sensor Circuit Bank 2 ☞(Page 1A-83)	IAP sensor #2 output voltage is higher than 4.90 V.	3 D/C	ON	OFF
P1106		IAP Sensor Circuit Range / Performance Bank2 ☞(Page 1A-83)	Any of the following conditions is met. • IAP sensor #2 vacuum hose has come off. • Measured IAP sensor #2 output voltage is out of the specified range.	3 D/C	ON	OFF
P1107		IAP Sensor Circuit Low Bank2 ☞(Page 1A-83)	IAP sensor #2 output voltage is lower than 0.10 V.	3 D/C	ON	OFF

DTC		DTC name	DTC detecting condition	DTC detection logic	MIL	Master warning indicator light
P1109	C13	IAP Sensor Hose Fault ☞(Page 1A-86)	IAP sensor #1 and IAP sensor #2 are connected to intake pipe of opposite side.	3 D/C	ON	OFF
P1610	C42	Ignition Switch Signal Circuit	**Without immobilizer control system** Ignition switch signal is not input to the ECM. ☞(Page 1A-87) **With immobilizer control system** Refer to "DTC Table" in Section 10C (Page 10C-3).	1 D/C	OFF	ON
P1622	C68	Control Module ROM Error ☞(Page 1A-87)	EEPROM in ECM is corrupted.	1 D/C	OFF	ON
P1650	C71	Inertial Measurement Unit ☞(Page 1A-88)	ECM receives abnormal signal from IMU.	3 D/C	OFF	ON
P1700	C23	TO Sensor Circuit ☞(Page 1A-89)	TO sensor output voltage is higher than 4.60 V.	1 D/C	OFF	ON
P1701		TO Sensor Circuit Low ☞(Page 1A-89)	TO sensor output voltage is lower than 0.20 V.	1 D/C	OFF	ON
P2101	C30	Throttle Actuator "A" Control Motor Circuit Range / Performance ☞(Page 1A-91)	Any of the following conditions is met. • Throttle valve motor #1 and/or its circuit malfunction is detected. • Throttle valve #1 sticking is detected • Difference between measured throttle valve #1 position and targeted throttle valve #1 position is out of the specified range. • The target value of throttle valve #1 position does not become stable. • Throttle valve motor #1 power supply circuit malfunction is detected. • Throttle valve #1 does not become fully closed position. • TP sensor #1 malfunction is detected.	1 D/C	ON	OFF
P2102	C30	Throttle Actuator "A" Control Motor Circuit Low ☞(Page 1A-95)	Power supply voltage to throttle valve motor #1 is lower than specified value although the battery voltage is normal.	1 D/C	ON	OFF

DTC		DTC name	DTC detecting condition	DTC detection logic	MIL	Master warning indicator light
P210B	C86	Throttle Actuator "B" Control Motor Circuit Range / Performance ☞(Page 1A-99)	Any of the following conditions is met. • Throttle valve motor #2 and/or its circuit malfunction is detected. • Throttle valve #2 sticking is detected • Difference between measured throttle valve #2 position and targeted throttle valve #2 position is out of the specified range. • The target value of throttle valve #2 position does not become stable. • Throttle valve motor #2 power supply circuit malfunction is detected. • Throttle valve #2 does not become fully closed position. • TP sensor #2 malfunction is detected.	1 D/C	ON	OFF
P210C	C86	Throttle Actuator "B" Control Motor Circuit Low ☞(Page 1A-103)	Power supply voltage to throttle valve motor #2 is lower than specified value although the battery voltage is normal.	1 D/C	ON	OFF
P210E	C86	TP Sensor / Switch "C" / "F" Voltage Correlation ☞(Page 1A-107)	Difference between TP sensor #2 (main) value and TP sensor #2 (sub) value is out of the specified range.	1 D/C	ON	OFF
P2120	C14	TP Sensor / Switch "D" Circuit ☞(Page 1A-109)	Accelerator position sensor (main) output voltage is lower than 0.10 V.	1 D/C	ON	OFF
P2123		TP Sensor / Switch "D" Circuit High ☞(Page 1A-109)	Accelerator position sensor (main) output voltage is higher than 3.80 V.	1 D/C	ON	OFF
P2125	C14	TP Sensor / Switch "E" Circuit ☞(Page 1A-111)	Accelerator position sensor (sub) output voltage is lower than 0.10 V.	1 D/C	ON	OFF
P2128		TP Sensor / Switch "E" Circuit High ☞(Page 1A-111)	Accelerator position sensor (sub) output voltage is higher than 4.70 V.	1 D/C	ON	OFF
P2130	C86	TP Sensor / Switch "F" Circuit ☞(Page 1A-113)	TP sensor #2 (sub) output voltage is lower than 0.50 V.	1 D/C	ON	OFF
P2133		TP Sensor / Switch "F" Circuit High ☞(Page 1A-113)	TP sensor #2 (sub) output voltage is higher than 4.75 V.	1 D/C	ON	OFF
P2135	C29	TP Sensor / Switch "A" / "B" Voltage Correlation ☞(Page 1A-115)	Difference between TP sensor #1 (main) value and TP sensor #1 (sub) value is out of the specified range.	1 D/C	ON	OFF
P2138	C14	TP Sensor / Switch "D" / "E" Voltage Correlation ☞(Page 1A-117)	Difference between Accelerator position sensor (main) value and Accelerator position sensor (sub) value is out of the specified range.	1 D/C	ON	OFF

DTC		DTC name	DTC detecting condition	DTC detection logic	MIL	Master warning indicator light
P2158	C91	Vehicle Speed Sensor "B" ☞(Page 1A-119)	Any of the following conditions is met, at motorcycle deceleration. • Rear wheel speed is 0 km/h (0 mile/h) for 6 seconds or more, at motorcycle deceleration. • Rear wheel speed is 0 km/h (0 mile/h) for 3 sec or more although the front wheel speed is higher than 10km/h (6 mile/h). • Rear wheel speed signal does not become stable	3 D/C	ON	OFF
P2505	C00 *1	ECM Power Input Signal ☞(Page 1A-121)	Power source for ECM is not supplied.	3 D/C	OFF	ON
P2A00	C44	O2 Sensor Circuit Range / Performance Bank 1 Sensor 1 ☞(Page 1A-123)	HO2 sensor output voltage is stayed for specified time or more.	1 D/C	ON	OFF
U0073	C83	Control Module Communication Bus Off	Refer to "CAN DTC (Lost Communication and Communication Bus Off) Table" in Section 10H (Page 10H-6)	1 D/C	OFF	ON
U0121	C83	Lost Communication With ABS Control Module		1 D/C	OFF	ON
U0123	C83	Lost Communication With IMU		1 D/C	OFF	ON
U0155	C83	Lost Communication With Instrument Panel Cluster (IPC) Control Module		1 D/C	OFF	ON

Fail-Safe Table

BENL06L21104005

Engine control system is provided with fail-safe function to allow the engine to start and the motorcycle to run in a minimum performance necessary even under malfunction condition.

NOTE

The engine can start and can run even if the signal in the table is not received from each sensor. But, the engine running condition is not complete, providing only emergency help (by fail-safe circuit). In this case, it is necessary to bring the motorcycle to the workshop for complete repair.

Item	Fail-safe mode	Starting ability	Running ability
HO2 sensor heater	• ECM stops controlling HO2 sensor heater. • Feedback compensation is inhibited. (Air / fuel ratio is fixed to normal.)	"YES"	"YES"
IAP sensor #1	**IAP Sensor #2 is normal:** • ECM controls various engine control using signal of IAP Sensor #2. • Atmospheric pressure is estimated from value of IAP sensor #2.	"YES"	"YES"
	IAP Sensor #2 is abnormal: Intake air pressure value is fixed to 101.3 kPa (760 mmHg).		
	Atmospheric pressure value is fixed to 101.3 kPa (760 mmHg).		

Item	Fail-safe mode	Starting ability	Running ability
IAP sensor #2	**IAP Sensor #1 is normal:** • ECM controls various engine control using signal of IAP Sensor #1. • Atmospheric pressure is estimated from value of IAP sensor #1.	"YES"	"YES"
	IAP Sensor #1 is abnormal: Intake air pressure value is fixed to 101.3 kPa (760 mmHg).		
	Atmospheric pressure value is fixed to 101.3 kPa (760 mmHg).		
IAT sensor	Intake air temperature value is fixed 25.0 °C (77 °F).	"YES"	"YES"
ECT sensor	• Engine temperature value is fixed to 80 °C (176 °F) • Cooling fan is fixed to on state.	"YES"	"YES"
TP sensor #1 / #2	**One of the TP sensor (main) or TP sensor (sub) is normal:** Throttle grip opening value is fixed to fully closed position.	"YES"	"NO"
HO2 sensor	• ECM stops controlling HO2 sensor heater. • Feedback compensation is inhibited. (Air / fuel ratio is fixed to normal.)	"YES"	"YES"
Ignition coil #11 / #12	Cylinder #1 fuel-cut	"YES"	"YES"
		Cylinder #2 can run	
Ignition coil #21 / #22	Cylinder #2 fuel-cut	"YES"	"YES"
		Cylinder #1 can run	
PAIR control solenoid valve	ECM stops controlling PAIR control solenoid valve.	"YES"	"YES"
EVAP system purge control solenoid valve	ECM stops controlling EVAP system purge control solenoid valve.	"YES"	"YES"
Cooling fan relay	ECM stops controlling cooling fan relay.	"YES"	"YES"
Clutch lever position switch	Clutch lever position switch is fixed to OFF.	"YES"	"YES"
GP switch (Neutral signal)	Neutral switch is fixed to OFF.	"YES"	"YES"
GP switch (Gear position signal)	It is either following depending on a failed state. • Gear position signal is fixed to specified gear position. • Gear position signal is fixed the position before occurrence of failure.	"YES"	"YES"
Accelerator position sensor	Throttle grip opening value is fixed to fully closed position.	"YES"	"NO"

Scan Tool Data

BENL06L21104006

As the data values are standard values estimated on the basis of values obtained from the normally operating motorcycles using a SDS-II, use them as reference values.
Even when the vehicle is in good condition, there may be cases where the checked value does not fall within each specified data range. Therefore, judgment as abnormal should not be made depending on these data alone.

NOTE

- **If communication between SDS-II and ECM is not possible, perform the following checks.**
  - **Check wire harness between mode select coupler (6P) and ECM coupler.**
  - **Check DIG-cable between mode select coupler (6P) and SDS-II. If necessary, check DIG-cable and conversion cable (ISO) by substituting a known-good cable.**
  - **Check CAN communication system. ☞(Page 10H-4)**
  - **Check ECM power circuit and ground circuit. ☞(Page 1A-133)**
- ***1: The value of throttle position displayed on SDS-II is different from value of mechanical throttle valve opening.**
  - **Mechanical throttle valve opening (Ignition switch: ON):**
    - **Throttle grip is fully close position: Approx. 7.0 – 11.5 °**
    - **Throttle grip is fully open position: Approx. 90 °**
- ***2: 35 kW version is approximately 50km/h (31 mile/h) to 120km/h (75 mile/h).**

Scan tool data	Normal condition / Reference value	Motorcycle condition
Short term fuel trim (Bank1)	Approx. -30 – 30%	Engine: Idle speed after warming up
Long term fuel trim (Bank1)	Approx. -25 – 50%	Engine: Idle speed after warming up
Vehicle speed sensor front	Almost the same as combination meter reading.	Riding condition: While running
Vehicle speed sensor rear	Almost the same as combination meter reading.	Riding condition: While running
Engine speed	Approx. 1300 r/min	Engine: Idle speed after warming up
Manifold absolute pressure "A"	Approx. 100 kPa	Engine: Stopped
	Approx. 30 – 60 kPa	Engine: Idle speed after warming up
Manifold absolute pressure "B"	Approx. 100 kPa	Engine: Stopped
	Approx. 30 – 60 kPa	Engine: Idle speed after warming up
Barometric pressure	Almost the same as measured temperature value.	The barometric pressure is measured and compared with scan tool data reading.
Intake air temperature	Almost the same as measured temperature value.	The intake air temperature is measured and compared with scan tool data reading.
Ambient air temperature	Almost the same as measured temperature value.	The ambient air temperature is measured and compared with scan tool data reading.
Engine coolant temperature	Approx. 80 – 105 °C (176 – 221 °F)	Engine: Idle speed after warming up
Desired idle rpm	Approx. 1300 r/min	Engine: Idle speed after warming up
Gear position	N	Gear position: Neutral
	1	Gear position: 1st
	2	Gear position: 2nd
	3	Gear position: 3rd
	4	Gear position: 4th
	5	Gear position: 5th
	6	Gear position: 6th
Throttle position sensor A output voltage	Approx. 3.6 – 3.8 V	Throttle grip: Fully close position
	Approx. 0.6 – 0.8 V	Throttle grip: Fully open position
Throttle position sensor B output voltage	Approx. 4.0 – 4.4 V	Throttle grip: Fully close position
	Approx. 1.2 – 1.4 V	Throttle grip: Fully open position

Scan tool data	Normal condition / Reference value	Motorcycle condition	
Throttle position sensor C output voltage	Approx. 3.4 – 3.8 V	Throttle grip: Fully close position	
	Approx. 0.6 – 0.8 V	Throttle grip: Fully open position	
Throttle position sensor G output voltage	Approx. 4.2 – 4.4 V	Throttle grip: Fully close position	
	Approx. 1.2 – 1.4 V	Throttle grip: Fully open position	
Accelerator position sensor D output voltage	Approx. 0.5 – 0.7 V	Throttle grip: Fully close position	
	Approx. 3.1 – 3.3 V	Throttle grip: Fully open position	
Accelerator position sensor E output voltage	Approx. 0.8 – 1.0 V	Throttle grip: Fully close position	
	Approx. 4.1 – 4.3 V	Throttle grip: Fully open position	
Absolute throttle position angle bank1	Approx. 40° *1	Throttle grip: Fully close position	
	Approx. 120° *1	Throttle grip: Fully open position	
Absolute throttle position angle bank2	Approx. 40° *1	Throttle grip: Fully close position	
	Approx. 120° *1	Throttle grip: Fully open position	
Absolute accelerator position angle	Approx. 14° *1	Throttle grip: Fully close position	
	Approx. 84° *1	Throttle grip: Fully open position	
Throttle motor voltage (Bank1)	Battery voltage	—	
Throttle motor voltage (Bank2)	Battery voltage	—	
Battery voltage	Approx. 0 V	Engine: Stopped	
	Approx. 12 – 15 V	Engine: Running	
Oxygen sensor1 (Bank1)	0 – 1.0 V	Engine: Idle speed after warming up	
Inertial sensor output Ox	**Without motion track brake system**		
	–327.68 deg/s	Any condition	
	With motion track brake system		
	3.12 to -3.12 deg/s	Static	Side-stand position with steering fully turned to left side.
	Value increases to positive side.	Dynamic	Raise to upright position from side-stand position. (While raising)
Inertial sensor output Oy	**Without motion track brake system**		
	–327.68 deg/s	Any condition	
	With motion track brake system		
	3.12 to -3.12 deg/s	Static	Side-stand position with steering fully turned to left side.
	Value increases to positive side.	Dynamic	Raise to upright position from side-stand position. (While raising)
Inertial sensor output Oz	**Without motion track brake system**		
	–327.68 deg/s	Any condition	
	With motion track brake system		
	3.12 to -3.12 deg/s	Static	Side-stand position with steering fully turned to left side.
	Value increases to positive or negative side.	Dynamic	Raise to upright position from side-stand position. (While raising)
Select switch (Mode)	On	Mode switch: Pushed	
	Off	Mode switch: Released	
Radiator fan	On	Cooling fan: Running	
	Off	Cooling fan: Stopped	
EVAP canister	On	EVAP system purge control solenoid valve: ON	
	Off	EVAP system purge control solenoid valve: OFF	
Select switch (Up)	On	"RES / UP" switch: Pushed	
	Off	"RES / UP" switch: Released	
Select switch (Down)	On	"SET / DOWN" switch: Pushed	
	Off	"SET / DOWN" switch: Released	
PAIR control solenoid valve	On	PAIR control solenoid valve: ON	
	Off	PAIR control solenoid valve: OFF	
Neutral switch	GND	Gear position: Neutral	
	Except GND	Gear position: Other than neutral	
Test switch	On	Special Tool (Mode selection switch): Connected to the mode select coupler (6P), and ON	
	Off	Special Tool (Mode selection switch): Not connected to the mode select coupler (6P)	

Scan tool data	Normal condition / Reference value	Motorcycle condition
Anti-theft type	Normal	DTC P1610 (C42): Not detected
	Abnormal	DTC P1610 (C42): Detected
Tip over sensor	On	Motorcycle condition: Leaning 45° or more
	Off	Motorcycle condition: Normal
Clutch switch	On	Clutch lever: Grasped
	Off	Clutch lever: Released
Starter switch	On	Engine stop / starter switch ("START" position): Pushed
	Off	Engine stop / starter switch ("START" position): Released
Oxygen sensor heater1	On	ECM sends HO2 sensor heater drive signal to HO2 sensor.
	Off	ECM does not send HO2 sensor heater drive signal to HO2 sensor.
Set switch (Short)	On	"SET / DOWN" switch: Pushed (For a short time)
	Off	"SET / DOWN" switch: Released
Set switch (Long)	On	"SET / DOWN" switch: Pushed (For a long time)
	Off	"SET / DOWN" switch: Released
Up switch (Short)	On	"RES / UP" switch: Pushed (For a short time)
	Off	"RES / UP" switch: Released
Up switch (Long)	On	"RES / UP" switch: Pushed (For a long time)
	Off	"RES / UP" switch: Released
Down switch (Short)	On	"SET / DOWN" switch: Pushed (For a short time)
	Off	"SET / DOWN" switch: Released
Down switch (Long)	On	"SET / DOWN" switch: Pushed (For a long time)
	Off	"SET / DOWN" switch: Released
Cruise cancel switch	On	Throttle grip: Cruise control cancel switch position (if equipped)
	Off	Throttle grip: Other than cruise control cancel switch position
Turn signal light off	On	Any condition
Turn signal light L SW	Off	Any condition
Turn signal light R SW	Off	Any condition
Fuel cut flag1	On	Engine: Stopped
	Off	Engine: Idle speed
Fuel cut flag2	On	Engine: Stopped
	Off	Engine: Idle speed
Gear position voltage	0 V	Gear position: Neutral
	Approx. 1.7 – 1.9 V	Gear position: 1st
	Approx. 2.1 – 2.4 V	Gear position: 2nd
	Approx. 2.8 – 3.2 V	Gear position: 3rd
	Approx. 3.4 – 3.9 V	Gear position: 4th
	Approx. 4.2– 4.5 V	Gear position: 5th
	Approx. 4.5 – 4.9 V	Gear position: 6th
CAN status (ABS)	0	Any condition (Without motion track brake system)
	1	Any condition (With motion track brake system)
CAN status (IPC)	1	Any condition
CAN status (IMU)	0	Any condition (Without motion track brake system)
	1	Any condition (With motion track brake system)
Power mode	1	Suzuki drive mode selector (SDMS): Mode A
	2	Suzuki drive mode selector (SDMS): Mode B
	3	Suzuki drive mode selector (SDMS): Mode C
Traction control mode	0	Traction control system: OFF
	1	Traction control system: Mode 1
	2	Traction control system: Mode 2
	3	Traction control system: Mode 3

Scan tool data	Normal condition / Reference value	Motorcycle condition
Desired speed (Cruise Controller)	Approx. 50 – 160 km/h (31 – 99 mile/h)*2	Cruise control system: ON
Inertial sensor output Ax axis	**Without motion track brake system**	
	–64.278 m/s^2	Any condition
	With motion track brake system	
	10.92 to 8.63 m/s^2	Side-stand position with steering fully turned to left side.
	Value increases to positive side.	Upright position.
Inertial sensor output Ay axis	**Without motion track brake system**	
	–64.278 m/s^2	Any condition
	With motion track brake system	
	1.36 to -1.72 m/s^2	Side-stand position with steering fully turned to left side.
	Value increases to positive side.	Upright position.
Inertial sensor output Az axis	**Without motion track brake system**	
	–64.278 m/s^2	Any condition
	With motion track brake system	
	-0.97 to -4.02 m/s^2	Side-stand position with steering fully turned to left side.
	Value increases to positive side.	Upright position.

Visual Inspection

BENL06L21104007

Prior to diagnosis using the mode select switch, perform the following visual inspections. The reason for visual inspection is that mechanical failures (such as oil leakage) cannot be displayed on the screen with the use of mode select switch or SDS-II.

Inspection item		Referring section
Engine oil	Level	"Engine Oil Inspection" in Section 1E (Page 1E-4)
	Leakage	
Engine coolant	Level	"Engine Coolant Level Inspection" in Section 1F (Page 1F-7)
	Leakage	"Engine Cooling System Inspection" in Section 1F (Page 1F-7)
Fuel	Level	—
	Leakage	"Fuel Hose Inspection" in Section 1G (Page 1G-5)
Air cleaner element	Dirt	"Air Cleaner Element Inspection" in Section 1D (Page 1D-6)
	Clogging	
Battery	Corrosion of terminal	"Battery Visual Inspection" in Section 1J (Page 1J-10)
Fuse	Burning	"Precautions for Electrical Circuit Service" in Section 00 (Page 00-2)
MIL	Operation	"Self-Diagnosis Function" (Page 1A-1)
Each indicator light	Operation	"Combination Meter On-Vehicle Inspection" in Section 9C (Page 9C-10)
Combination meter	Operation	"Combination Meter On-Vehicle Inspection" in Section 9C (Page 9C-10)
Exhaust system	Leakage of exhaust gas	"Exhaust System Inspection" in Section 1K (Page 1K-7)
	Noise	
Harness coupler	Disconnection	"Precautions for Electrical Circuit Service" in Section 00 (Page 00-2)
	Poor contact	

Engine Symptom Diagnosis

BENL06L21104008

Condition	Possible cause	Correction / Reference Item
Engine will not start or is hard to start (Compression too low)	Valve clearance out of adjustment.	*Adjust. ☞(Page 1D-22)*
	Worn valve guides or poor seating of valves.	*Repair or replace. ☞(Page 1D-53)*
	Mistimed valves.	*Adjust. ☞(Page 1D-22)*
	Excessively worn piston rings.	*Replace. ☞(Page 1D-58)*
	Worn-down cylinder bores.	*Replace.* • *Removal: ☞(Page 1D-32)* • *Installation: ☞(Page 1D-36)*
	Too slow starter motor cranking.	*Repair or replace.* • *Repair: ☞(Page 1I-6)* • *Replace: ☞(Page 1I-5)*
	Poor seating of spark plugs.	*Retighten. ☞(Page 1H-6)*
Engine will not start or is hard to start (Plug not sparking)	Defective spark plugs.	*Replace. ☞(Page 1H-6)*
	Too wide spark plug gap.	*Replace. ☞(Page 1H-6)*
	Fouled spark plugs.	*Replace. ☞(Page 1H-6)*
	Wet spark plugs.	*Dry or replace. ☞(Page 1H-6)*
	Defective spark plug cap.	*Replace. ☞(Page 1H-6)*
	Defective ignition coils.	*Replace. ☞(Page 1H-6)*
	Defective CKP sensor.	*Replace.* • *Removal: ☞(Page 1J-5)* • *Installation: ☞(Page 1J-7)*
	Defective ECM.	*Replace. ☞(Page 1C-2)*
	Open-circuited wiring connections.	*Repair or replace. ☞(Page 9A-5)*
	Open or short in high-tension cord.	*Replace. ☞(Page 1H-6)*
Engine will not start or is hard to start (No fuel reaching the intake port)	Clogged fuel filter or fuel hose.	*Clean or replace.* • *Fuel filter: ☞(Page 1G-15)* • *Fuel hose: ☞(Page 1G-5)*
	Defective fuel pump.	*Replace. ☞(Page 1G-10)*
	Defective fuel pump relay.	*Replace. ☞(Page 9A-42)*
	Defective fuel pressure regulator.	*Replace. ☞(Page 1G-12)*
	Defective fuel injector.	*Replace. ☞(Page 1G-16)*
	Defective ECM.	*Replace. ☞(Page 1C-2)*
	Open-circuited wiring connections.	*Repair and replace. ☞(Page 9A-5)*
Engine will not start or is hard to start (Incorrect fuel/air mixture)	Defective fuel pump.	*Replace. ☞(Page 1G-10)*
	Defective fuel pressure regulator.	*Replace. ☞(Page 1G-12)*
	Defective TP sensor.	*Replace. ☞(Page 1D-7)*
	Defective CKP sensor.	*Replace.* • *Removal: ☞(Page 1J-5)* • *Installation: ☞(Page 1J-7)*
	Defective IAP sensor.	*Replace. ☞(Page 1C-4)*
	Defective ECM.	*Replace. ☞(Page 1C-2)*
	Defective ECT sensor.	*Replace. ☞(Page 1C-6)*
	Defective IAT sensor.	*Replace. ☞(Page 1C-5)*
	Defective throttle valve motor.	*Replace. ☞(Page 1D-7)*

Condition	Possible cause	Correction / Reference Item
Engine idles poorly	Valve clearance out of adjustment.	*Adjust. ☞(Page 1D-22)*
	Poor seating of valves.	*Repair. ☞(Page 1D-52)*
	Defective valve guides.	*Replace. ☞(Page 1D-53)*
	Worn down camshafts and/or cam surfaces.	*Replace.* • *Removal: ☞(Page 1D-13)* • *Installation: ☞(Page 1D-15)*
	Too wide spark plug gap.	*Replace. ☞(Page 1H-6)*
	Defective ignition coil.	*Replace. ☞(Page 1H-6)*
	Defective CKP sensor.	*Replace.* • *Removal: ☞(Page 1J-5)* • *Installation: ☞(Page 1J-7)*
	Defective ECM.	*Replace. ☞(Page 1C-2)*
	Defective TP sensor.	*Replace. ☞(Page 1D-7)*
	Defective fuel pump.	*Replace. ☞(Page 1G-10)*
	Damaged or cracked vacuum hose.	*Replace.*
	Defective throttle valve motor.	*Replace. ☞(Page 1D-7)*
	Dirty throttle body.	*Clean. ☞(Page 1D-9)*
	Throttle valve system incorrect leaning.	*Reset learned value. ☞(Page 1C-3)*
Engine stalls often (Incorrect fuel/air mixture)	Defective IAP sensor or circuit.	*Repair or replace. ☞(Page 1C-4)*
	Clogged fuel filter.	*Replace. ☞(Page 1G-15)*
	Defective fuel pump.	*Replace. ☞(Page 1G-10)*
	Defective fuel pressure regulator.	*Replace. ☞(Page 1G-12)*
	Defective ECT sensor.	*Replace. ☞(Page 1F-12)*
	Defective thermostat.	*Replace. ☞(Page 1C-6)*
	Defective IAT sensor.	*Replace. ☞(Page 1D-7)*
	Damaged or cracked vacuum hose.	*Replace.*
	Defective throttle valve motor.	*Replace. ☞(Page 1D-7)*
Engine stalls often (Fuel injector improperly operating)	Defective fuel injector.	*Replace. ☞(Page 1G-16)*
	No injection signal from ECM.	*Repair or replace. ☞(Page 1A-48)*
	Open or short circuited wiring connections.	*Repair or replace. ☞(Page 9A-5)*
	Defective battery or low battery voltage.	*Replace or recharge. ☞(Page 1J-9)*
Engine stalls often (Control circuit or sensor improperly operating)	Defective ECM.	*Replace. ☞(Page 1C-2)*
	Defective fuel pressure regulator.	*Replace. ☞(Page 1G-12)*
	Defective TP sensor.	*Replace. ☞(Page 1D-7)*
	Defective IAT sensor.	*Replace. ☞(Page 1C-5)*
	Defective CKP sensor.	*Replace.* • *Removal: ☞(Page 1J-5)* • *Installation: ☞(Page 1J-7)*
	Defective ECT sensor.	*Replace. ☞(Page 1C-6)*
	Defective fuel pump relay.	*Replace. ☞(Page 9A-42)*
	Defective throttle valve motor.	*Replace. ☞(Page 1D-7)*
	Throttle valve system incorrect leaning.	*Reset learned value. ☞(Page 1C-3)*
Engine stalls often (Engine internal parts improperly operating)	Fouled spark plug.	*Replace. ☞(Page 1H-6)*
	Defective CKP sensor.	*Replace.* • *Removal: ☞(Page 1J-5)* • *Installation: ☞(Page 1J-7)*
	Defective ECM.	*Replace. ☞(Page 1C-2)*
	Clogged fuel hose.	*Clean or replace. ☞(Page 1G-5)*
	Valve clearance out of adjustment.	*Adjust. ☞(Page 1D-22)*
	Dirty throttle body.	*Clean. ☞(Page 1D-9)*

Condition	Possible cause	Correction / Reference Item
Noisy engine (Excessive valve chatter)	Too large valve clearance.	*Adjust. ☞(Page 1D-22)*
	Weakened or broken valve springs.	*Replace. ☞(Page 1D-48)*
	Worn tappets and/or cam surfaces.	*Replace.* • *Removal: ☞(Page 1D-13)* • *Installation: ☞(Page 1D-15)*
	Worn or burnt camshaft journals.	*Replace.* • *Removal: ☞(Page 1D-13)* • *Installation: ☞(Page 1D-15)*
Noisy engine (Noise seems to come from piston)	Worn down pistons or cylinders.	*Replace.* • *Piston: ☞(Page 1D-58)* • *Cylinder* – *Removal: ☞(Page 1D-32)* – *Installation: ☞(Page 1D-36)*
	Combustion chamber fouled with carbon.	*Clean. ☞(Page 1D-54)*
	Worn piston pins or piston pin bores.	*Replace. ☞(Page 1D-58)*
	Worn piston rings or ring grooves.	*Replace. ☞(Page 1D-58)*
Noisy engine (Noise seems to come from cam chain)	Stretched cam chain.	*Replace.* • *Removal: ☞(Page 1D-62)* • *Installation: ☞(Page 1D-66)*
	Worn sprockets.	*Replace.* • *Removal: ☞(Page 1D-62)* • *Installation: ☞(Page 1D-66)*
	Cam chain tension adjuster not working.	*Repair or replace.* • *Removal: ☞(Page 1D-32)* • *Installation: ☞(Page 1D-36)*
Noisy engine (Noise seems to come from crankshaft)	Rattling bearing due to wear.	*Replace.* • *Left crankcase: ☞(Page 1D-73)* • *Right Crankcase: ☞(Page 1D-74)*
	Worn or burnt big-end bearings.	*Replace. ☞(Page 1D-77)*
	Worn or burnt journal bearings.	*Replace. ☞(Page 1D-71)*
Noisy engine (Noise seems to come from water pump)	Too much play on pump shaft bearing.	*Replace. ☞(Page 1F-15)*
	Worn or damaged impeller shaft.	*Replace. ☞(Page 1F-15)*
	Worn or damaged mechanical seal.	*Replace. ☞(Page 1F-15)*
	Contact between pump case and impeller.	*Replace. ☞(Page 1F-15)*
Engine runs poorly in high speed range (Defective engine internal/ electrical parts)	Weakened valve springs.	*Replace. ☞(Page 1D-48)*
	Worn camshafts.	*Replace.* • *Removal: ☞(Page 1D-13)* • *Installation: ☞(Page 1D-15)*
	Valve clearance out of adjustment.	*Adjust. ☞(Page 1D-22)*
	Too narrow spark plug gaps.	*Replace. ☞(Page 1H-6)*
	Ignition not advanced sufficiently due to poorly working timing advance circuit.	*Replace ECM. ☞(Page 1C-2)*
	Defective ignition coils.	*Replace. ☞(Page 1H-6)*
	Defective CKP sensor.	*Replace.* • *Removal: ☞(Page 1J-5)* • *Installation: ☞(Page 1J-7)*
	Defective ECM.	*Replace. ☞(Page 1C-2)*
	Clogged air cleaner element.	*Replace. ☞(Page 1D-6)*
	Clogged fuel hose, resulting in inadequate fuel supply to injector.	*Clean and prime.*
	Defective fuel pump.	*Replace. ☞(Page 1G-10)*
	Defective TP sensor.	*Replace. ☞(Page 1D-7)*

Condition	Possible cause	Correction / Reference Item
Engine runs poorly in high speed range (Defective air flow system)	Clogged air cleaner element.	*Replace. ☞(Page 1D-6)*
	Sucking air from throttle body joint or intake pipe joint.	*Repair or replace.* • *Throttle body joint: ☞(Page 1D-7)* • *Intake pipe joint: ☞(Page 1D-10)*
	Defective ECM.	*Replace. ☞(Page 1C-2)*
	Defective throttle valve motor.	*Replace. ☞(Page 1D-7)*
Engine runs poorly in high speed range (Defective control circuit or sensor)	Low fuel pressure.	*Clean or replace.*
	Defective TP sensor.	*Replace. ☞(Page 1D-7)*
	Defective IAT sensor.	*Replace. ☞(Page 1C-5)*
	Defective IAP sensor.	*Replace. ☞(Page 1C-4)*
	Defective CKP sensor.	*Replace.* • *Removal: ☞(Page 1J-5)* • *Installation: ☞(Page 1J-7)*
	Defective ECM.	*Replace. ☞(Page 1C-2)*
	Defective accelerator position sensor.	*Replace. ☞(Page 1C-12)*
	Defective throttle valve motor.	*Replace. ☞(Page 1D-7)*
Engine lacks power (Defective engine internal/ electrical parts)	Weakened valve springs.	*Replace. ☞(Page 1D-48)*
	Valve clearance out of adjustment.	*Adjust. ☞(Page 1D-22)*
	Worn piston rings or cylinders.	*Replace.* • *Piston ring: ☞(Page 1D-58)* • *Cylinder* – *Removal: ☞(Page 1D-32)* – *Installation: ☞(Page 1D-36)*
	Poor seating of valves.	*Repair. ☞(Page 1D-52)*
	Fouled spark plugs.	*Replace. ☞(Page 1H-6)*
	Incorrect spark plugs.	*Replace. ☞(Page 1H-6)*
	Clogged fuel injector.	*Clean or replace. ☞(Page 1G-17)*
	Clogged air cleaner element.	*Replace. ☞(Page 1D-6)*
	Sucking air from throttle body joint or intake pipe joint.	*Repair or replace.* • *Throttle body joint: ☞(Page 1D-7)* • *Intake pipe joint: ☞(Page 1D-10)*
	Too much engine oil.	*Drain out excess oil.*
	Defective fuel pump.	*Replace. ☞(Page 1G-10)*
	Defective ECM.	*Replace. ☞(Page 1C-2)*
	Defective CKP sensor.	*Replace.* • *Removal: ☞(Page 1J-5)* • *Installation: ☞(Page 1J-7)*
	Defective ignition coils.	*Replace. ☞(Page 1H-6)*
	Defective accelerator position sensor.	*Replace. ☞(Page 1C-12)*
	Defective throttle valve motor.	*Replace. ☞(Page 1D-7)*
Engine lacks power (Defective control circuit or sensor)	Low fuel pressure.	*Repair or replace.* • *Fuel feed hose: ☞(Page 1G-5)* • *Fuel pump: ☞(Page 1G-10)*
	Defective TP sensor.	*Replace. ☞(Page 1D-7)*
	Defective IAT sensor.	*Replace. ☞(Page 1C-5)*
	Defective CKP sensor.	*Replace.* • *Removal: ☞(Page 1J-5)* • *Installation: ☞(Page 1J-7)*
	Defective IAP sensor.	*Replace. ☞(Page 1C-4)*
	Defective ECM.	*Replace. ☞(Page 1C-2)*
	Defective accelerator position sensor.	*Replace. ☞(Page 1C-12)*
	Defective throttle valve motor.	*Replace. ☞(Page 1D-7)*

Condition	Possible cause	Correction / Reference Item
Engine overheats (Defective engine internal parts)	Heavy carbon deposit on piston crown.	*Clean.*
	Not enough oil in the engine.	*Add oil. ☞(Page 1E-4)*
	Defective oil pump or clogged oil circuit.	*Replace or clean. ☞(Page 1E-10)*
	Use of incorrect engine oil.	*Replace. ☞(Page 1E-4)*
	Sucking air from throttle body joint or intake pipe joint.	*Repair or replace.* • *Throttle body joint: ☞(Page 1D-7)* • *Intake pipe joint: ☞(Page 1D-10)*
	Defective cooling system	• *Engine cooling system: ☞(Page 1F-6)* • *Engine oil cooling system: ☞(Page 1E-3)*
Engine overheats (Lean fuel/air mixture)	Short-circuited IAP sensor/lead wire.	*Repair or replace. ☞(Page 1C-4)*
	Short-circuited IAT sensor/lead wire.	*Repair or replace. ☞(Page 1C-5)*
	Sucking air from throttle body joint or intake pipe joint.	*Repair or replace.* • *Throttle body joint: ☞(Page 1D-7)* • *Intake pipe joint: ☞(Page 1D-10)*
	Defective fuel injector.	*Replace. ☞(Page 1G-16)*
	Defective ECT sensor.	*Replace. ☞(Page 1C-6)*
Engine overheats (Other factors)	Ignition timing is too advanced due to defective timing advance system (ECT sensor, CKP sensor or ECM).	*Replace.*
Dirty or heavy exhaust smoke	Too much engine oil.	*Drain out excess oil.*
	Worn piston rings or cylinders.	*Replace.* • *Piston ring: ☞(Page 1D-58)* • *Cylinder* – *Removal: ☞(Page 1D-32)* – *Installation: ☞(Page 1D-36)*
	Worn valve guides.	*Replace. ☞(Page 1D-54)*
	Scored or scuffed cylinder walls.	*Replace.* • *Removal: ☞(Page 1D-32)* • *Installation: ☞(Page 1D-36)*
	Worn valve stems.	*Replace. ☞(Page 1D-48)*
	Defective valve stem oil seal.	*Replace. ☞(Page 1D-48)*
	Worn oil ring side rails.	*Replace. ☞(Page 1D-58)*

MIL Inspection

BENL06L21104009

Wiring Diagram

Refer to "Engine Control System Wiring Diagram" (Page 1A-6).

Troubleshooting

Step 1

1) Check if the MIL (1) lights up when turning the ignition switch ON.

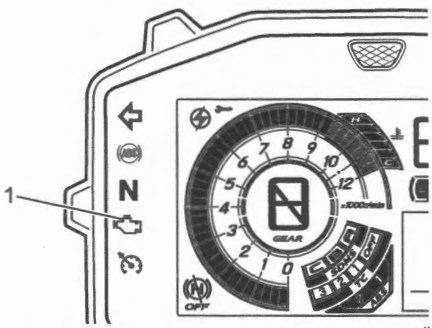

IL06L1110156-01

Does the MIL light up?

Yes — Go to Step 3.

No — Go to Step 2.

Step 2

(The MIL dose not lights up)

1) Check the other indicator light. ☞(Page 9C-10)

Is check result OK?

Yes — Replace the combination meter. ☞(Page 9C-16)

No — Check the combination meter power supply and ground circuit.

If combination meter power supply and ground circuit is good condition, replace the combination meter. ☞(Page 9C-16)

Step 3

(The MIL lights up)

1) Check if the MIL go off about 3 seconds later of ignition switch ON.

Does the MIL go off?

Yes — Go to Step 4.

No —
- DTC output. ☞(Page 1A-11)
- If DTC can not be output, check the combination meter. ☞(Page 9C-10)

If combination meter is good condition, replace the ECM and inspect it again. ☞(Page 1C-2)

Step 4

Is "– – –" or "CHEC" displayed to LCD?

Yes — Perform the "CAN Communication Check" in Section 10H (Page 10H-4).

No — Normal. (No DTC exists)

Master Warning Indicator Light Inspection

BENL06L21104010

Wiring Diagram

Refer to "Engine Control System Wiring Diagram" (Page 1A-6).

Troubleshooting

Step 1

1) Check if the master warning indicator light (1) lights up when turning the ignition switch ON.

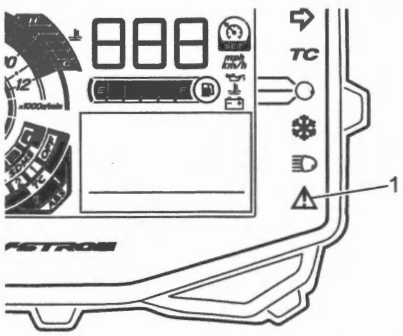

IL06L1110162-01

Does the master warning indicator light light up?

Yes — Go to Step 3.

No — Go to Step 2.

Step 2

(The master warning indicator light dose not lights up)

1) Check the other indicator light. ☞(Page 9C-10)

Is check result OK?

Yes — Replace the combination meter. ☞(Page 9C-16)

No — Check the combination meter power supply and ground circuit.

If combination meter power supply and ground circuit is good condition, replace the combination meter. ☞(Page 9C-16)

Step 3

(The master warning indicator light lights up)

1) Check if the master warning indicator light go off about 3 seconds later of ignition switch ON.

Does the master warning indicator light go off?

Yes — Normal.

No — Go to Step 4.

Step 4

Is "Air!" or "SW!" displayed to LCD?

Yes — Go to troubleshooting for "Multifunction Display indicates "Air!"" in Section 9C (Page 9C-5) or "Multifunction Display indicates "SW!"" in Section 9C (Page 9C-6).

No —

- DTC output.
  - ECM: ☞(Page 1A-11)
  - ABS control unit / HU (with motion track brake system): ☞(Page 4E-14)
- If DTC can not be output, check the combination meter. ☞(Page 9C-10)

  If combination meter is good condition, replace the ECM or ABS control unit / HU (with motion track brake system) and inspect it again.
  - ECM: ☞(Page 1C-2)
  - ABS control unit / HU (with motion track brake system): ☞(Page 4E-54)

DTC P0030 (C44)

BENL06L21104011

DTC Detecting Condition and Trouble Area

DTC detecting condition	Trouble area
P0030 (C44): O2 Sensor Heater Control Circuit Bank 1 Sensor 1 HO2 sensor heater circuit is shorted to ground or open. (3 D/C detection logic)	• HO2 sensor heater • HO2 sensor heater circuit • ECM

Wiring Diagram

Refer to "Engine Control System Wiring Diagram" (Page 1A-6).

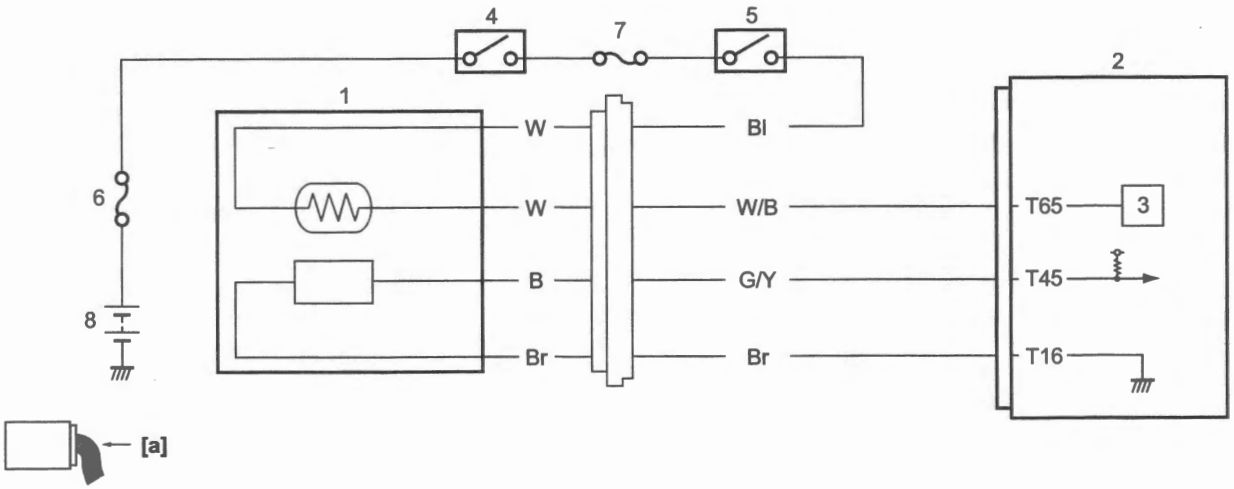

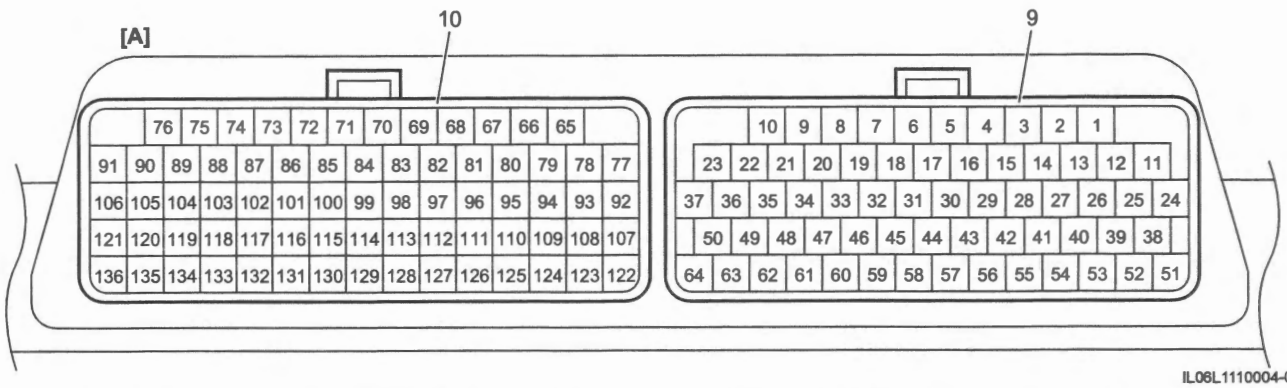

IL06L1110004-08

[A]: ECM coupler "T" (View [a])	4. Ignition switch	8. Battery
1. ECM	5. Engine stop / starter switch ("RUN / STOP" position)	9. Coupler "A"
2. HO2 sensor	6. Main fuse (30 A)	10. Coupler "B"
3. HO2 sensor heater drive circuit	7. Ignition fuse (10 A)	

Troubleshooting

Step 1

HO2 sensor heater power supply circuit check

1) Turn the ignition switch OFF.
2) Disconnect the HO2 sensor coupler. ☞(Page 1C-8)
3) Check for proper terminal connection to the HO2 sensor coupler (1).
4) If connections are OK, turn the ignition switch ON.
5) Measure the voltage between "T4" and ground.

HO2 sensor heater power supply voltage
[Standard]: Battery voltage

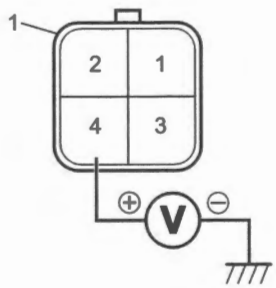

IL41K1110009-01

Is check result OK?

Yes — Go to Step 2.

No — Repair or replace the "T4" wire at the HO2 sensor coupler.

Step 2

HO2 sensor heater circuit check

1) Turn the ignition switch OFF.
2) Disconnect the ECM coupler "B". ☞(Page 1C-2)
3) Check for proper terminal connection to the ECM coupler "B".
4) If connections are OK, check the following points.
   - Resistance
     - Between "T3" at the HO2 sensor coupler and "T65" at the ECM coupler "B": less than 1 Ω

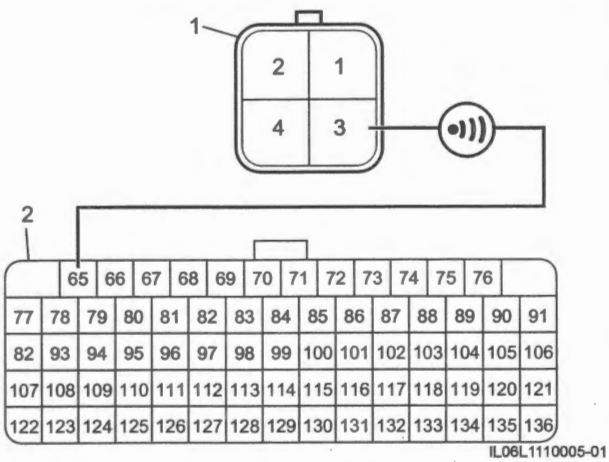

IL06L1110005-01

   - Between "T3" at the HO2 sensor coupler (1) and ground: infinity

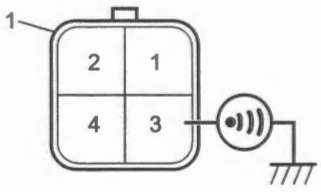

IL41K1110011-01

   - Between "T3" and other terminal at HO2 sensor coupler (1): infinity

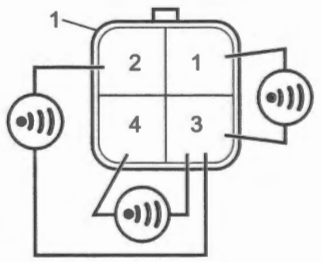

IL41K1110012-01

   - Voltage
     - Turn the ignition switch ON.
     - Between "T3" at the HO2 sensor coupler (1) and ground: approx. 0 V

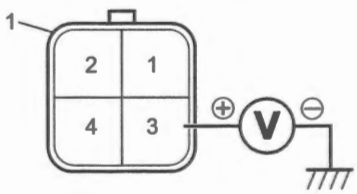

IL41K1110013-01

Is check result OK?

Yes — Go to Step 3.

No — Repair or replace the "T3" wire at the HO2 sensor coupler.

Step 3

HO2 sensor heater check

1) Measure the HO2 sensor heater resistance. Refer to "HO2 Sensor Heater Resistance" under "HO2 Sensor Inspection" in Section 1C (Page 1C-7).

Is check result OK?

Yes — Replace the ECM and inspect it again. ☞(Page 1C-2)

No — Replace the HO2 sensor. ☞(Page 1C-8)

DTC P0105 / P0106 / P0107 (C13)

BENL06L21104012

DTC Detecting Condition and Trouble Area

DTC detecting condition	Trouble area
P0105 (C13): IAP Sensor Circuit IAP sensor #1 output voltage is higher than 4.90 V. (3 D/C detection logic)	• Vacuum passage between throttle body and IAP sensor #1 • IAP sensor #1 • IAP sensor #1 circuit • ECM
P0106 (C13): IAP Sensor Circuit Range / Performance Any of the following conditions is met. • IAP sensor #1 vacuum hose has come off. • Measured IAP sensor #1 output voltage is out of the specified range. (3 D/C detection logic)	
P0107 (C13): IAP Sensor Circuit IAP sensor #1 output voltage is lower than 0.10 V. (3 D/C detection logic)	

Wiring Diagram

Refer to "Engine Control System Wiring Diagram" (Page 1A-6).

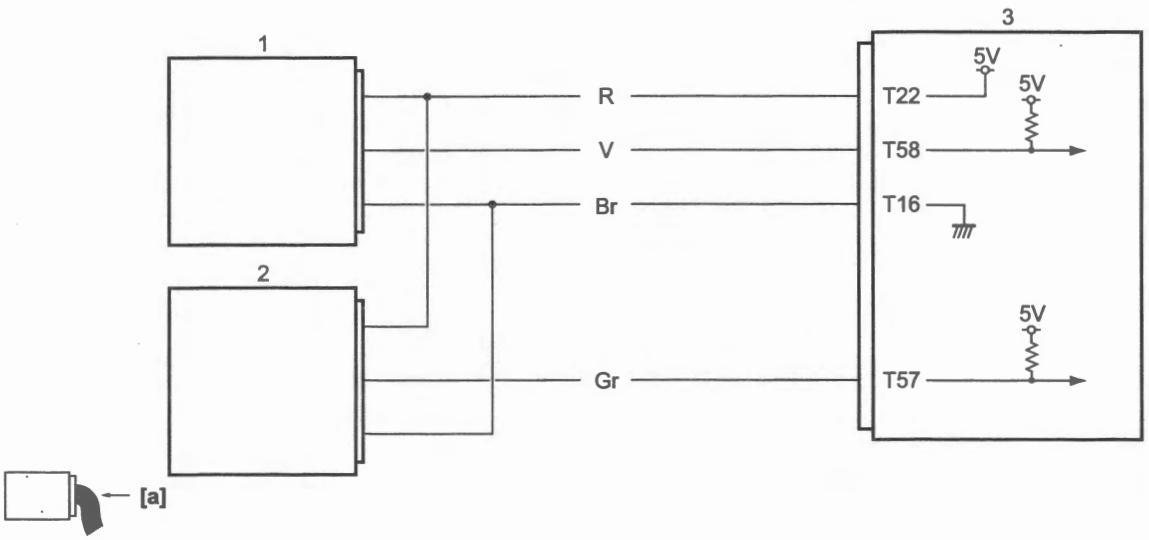

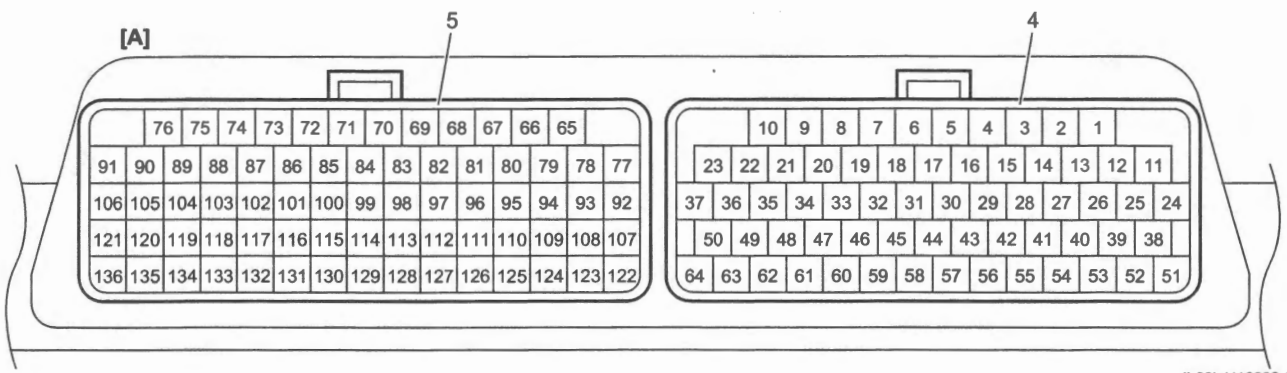

IL06L1110006-03

[A]: ECM coupler "T" (View [a])	2. IAP sensor #2	4. Coupler "A"
1. IAP sensor #1	3. ECM	5. Coupler "B"

Troubleshooting

NOTE

When DTC P0106 (C13) is not detected, start with Step 2.

Step 1

IAP sensor vacuum hose check

- Check that the IAP sensor vacuum hose is connected correctly. ☞(Page 1D-3)
- Check the IAP sensor vacuum hose for wear and damage.

Is check result OK?

Yes — Go to Step 2.

No — Repair or replace the IAP sensor vacuum hose.

Step 2

IAP sensor #1 power supply circuit check

1) Turn the ignition switch OFF.
2) Disconnect the IAP sensor #1 coupler. ☞(Page 1C-4)
3) Check for proper terminal connection to the IAP sensor #1 coupler (1).
4) If connections are OK, turn the ignition switch ON.
5) Measure the voltage between the "T2" and "T1".

IAP sensor #1 power supply voltage
[Standard]: 4.5 – 5.5 V

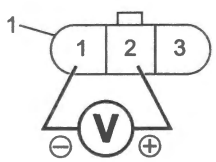

IL06L1110007-03

Is check result OK?

Yes — Go to Step 3.

No — Go to Step 2.

Step 3

IAP sensor #1 ground circuit check

1) Measure the voltage between the "T2" at the IAP sensor #1 coupler (1) and ground.

IAP sensor #1 power supply voltage
[Standard]: 4.5 – 5.5 V

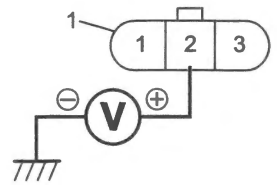

IL06L1110008-03

Is check result OK?

Yes — Repair or replace the "T1" wire at the IAP sensor #1 coupler.

No — Repair or replace the "T2" wire at the IAP sensor #1 coupler.

Step 4

IAP sensor #1 signal circuit check

1) Turn the ignition switch OFF.
2) Disconnect the ECM coupler "A". ☞(Page 1C-2)
3) Check for proper terminal connection to the ECM coupler "A".
4) If connections are OK, check the following points.
   - Resistance
     – Between "T3" at the IAP sensor #1 coupler (1) and "T58" at the ECM coupler "A" (2): less than 1 Ω

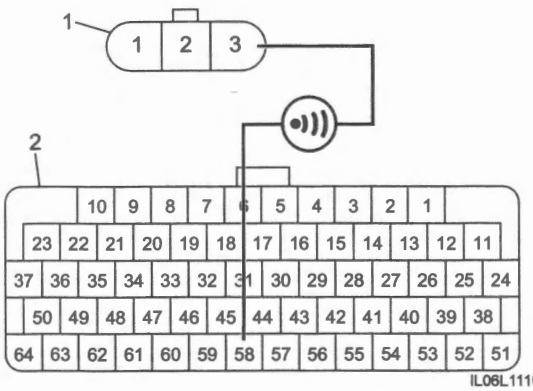

IL06L1110009-01

     – Between "T3" at the IAP sensor #1 coupler (1) and ground: infinity
     – Between "T3" and other terminal at IAP/ sensor #1 coupler (1): infinity

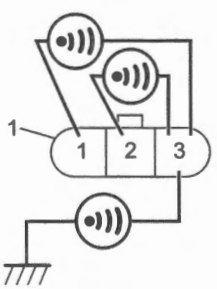

IL06L1110010-02

   - Voltage
     – Turn the ignition switch ON.
     – Between "T3" at the IAP sensor #1coupler (1) and ground: approx. 0 V

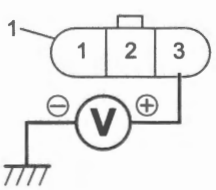

IL06L1110012-02

Is check result OK?

Yes — Go to Step 4.

No — Repair or replace the "T3" wire at the IAP sensor #1 coupler.

Step 5

IAP sensor #1 output voltage check

1) Turn the ignition switch OFF.
2) Measure the IAP sensor output voltage. Refer to "IAP Sensor Output Voltage" under ☞(Page 1C-3)

Is check result OK?

Yes — Replace the ECM and inspect it again. ☞(Page 1C-2)

No — Replace the IAP sensor #1. ☞(Page 1C-4)

DTC P0110 / P0111 / P0112 (C21)

BENL06L21104013

DTC Detecting Condition and Trouble Area

DTC detecting condition	Trouble area
P0110 (C21): IAT Sensor 1 Circuit The sensor output voltage is higher than 4.65 V. (3 D/C detection logic)	• IAT sensor • IAT sensor circuit • ECM
P0111 (C21): Intake Air Temperature Circuit Response Malfunction Any of the following conditions is met. • IAT sensor output voltage is out of the specified range. • IAT sensor output voltage does not change, under the specified condition. (3 D/C detection logic)	
P0112 (C21): IAT Sensor 1 Circuit The sensor output voltage is lower than 0.10 V. (3 D/C detection logic)	

Wiring Diagram

Refer to "Engine Control System Wiring Diagram" (Page 1A-6).

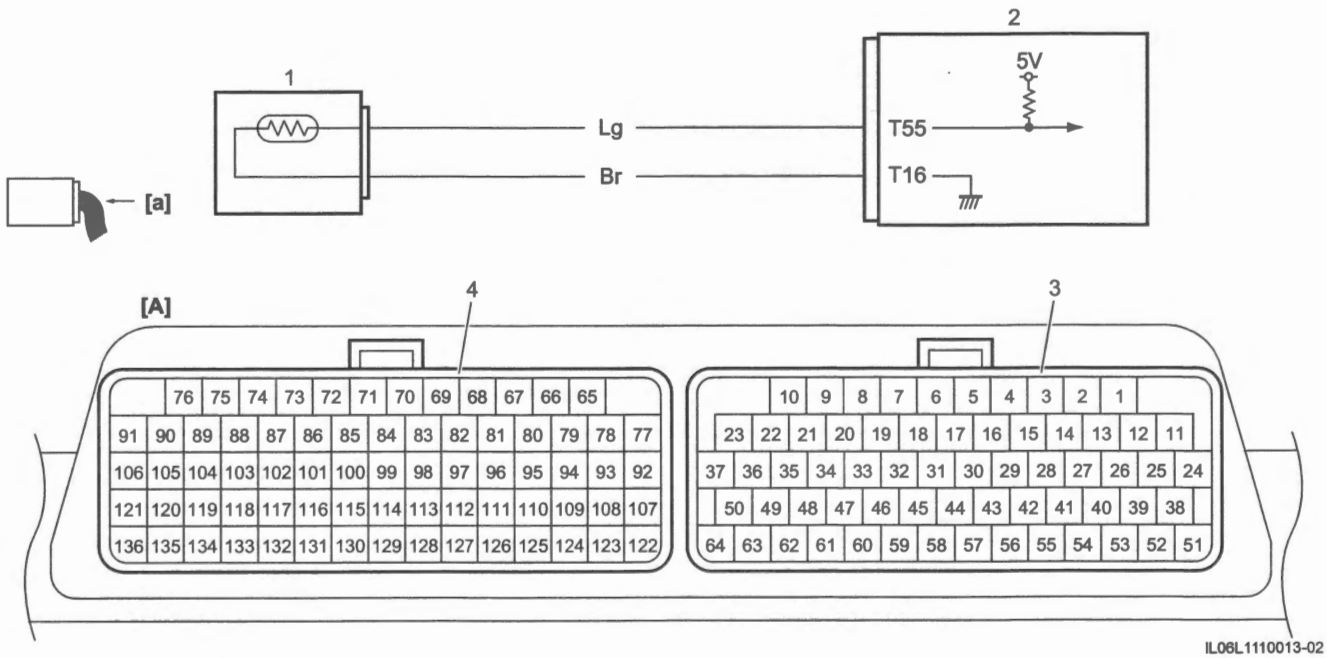

IL06L1110013-02

[A]: ECM coupler "T" (View [a])	2. ECM	4. Coupler "B"
1. IAT sensor	3. Coupler "A"	

Troubleshooting

Step 1

IAT sensor power supply circuit check

1) Turn the ignition switch OFF.
2) Disconnect the IAT sensor coupler (1). ☞(Page 1C-5)
3) Check for proper terminal connection to the IAT sensor coupler (1).
4) If connections are OK, turn the ignition switch ON.
5) Measure the voltage between the "T1" and ground.
6) If OK, measure the voltage between the "T1" and "T2".

IAT sensor power supply voltage
[Standard]: 4.5 – 5.5 V

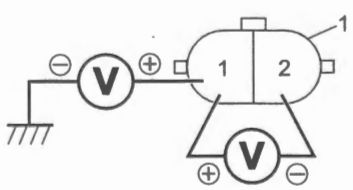

IL06L1110014-01

Is check result OK?

Yes Go to Step 3.

No Go to Step 2.

Step 2

IAT sensor signal circuit check

1) Turn the ignition switch OFF.
2) Disconnect the ECM coupler "A". ☞(Page 1C-2)
3) Check for proper terminal connection to the ECM coupler "A".
4) If connections are OK, check the following points.
   - Resistance
     - Between "T1" at the IAT sensor coupler (1) and "T55" at the ECM coupler "A" (2): less than 1 Ω
     - Between "T2" at the IAT sensor coupler and "T16" at the ECM coupler "A": less than 1 Ω

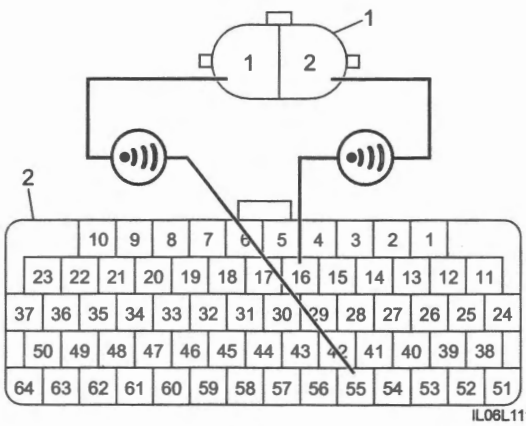

IL06L1110015-01

   - Between "T1" at the IAT sensor coupler (1) and ground: infinity
   - Between "T2" at the IAT sensor coupler and ground: infinity
   - Between "T1" and "T2" at IAT sensor coupler: infinity

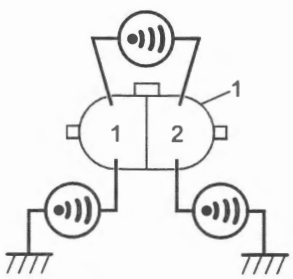

IL06L1110017-01

   - Voltage
     - Turn the ignition switch ON.
     - Between "T1" at the IAT sensor coupler (1) and ground: approx. 0 V
     - Between "T2" at the IAT sensor coupler and ground: approx. 0 V

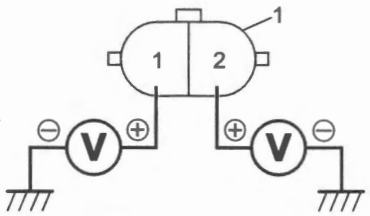

IL06L1110018-01

Is check result OK?

Yes Replace the ECM and inspect it again. ☞(Page 1C-2)

No Repair or replace the defective wire harness.

Step 3

IAT sensor resistance check

1) Turn the ignition switch OFF.
2) Measure the IAT sensor resistance. ☞(Page 1C-5)

Is check result OK?

Yes Replace the ECM and inspect it again. ☞(Page 1C-2)

No Replace the IAT sensor. ☞(Page 1C-5)

DTC P0115 / P0116 / P0117 (C15)

BENL06L21104014

DTC Detecting Condition and Trouble Area

DTC detecting condition	Trouble area
P0115 (C15): ECT Sensor Circuit ECT sensor output voltage is higher than 4.80 V. (3 D/C detection logic)	• ECT sensor • ECT sensor circuit • ECM
P0116 (C15): Engine Coolant / Oil Temperature Circuit Response Malfunction Any of the following conditions is met. • ECT sensor output voltage is out of the specified range. • ECT sensor output voltage does not change, under the specified condition. (3 D/C detection logic)	
P0117 (C15): ECT Sensor Circuit ECT sensor output voltage is lower than 0.10 V. (3 D/C detection logic)	

Wiring Diagram

Refer to "Engine Control System Wiring Diagram" (Page 1A-6).

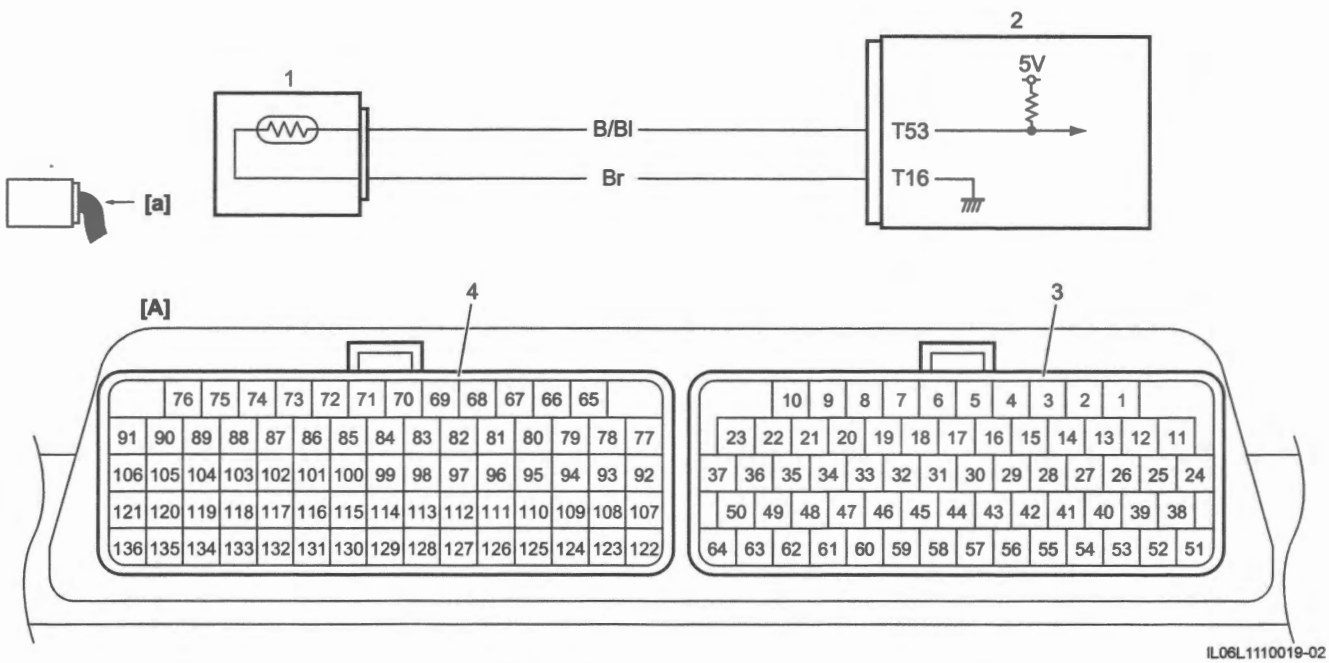

IL06L1110019-02

[A]: ECM coupler "T" (View [a])	2. ECM	4. Coupler "B"
1. ECT sensor	3. Coupler "A"	

Troubleshooting

Step 1

ET sensor power supply voltage check

1) Turn the ignition switch OFF.
2) Disconnect the ECT sensor coupler. ☞(Page 1C-6)
3) Check for proper terminal connection to the ECT sensor coupler (1).
4) If connections are OK, turn the ignition switch ON.
5) Measure the voltage between the "T2" and ground.
6) If OK, measure the voltage between the "T2" and "T1"wire.

ECT sensor power supply voltage
[Standard]: 4.5 – 5.5 V

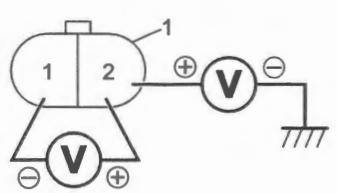

IL06L1110020-01

Is check result OK?

Yes Go to Step 3.

No Go to Step 2.

Step 2

ET sensor signal circuit and ground circuit check

1) Turn the ignition switch OFF.
2) Disconnect the ECM coupler "A". ☞(Page 1C-2)
3) Check for proper terminal connection to the ECM coupler "A".
4) If connections are OK, check the following points.
   - Resistance
     - Between "T2" at the ECT sensor coupler (1) and "T53" at the ECM coupler "A" (2): less than 1 Ω
     - Between "T1" at the ECT sensor coupler and "T16" at the ECM coupler "A": less than 1 Ω

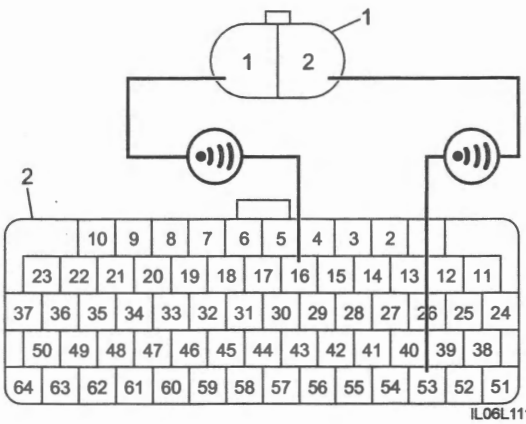

IL06L1110021-01

     - Between "T2" at the ECT sensor coupler (1) and ground: infinity
     - Between "T1" at the ECT sensor coupler and ground: infinity
     - Between "T2" and "T1" at the ECT sensor coupler (1): infinity

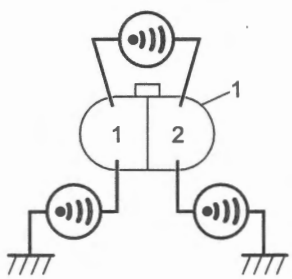

IL06L1110022-01

   - Voltage
     - Turn the ignition switch ON.
     - Between "T2" at the ECT sensor coupler (1) and ground: approx. 0 V
     - Between "T1" at the ECT sensor coupler and ground: approx. 0 V

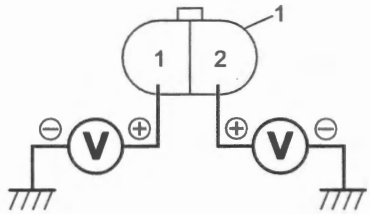

IL06L1110023-01

Is check result OK?

Yes Replace the ECM and inspect it again. ☞(Page 1C-2)

No Repair or replace the defective wire harness.

Step 3

ECT sensor resistance check

1) Turn the ignition switch OFF.
2) Measure the ECT sensor resistance. ☞(Page 1C-6)

Is check result OK?

Yes Replace the ECM and inspect it again. ☞(Page 1C-2)

No Replace the ECT sensor. ☞(Page 1C-6)

DTC P0120 / P0123 (C29)

BENL06L21104015

DTC Detecting Condition and Trouble Area

DTC detecting condition	Trouble area
P0120 (C29): TP Sensor / Switch "A" Circuit TP sensor #1 (main) output voltage is lower than 0.10 V. (1 D/C detection logic)	• TP sensor #1 (main) • TP sensor #1 (main) circuit • ECM
P0123 (C29): TP Sensor / Switch "A" Circuit High TP sensor #1 (main) output voltage is higher than 4.30 V. (1 D/C detection logic)	

Wiring Diagram

Refer to "Engine Control System Wiring Diagram" (Page 1A-6).

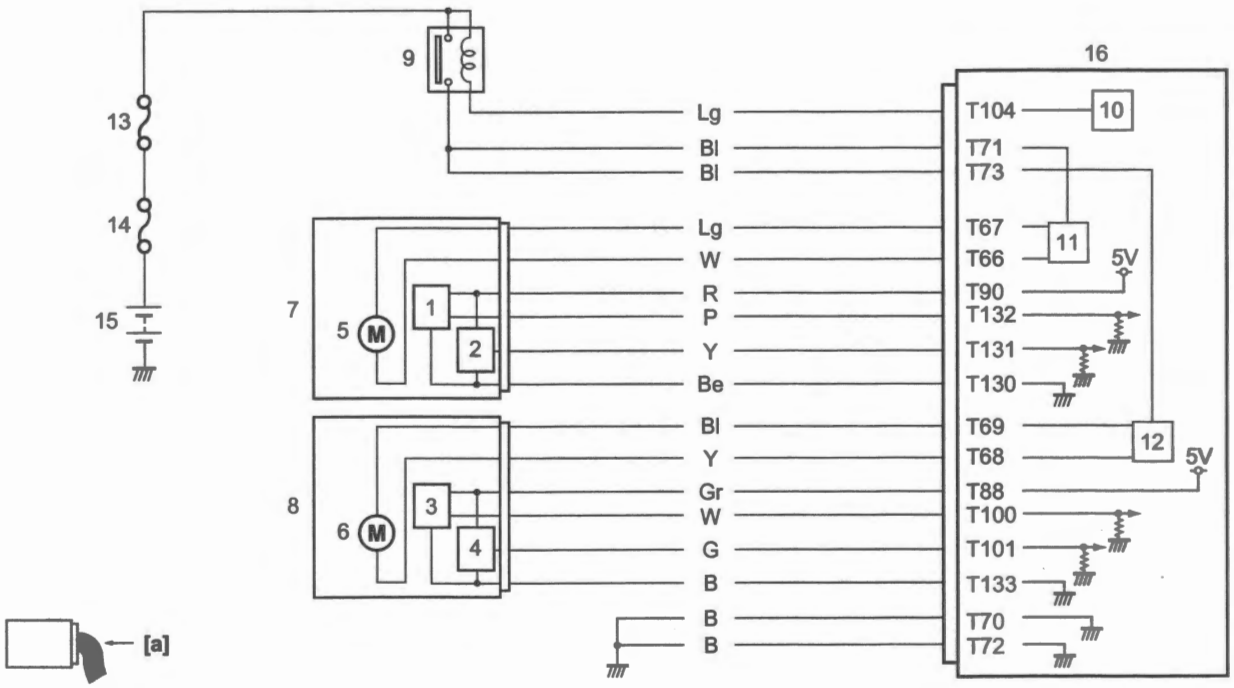

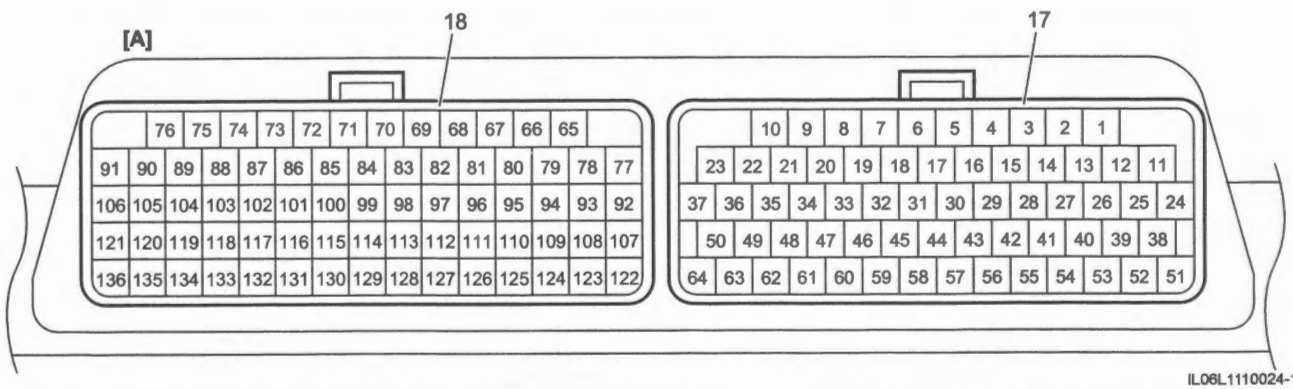

IL06L1110024-10

[A]: ECM coupler "T" (View [a])	7. Throttle body #1	14. Main fuse (30 A)
1. TP sensor #1 (main)	8. Throttle body #2	15. Battery
2. TP sensor #1 (sub)	9. Throttle valve motor relay	16. ECM
3. TP sensor #2 (main)	10. Throttle valve motor relay drive circuit	17. Coupler "A"
4. TP sensor #2 (sub)	11. Throttle valve motor #1 drive circuit	18. Coupler "B"
5. Throttle valve motor #1	12. Throttle valve motor #2 drive circuit	
6. Throttle valve motor #2	13. Fuel fuse (10 A)	

Troubleshooting

Step 1

TP sensor #1 power supply circuit check

1) Turn the ignition switch OFF.
2) Disconnect the throttle body #1 coupler (1). ☞(Page 1D-7)
3) Check for proper terminal connection to the throttle body #1 coupler (1).
4) If connections are OK, turn the ignition switch ON.
5) Measure the voltage between the "T2" and "T4".

TP sensor power supply voltage
[Standard]: 4.5 – 5.5 V

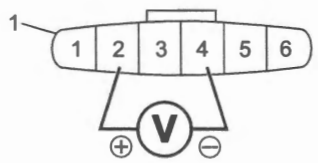

IL06L1110025-05

Is check result OK?

Yes Go to Step 3.

No Go to Step 2.

Step 2

TP sensor #1 ground circuit check

1) Measure the voltage between the "T2" at the throttle body #1 coupler (1) and ground.

TP sensor power supply voltage
[Standard]: 4.5 – 5.5 V

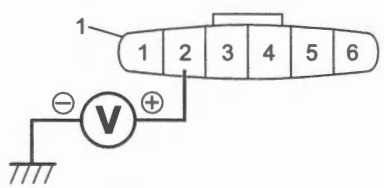

IL06L1110026-05

Is check result OK?

Yes Repair or replace the "T4" wire at the throttle body #1 coupler.

No Repair or replace the "T2" wire at the throttle body #1 coupler.

Step 3

TP sensor #1 (main) signal circuit check

1) Turn the ignition switch OFF.
2) Disconnect the ECM coupler "B". ☞(Page 1C-2)
3) Check for proper terminal connection to the ECM coupler "B".
4) If connections are OK, check the following points.
   - Resistance
     - Between "T3" at the throttle body #1 coupler (1) and "T132" at the ECM coupler "B" (2): less than 1 Ω

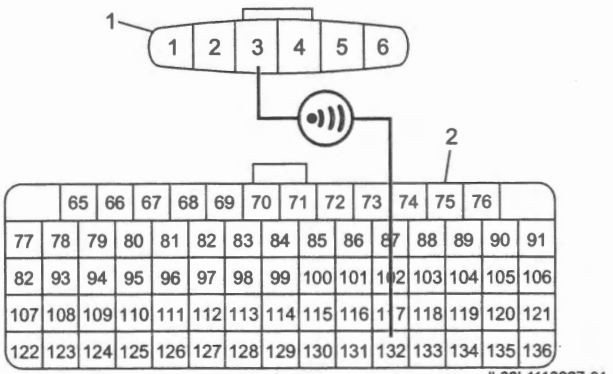

IL06L1110027-01

     - Between "T3" at the throttle body #1 coupler (1) and ground: infinity

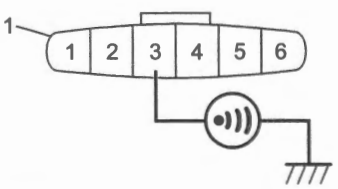

IL06L1110028-02

     - Between "T3" and other terminal at the throttle body #1 coupler (1): infinity

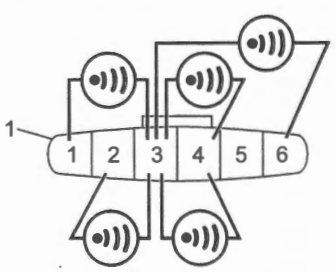

IL06L1110029-02

   - Voltage
     - Turn the ignition switch ON.
     - Between "T3" at the throttle body #1 coupler (1) and ground: approx. 0 V

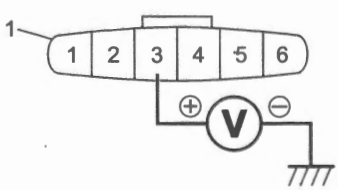

IL06L1110030-02

Is check result OK?

Yes — Go to Step 4.

No — Repair or replace the "T3" wire at the throttle body #1 coupler.

Step 4

TP sensor #1 (main) output voltage check

1) Measure the TP sensor #1 (main) output voltage. ☞(Page 1C-7)

Is check result OK?

Yes — Replace the ECM and inspect it again. ☞(Page 1C-2)

No — Replace the throttle body #1. ☞(Page 1D-7)

DTC P0130 / P0132 / P0133 (C44)

BENL06L21104016

DTC Detecting Condition and Trouble Area

DTC detecting condition	Trouble area
P0130 (C44): O2 Sensor Circuit Bank 1 Sensor 1 HO2 sensor is not activated. (3 D/C detection logic)	• HO2 sensor • HO2 sensor circuit • ECM
P0132 (C44): O2 Sensor Circuit High Voltage Bank 1 Sensor 1 HO2 sensor output voltage is higher than 4.90 V. (3 D/C detection logic)	
P0133 (C44): O2 Sensor Circuit Slow Response (Bank1 Sensor1) Shifting time between rich and lean of HO2 sensor is longer than specified time. (3 D/C detection logic)	

Wiring Diagram

Refer to "Engine Control System Wiring Diagram" (Page 1A-6).

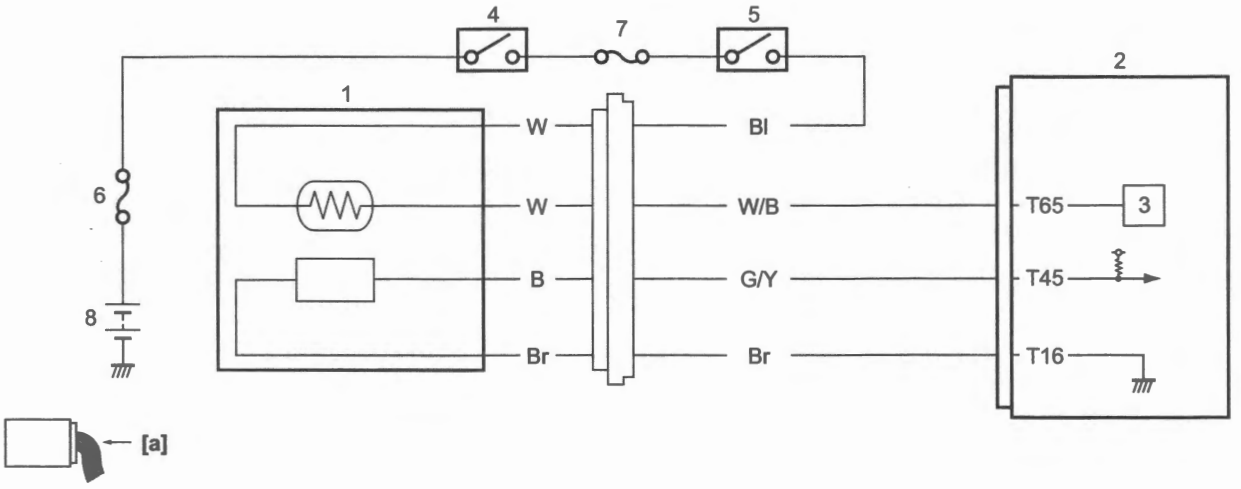

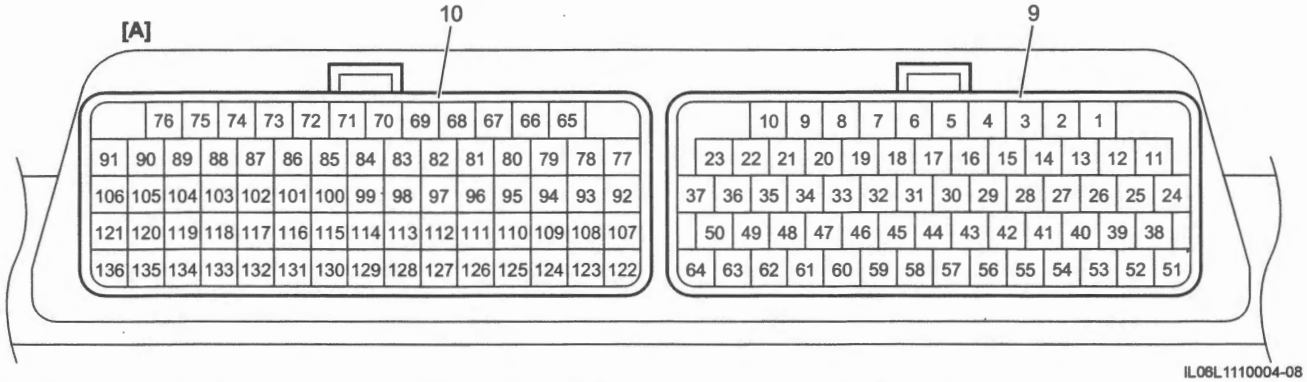

IL08L1110004-08

[A]: ECM coupler "T" (View [a])	4. Ignition switch	8. Battery
1. ECM	5. Engine stop / starter switch ("RUN / STOP" position)	9. Coupler "A"
2. HO2 sensor	6. Main fuse (30 A)	10. Coupler "B"
3. HO2 sensor heater drive circuit	7. Ignition fuse (10 A)	

Troubleshooting

Step 1

HO2 sensor signal circuit check

1) Turn the ignition switch OFF.
2) Disconnect the HO2 sensor coupler and ECM coupler.
   - HO2 sensor: ☞(Page 1C-8)
   - ECM: ☞(Page 1C-2)
3) Check for proper terminal connection to the HO2 sensor coupler and ECM coupler "A".
4) If connections are OK, check the following points.
   - Resistance
     - Between "T1" at the HO2 sensor coupler (1) and "T45" at the ECM coupler "A" (2): less than 1 Ω
     - Between "T2" at the HO2 sensor coupler and "T16" at the ECM coupler "A": less than 1 Ω

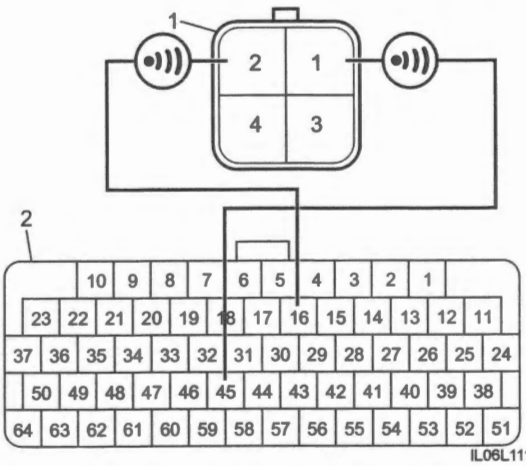

IL06L1110031-01

- Between each of "T1" and "T2" at the HO2 sensor coupler (1) and ground: infinity

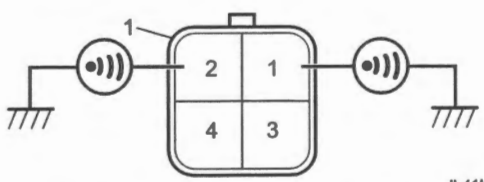

IL41K1110020-01

- Between "T1" and other terminal at HO2 sensor coupler (1): infinity

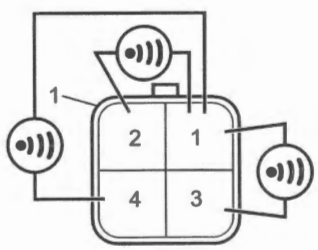

IL41K1110021-01

- Between "T2" and other terminal at HO2 sensor coupler (1): infinity

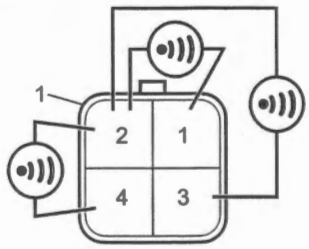

IL41K1110022-01

- Voltage
  - Turn the ignition switch ON.
  - Between each of "T1" and "T2" at the HO2 sensor coupler (1) and ground: approx. 0 V

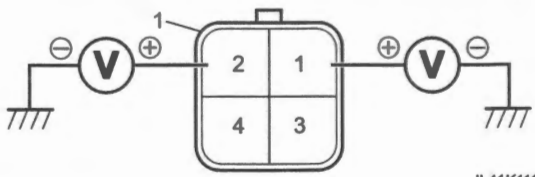

IL41K1110023-01

Is check result OK?

Yes	Go to Step 2.
No	Repair or replace the defective wire harness.

Step 2

HO2 sensor output voltage check

1) Turn the ignition switch OFF.
2) Connect the ECM coupler "A" and HO2 sensor coupler.
3) Warm up the engine enough.
4) Measure the HO2 sensor output voltage. Refer to "HO2 Sensor Output Voltage" under "HO2 Sensor Inspection" in Section 1C (Page 1C-7).

Is check result OK?

Yes	Replace the ECM and inspect it again. ☞(Page 1C-2)
No	Replace the HO2 sensor. ☞(Page 1C-8)

DTC P0171 / P0172 (C45)

BENL06L21104017

DTC Detecting Condition and Trouble Area

DTC detecting condition	Trouble area
P0171 (C45): System Too Lean Bank 1 Fuel trim correction is higher than specified value for specified time under the specified condition. (3 D/C detection logic)	• Fuel system • Air intake system • Exhaust system • Emission control system • HO2 sensor • HO2 sensor circuit • ECM
P0172 (C45): System Too Rich Bank 1 Fuel trim correction is lower than specified value for specified time under the specified condition. (3 D/C detection logic)	

Wiring Diagram

Refer to "Engine Control System Wiring Diagram" (Page 1A-6).

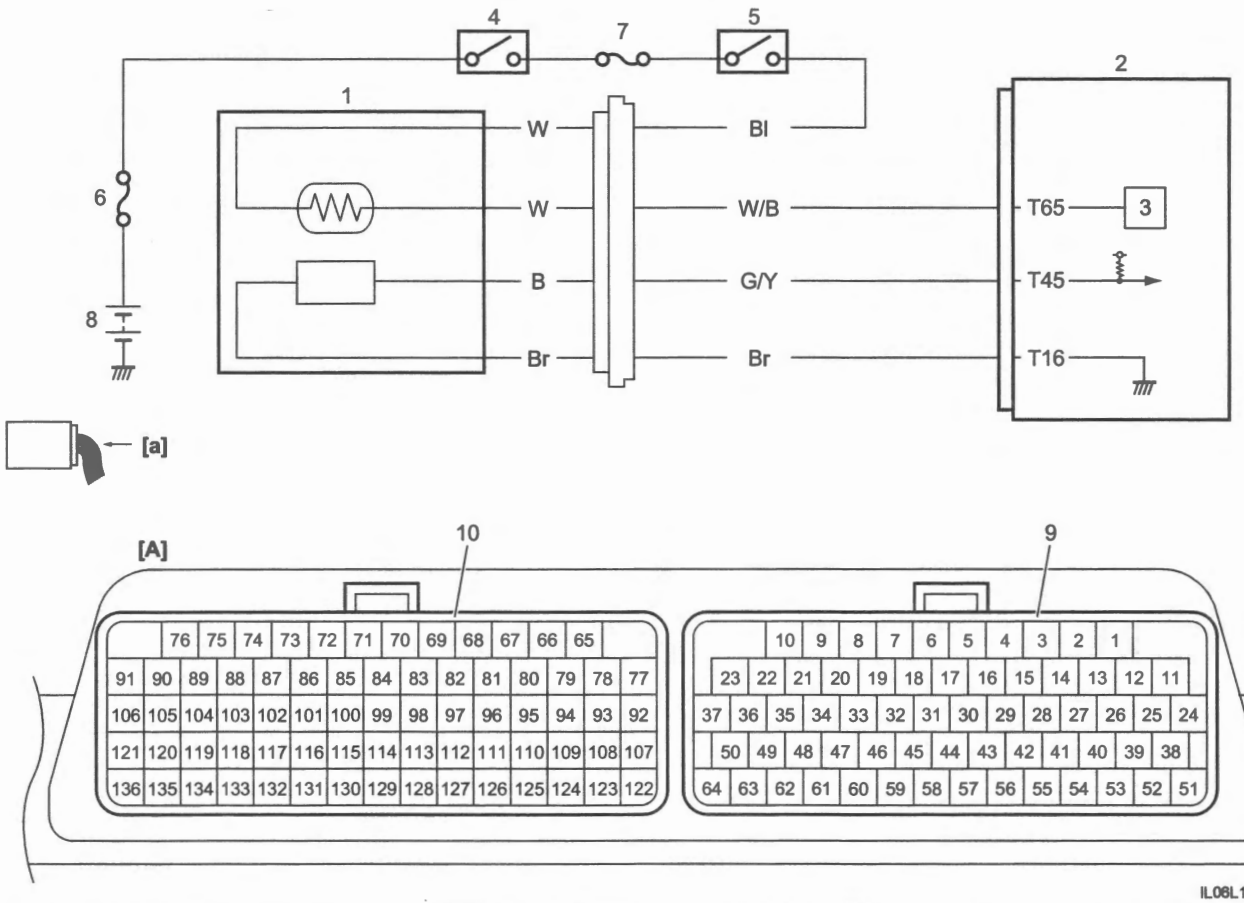

IL06L1110004-08

[A]: ECM coupler "T" (View [a])	4. Ignition switch	8. Battery
1. ECM	5. Engine stop / starter switch ("RUN / STOP" position)	9. Coupler "A"
2. HO2 sensor	6. Main fuse (30 A)	10. Coupler "B"
3. HO2 sensor heater drive circuit	7. Ignition fuse (10 A)	

Troubleshooting

Step 1

DTC check

Is there any DTC(s) other than P0171 (C45) and P0172 (C45)?

Yes Go to troubleshooting for applicable DTC.

No Go to Step 2.

Step 2

Fuel system and emission control system check

1) Check the following points related to fuel and emission control systems.
   - Fuel pressure: ☞(Page 1G-3)
   - Fuel injector circuit: Refer to "DTC P0201 (C32)" (Page 1A-48) and "DTC P0202 (C33)" (Page 1A-50).
   - Fuel injector: ☞(Page 1G-17)
   - IAP sensor: ☞(Page 1C-3)
   - PCV hose: ☞(Page 1B-5)
   - PAIR system: ☞(Page 1B-5)

Is check result OK?

Yes Go to Step 3.

No Repair or replace defective parts.

Step 3

Exhaust system and air intake system check

1) Turn the ignition switch OFF.
   - Exhaust system: ☞(Page 1K-7)
   - Check air intake system for clogging and leakage.

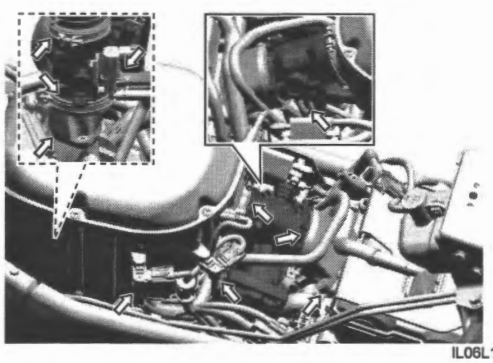

IL06L1110153-03

Is check result OK?

Yes Go to Step 4.

No Repair or replace defective parts.

Step 4

HO2 sensor circuit signal check

1) Check HO2 sensor signal circuit. Refer to "Step 1" under "DTC P0130 / P0132 / P0133 (C44)" (Page 1A-44).

Is check result OK?

Yes Go to Step 5.

No Repair or replace the defective wire harness.

Step 5

DTC recheck

1) Replace the HO2 sensor. ☞(Page 1C-8)
2) Perform "DTC Check" (Page 1A-11) and recheck DTC.

Is DTC P0171 (C45) and/or P0172 (C45) still detected?

Yes Replace the ECM and inspect it again. ☞(Page 1C-2)

No End.

DTC P0201 (C32)

BENL06L21104018

DTC Detecting Condition and Trouble Area

DTC detecting condition	Trouble area
P0201 (C32): Injector Circuit / Open – Cylinder 1 Fuel injector #1 signal is interrupted by 8 times or more continuity although CKP signal is detected. (1 D/C detection logic)	• Fuel injector #1 • Fuel injector #1 circuit • ECM

Wiring Diagram

Refer to "Engine Control System Wiring Diagram" (Page 1A-6).

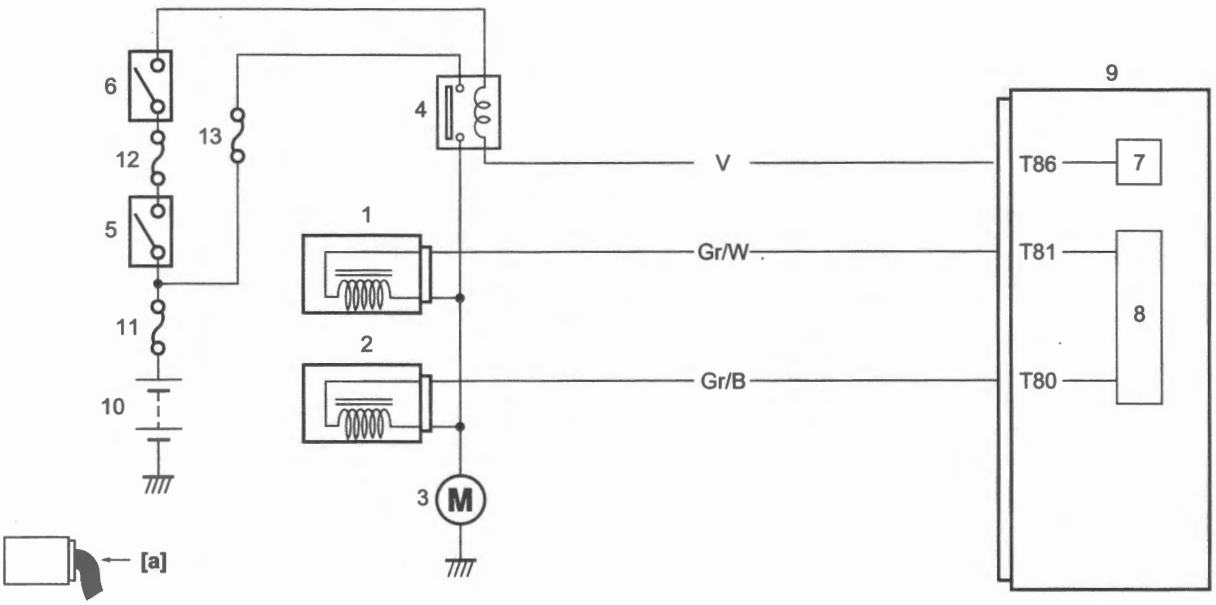

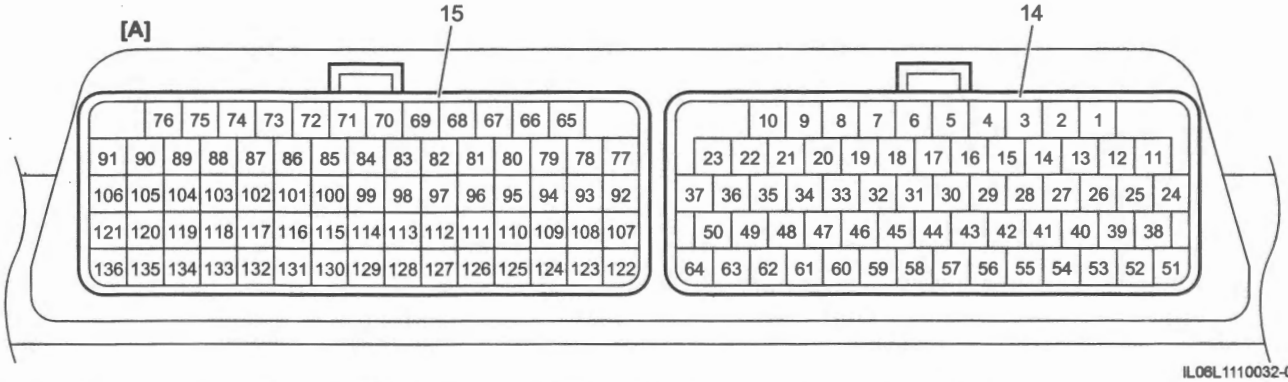

IL06L1110032-03

[A]: ECM coupler "T" (View [a])	6. Engine stop / starter switch ("RUN / STOP" position)	12. Ignition fuse (10 A)
1. Fuel injector #1	7. Fuel pump relay drive circuit	13. Fuel fuse (10 A)
2. Fuel injector #2	8. Fuel injector drive circuit	14. Coupler "A"
3. Fuel pump	9. ECM	15. Coupler "B"
4. FP relay	10. Battery	
5. Ignition switch	11. Main fuse (30 A)	

Troubleshooting

Step 1

Fuel injector #1 power supply circuit check

1) Turn the ignition switch OFF.
2) Disconnect the fuel injector coupler #1. ☞(Page 1G-16)
3) Check for proper terminal connection to the fuel injector #1 coupler (1).
4) If connections are OK, turn the ignition switch ON.
5) Measure the voltage between "T2" and ground.

Fuel injector power supply voltage
[Standard]: Battery voltage

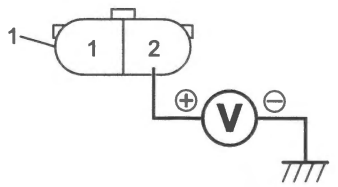

IL41K1110025-01

Is check result OK?

Yes — Go to Step 2.

No — Repair or replace the "T2" wire at the fuel injector #1 coupler.

Step 2

Fuel injector #1 drive circuit check

1) Turn the ignition switch OFF.
2) Disconnect the ECM coupler "B". ☞(Page 1C-2)
3) Check for proper terminal connection to the ECM coupler "B".
4) If connections are OK, check the following points.
   - Resistance
     - Between "T1" at the fuel injector #1 coupler (1) and "T81" at the ECM coupler "B" (2): less than 1 Ω

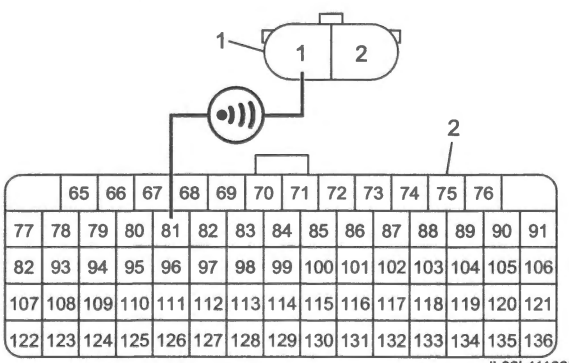

IL06L1110033-01

   - Between "T1" at the fuel injector #1 coupler (1) and ground: infinity

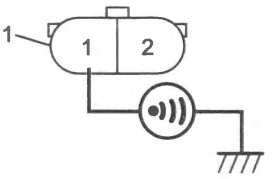

IL41K1110027-01

   - Between "T1" and "T2" at the fuel injector #1 coupler (1): infinity

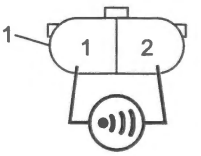

IL41K1110028-01

   - Voltage
     - Turn the ignition switch ON.
     - Between "T1" at the fuel injector #1 coupler (1) and ground: approx. 0 V

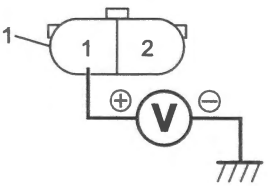

IL41K1110029-01

Is check result OK?

Yes — Go to Step 3.

No — Repair or replace the "T1" wire at the fuel injector #1 coupler.

Step 3

Fuel injector #1 resistance check

1) Turn the ignition switch OFF.
2) Measure the fuel injector #1 resistance. ☞(Page 1G-16)

Is check result OK?

Yes — Replace the ECM and inspect it again. ☞(Page 1C-2)

No — Replace the fuel injector #1. ☞(Page 1G-16)

DTC P0202 (C33)

BENL06L21104019

DTC Detecting Condition and Trouble Area

DTC detecting condition	Trouble area
P0201 (C32): Injector Circuit / Open – Cylinder 2 Fuel injector #2 signal is interrupted by 8 times or more continuity although CKP signal is detected. (1 D/C detection logic)	• Fuel injector #2 • Fuel injector #2 circuit • ECM

Wiring Diagram

Refer to "Engine Control System Wiring Diagram" (Page 1A-6).

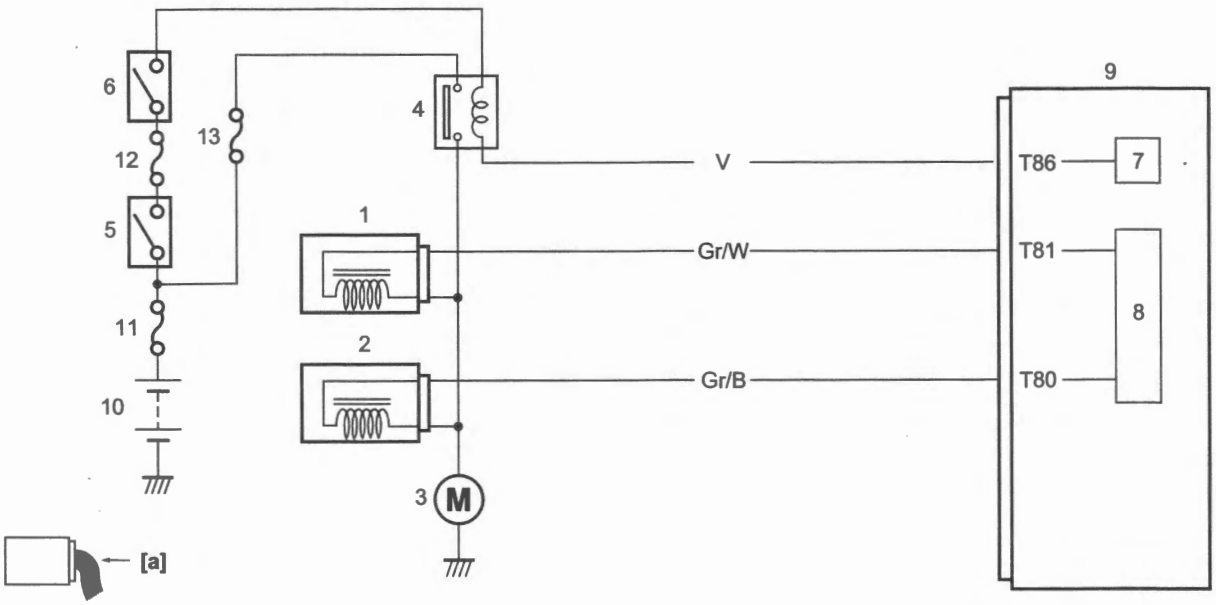

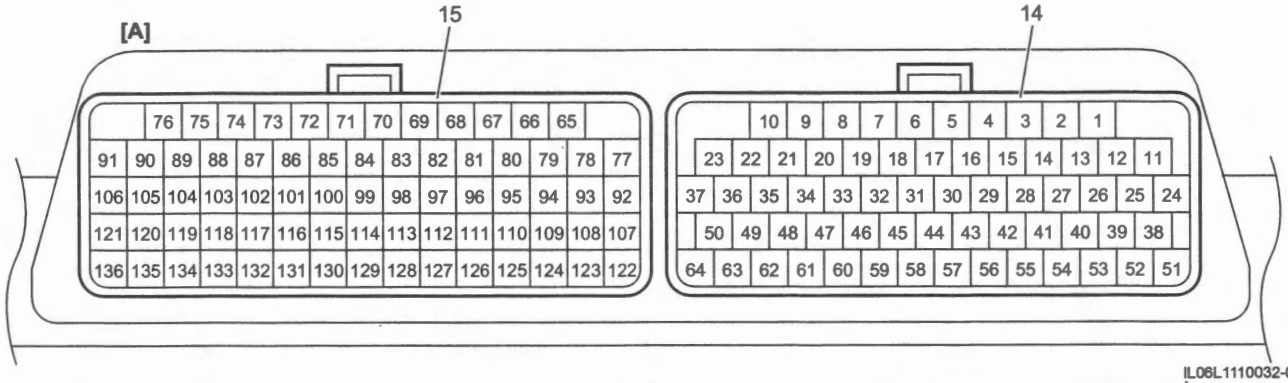

IL06L1110032-03

[A]: ECM coupler "T" (View [a])	6. Engine stop / starter switch ("RUN / STOP" position)	12. Ignition fuse (10 A)
1. Fuel injector #1	7. Fuel pump relay drive circuit	13. Fuel fuse (10 A)
2. Fuel injector #2	8. Fuel injector drive circuit	14. Coupler "A"
3. Fuel pump	9. ECM	15. Coupler "B"
4. FP relay	10. Battery	
5. Ignition switch	11. Main fuse (30 A)	

Troubleshooting

Step 1

Fuel injector #2 power supply circuit check

1) Turn the ignition switch OFF.
2) Disconnect the fuel injector coupler #2. ☞(Page 1G-16)
3) Check for proper terminal connection to the fuel injector #2 coupler (1).
4) If connections are OK, turn the ignition switch ON.
5) Measure the voltage between "T2" and ground.

Fuel injector power supply voltage
[Standard]: Battery voltage

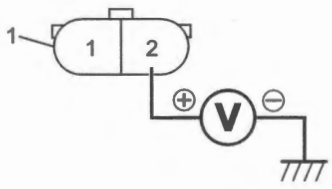

IL41K1110025-01

Is check result OK?

Yes — Go to Step 2.

No — Repair or replace the "T2" wire at the fuel injector #2 coupler.

Step 2

Fuel injector #2 drive circuit check

1) Turn the ignition switch OFF.
2) Disconnect the ECM coupler "B". ☞(Page 1C-2)
3) Check for proper terminal connection to the ECM coupler "B".
4) If connections are OK, check the following points.
   - Resistance
     - Between "T1" at the fuel injector #2 coupler (1) and "T80" at the ECM coupler "B" (2): less than 1 Ω

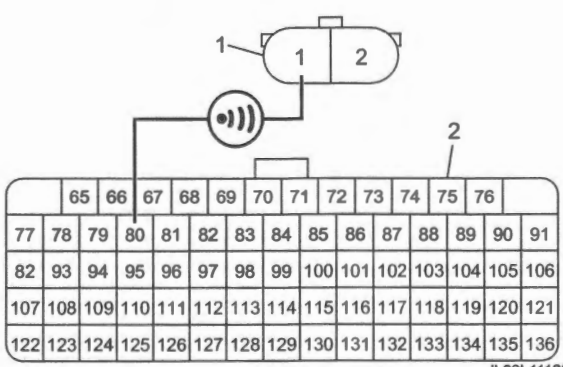

IL06L1110034-01

     - Between "T1" at the fuel injector #2 coupler (1) and ground: infinity

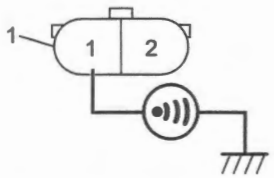

IL41K1110027-01

     - Between "T1" and "T2" at the fuel injector #2 coupler (1): infinity

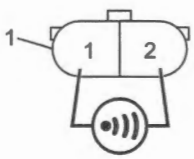

IL41K1110028-01

   - Voltage
     - Turn the ignition switch ON.
     - Between "T1" at the fuel injector #2 coupler (1) and ground: approx. 0 V

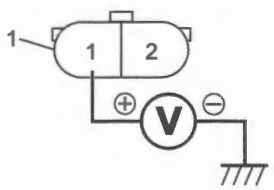

IL41K1110029-01

Is check result OK?

Yes — Go to Step 3.

No — Repair or replace the "T1" wire at the fuel injector #2 coupler.

Step 3

Fuel injector #2 resistance check

1) Turn the ignition switch OFF.
2) Measure the fuel injector #2 resistance. ☞(Page 1G-16)

Is check result OK?

Yes — Replace the ECM and inspect it again. ☞(Page 1C-2)

No — Replace the fuel injector #2. ☞(Page 1G-16)

DTC P0220 / P0223 (C29)

BENL06L21104020

DTC Detecting Condition and Trouble Area

DTC detecting condition	Trouble area
P0220 (C29): TP Sensor / Switch "B" Circuit TP sensor #1 (sub) output voltage is lower than 0.50 V. (1 D/C detection logic)	• TP sensor #1 (sub) • TP sensor #1 (sub) circuit • ECM
P0223 (C29): TP Sensor / Switch "B" Circuit High TP sensor #1 (sub) output voltage is higher than 4.75 V. (1 D/C detection logic)	

Wiring Diagram

Refer to "Engine Control System Wiring Diagram" (Page 1A-6).

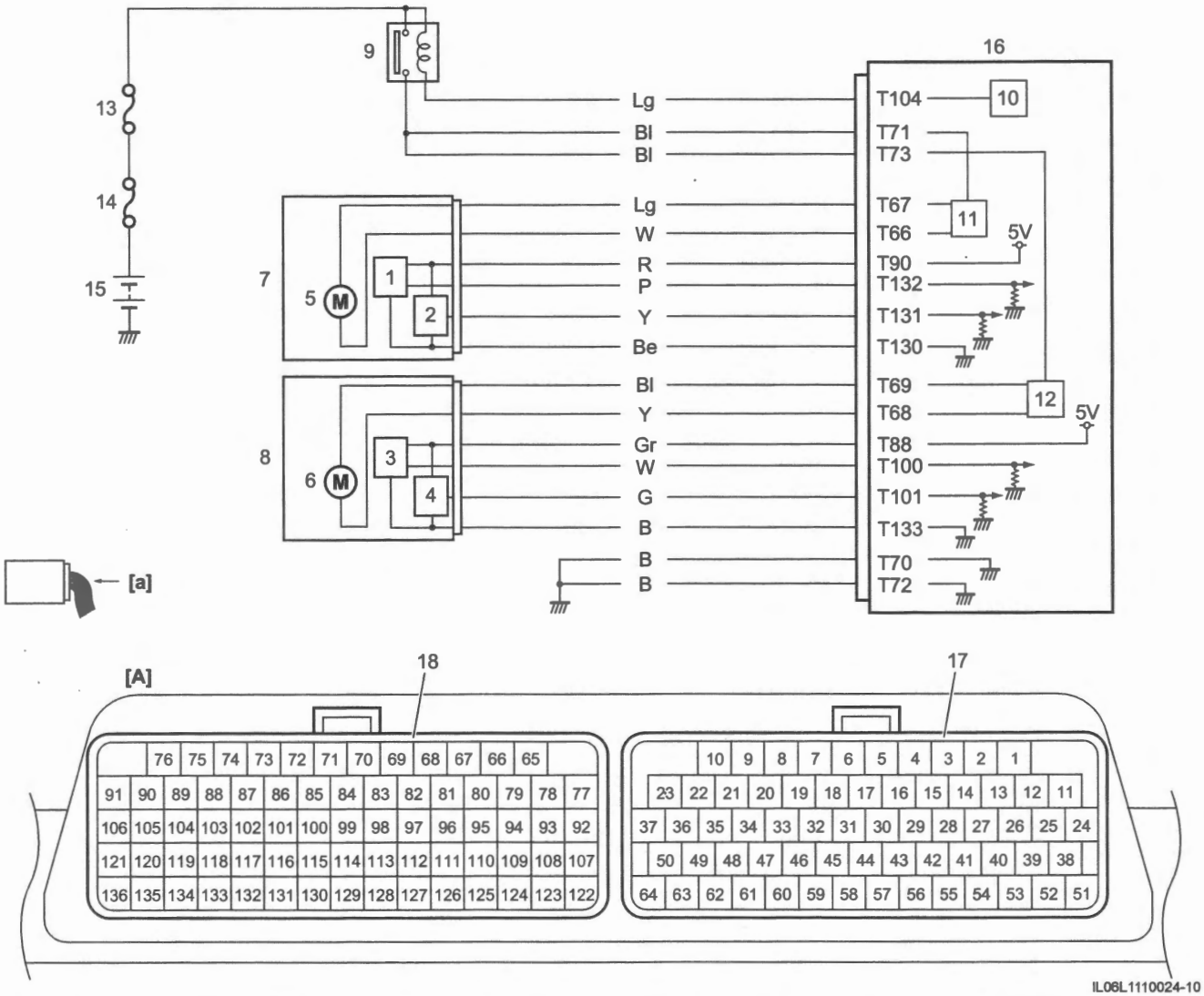

IL06L1110024-10

[A]: ECM coupler "T" (View [a])	7. Throttle body #1	14. Main fuse (30 A)
1. TP sensor #1 (main)	8. Throttle body #2	15. Battery
2. TP sensor #1 (sub)	9. Throttle valve motor relay	16. ECM
3. TP sensor #2 (main)	10. Throttle valve motor relay drive circuit	17. Coupler "A"
4. TP sensor #2 (sub)	11. Throttle valve motor #1 drive circuit	18. Coupler "B"
5. Throttle valve motor #1	12. Throttle valve motor #2 drive circuit	
6. Throttle valve motor #2	13. Fuel fuse (10 A)	

Troubleshooting

Step 1

TP sensor #1 power supply circuit check

1) Turn the ignition switch OFF.
2) Disconnect the throttle body #1 coupler (1). ☞(Page 1D-7)
3) Check for proper terminal connection to the throttle body #1 coupler (1).
4) If connections are OK, turn the ignition switch ON.
5) Measure the voltage between the "T2" and "T4".

TP sensor power supply voltage
[Standard]: 4.5 – 5.5 V

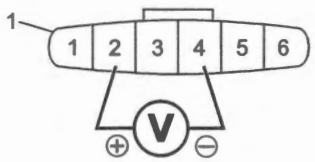

IL06L1110025-05

Is check result OK?

Yes — Go to Step 3.

No — Go to Step 2.

Step 2

TP sensor #1 ground circuit check

1) Measure the voltage between the "T2" at the throttle body #1 coupler (1) and ground.

TP sensor power supply voltage
[Standard]: 4.5 – 5.5 V

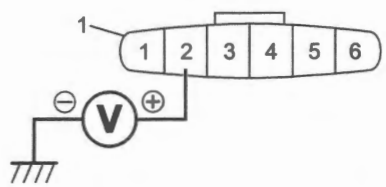

IL06L1110026-05

Is check result OK?

Yes — Repair or replace the "T4" wire at the throttle body #1 coupler.

No — Repair or replace the "T2" wire at the throttle body #1 coupler.

Step 3

TP sensor #1 (sub) signal circuit check

1) Turn the ignition switch OFF.
2) Disconnect the ECM coupler "B". ☞(Page 1C-2)
3) Check for proper terminal connection to the ECM coupler "B".
4) If connections are OK, check the following points.
   - Resistance
     – Between "T1" at the throttle body #1 coupler (1) and "T131" at the ECM coupler "B" (2): less than 1 Ω

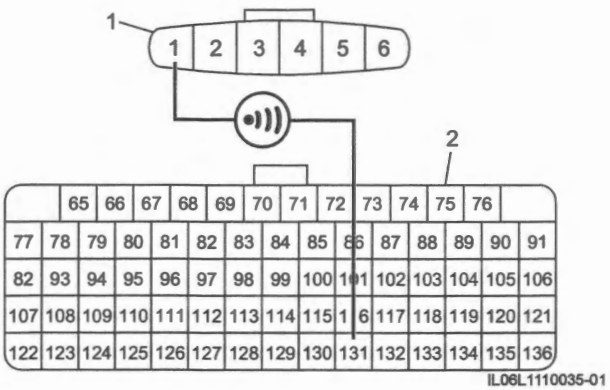

IL06L1110035-01

     – Between "T1" at the throttle body #1 coupler (1) and ground: infinity

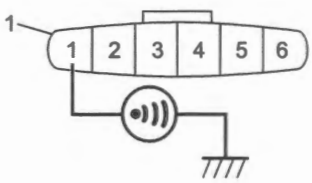

IL06L1110036-02

     – Between "T1" and other terminal at the throttle body #1 coupler (1): infinity

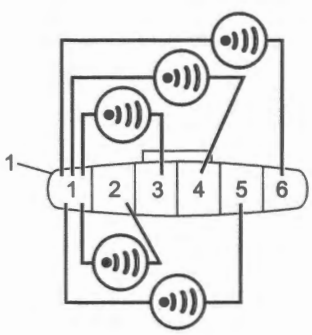

IL06L1110037-02

- Voltage
  - Turn the ignition switch ON.
  - Between "T1" at the throttle body #1 coupler (1) and ground: approx. 0 V

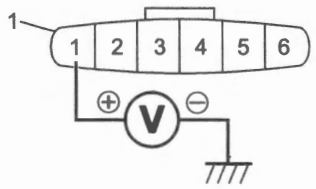

IL06L1110038-02

Is check result OK?

Yes — Go to Step 4.

No — Repair or replace the "T1" wire at the throttle body #1 coupler.

Step 4

TP sensor #1 (sub) output voltage check

1) Measure the TP sensor #1 (sub) output voltage. ☞(Page 1C-7)

Is check result OK?

Yes — Replace the ECM and inspect it again. ☞(Page 1C-2)

No — Replace the throttle body #1. ☞(Page 1D-7)

DTC P0225 / P0228 (C86)

BENL06L21104021

DTC Detecting Condition and Trouble Area

DTC detecting condition	Trouble area
P0225 (C86): Throttle / Pedal Position Sensor / Switch "C" Circuit TP sensor #2 (main) output voltage is lower than 0.10 V. (1 D/C detection logic)	• TP sensor #2 (main) • TP sensor #2 (main) circuit • ECM
P0228 (C86): Throttle / Pedal Position Sensor / Switch "C" Circuit High TP sensor #2 (main) output voltage is higher than 4.30 V. (1 D/C detection logic)	

Wiring Diagram

Refer to "Engine Control System Wiring Diagram" (Page 1A-6).

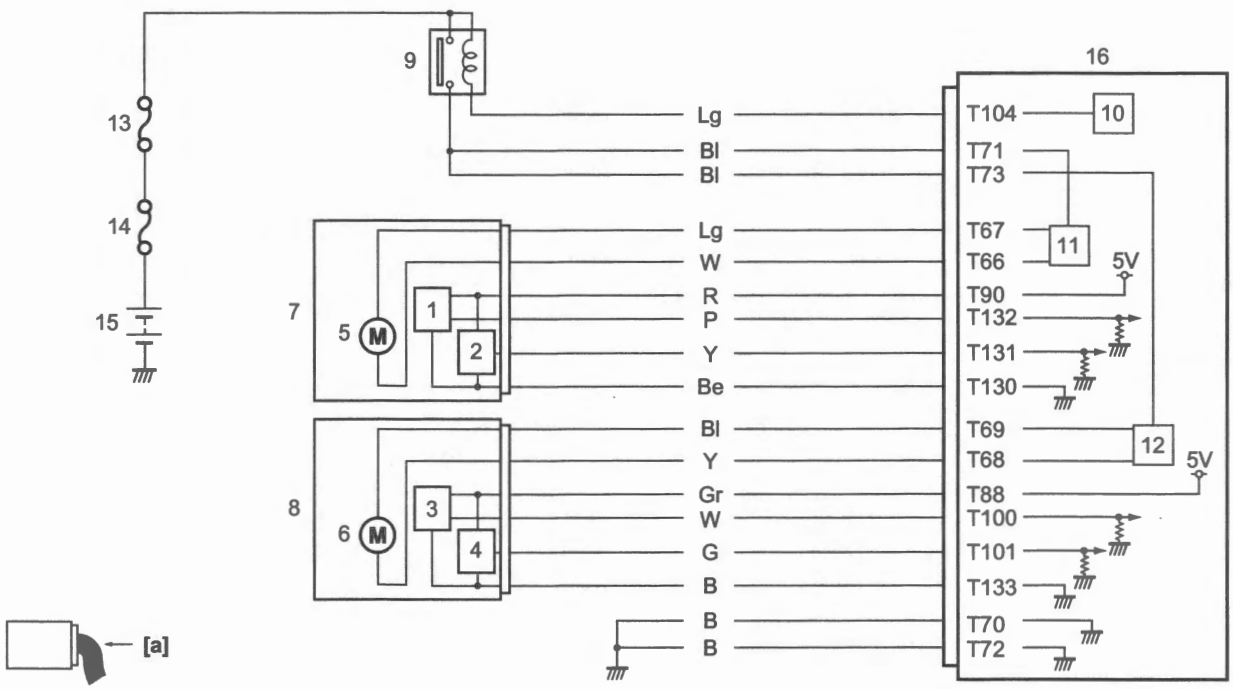

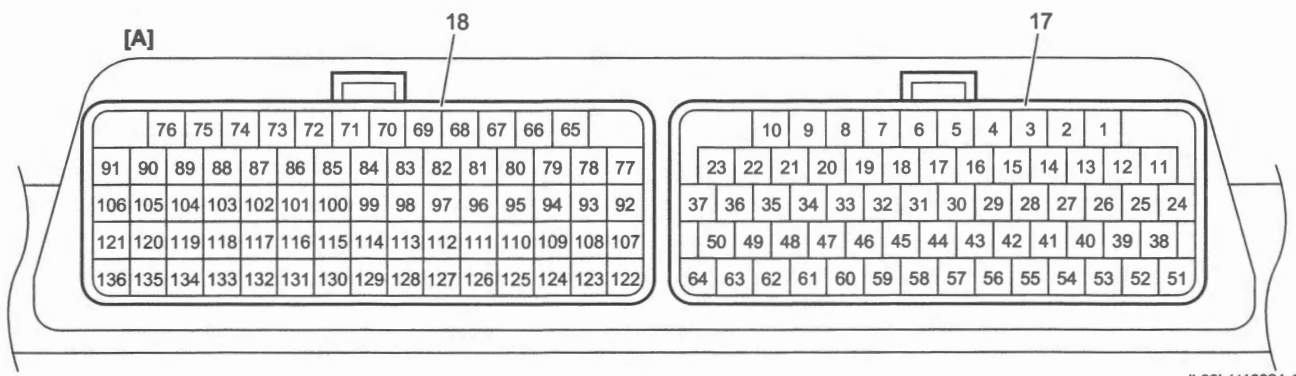

IL06L1110024-10

[A]: ECM coupler "T" (View [a])	7. Throttle body #1	14. Main fuse (30 A)
1. TP sensor #1 (main)	8. Throttle body #2	15. Battery
2. TP sensor #1 (sub)	9. Throttle valve motor relay	16. ECM
3. TP sensor #2 (main)	10. Throttle valve motor relay drive circuit	17. Coupler "A"
4. TP sensor #2 (sub)	11. Throttle valve motor #1 drive circuit	18. Coupler "B"
5. Throttle valve motor #1	12. Throttle valve motor #2 drive circuit	
6. Throttle valve motor #2	13. Fuel fuse (10 A)	

Troubleshooting

Step 1

TP sensor #2 power supply circuit check

1) Turn the ignition switch OFF.
2) Disconnect the throttle body #2 coupler (1). ☞(Page 1D-7)
3) Check for proper terminal connection to the throttle body #2 coupler (1).
4) If connections are OK, turn the ignition switch ON.
5) Measure the voltage between the "T2" and "T4".

TP sensor power supply voltage
[Standard]: 4.5 – 5.5 V

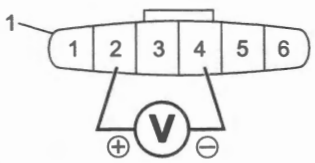

IL06L1110025-05

Is check result OK?

Yes Go to Step 3.

No Go to Step 2.

Step 2

TP sensor #2 ground circuit check

1) Measure the voltage between the "T2" at the throttle body #2 coupler (1) and ground.

TP sensor power supply voltage
[Standard]: 4.5 – 5.5 V

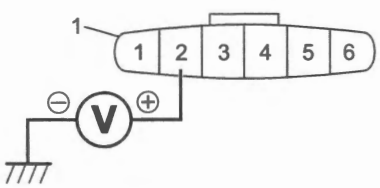

IL06L1110026-05

Is check result OK?

Yes Repair or replace the "T4" wire at the throttle body #2 coupler.

No Repair or replace the "T2" wire at the throttle body #2 coupler.

Step 3

TP sensor #2 (main) signal circuit check

1) Turn the ignition switch OFF.
2) Disconnect the ECM coupler "B". ☞(Page 1C-2)
3) Check for proper terminal connection to the ECM coupler "B".
4) If connections are OK, check the following points.
   - Resistance
     – Between "T3" at the throttle body #2 coupler (1) and "T100" at the ECM coupler "B" (2): less than 1 Ω

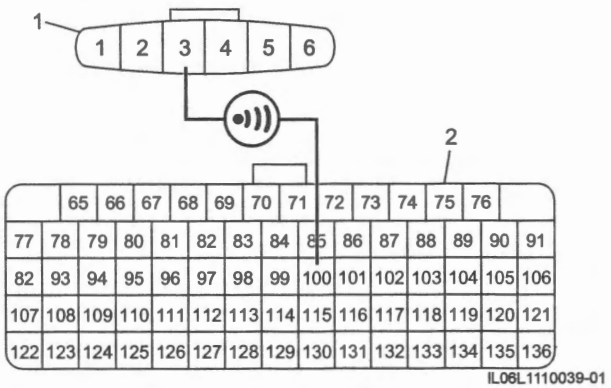

IL06L1110039-01

     – Between "T3" at the throttle body #2 coupler (1) and ground: infinity

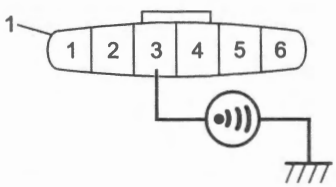

IL06L1110028-02

     – Between "T3" and other terminal at the throttle body #2 coupler (1): infinity

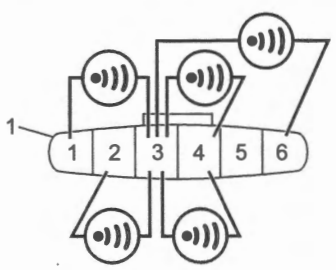

IL06L1110029-02

   - Voltage
     – Turn the ignition switch ON.
     – Between "T3" at the throttle body #2 coupler (1) and ground: approx. 0 V

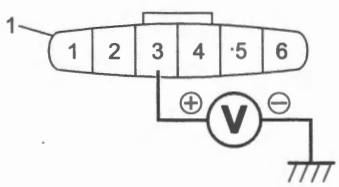

IL06L1110030-02

Is check result OK?

Yes — Go to Step 4.

No — Repair or replace the "T3" wire at the throttle body #2 coupler.

Step 4

TP sensor #2 (main) output voltage check

1) Measure the TP sensor #2 (main) output voltage. ☞(Page 1C-7)

Is check result OK?

Yes — Replace the ECM and inspect it again. ☞(Page 1C-2)

No — Replace the throttle body #2. ☞(Page 1D-7)

DTC P0232 / P023F (C41)

BENL06L21104022

DTC Detecting Condition and Trouble Area

DTC detecting condition	Trouble area
P0232 (C41): FP Secondary Circuit High Voltage is input to ECM although the FP relay is OFF. (1 D/C detection logic)	• Fuel pump relay • FP relay circuit • ECM
P023F (C41): Fuel Pump Secondary Circuit / Open No voltage is input to ECM although the FP relay is ON. (1 D/C detection logic)	

Wiring Diagram

Refer to "Engine Control System Wiring Diagram" (Page 1A-6).

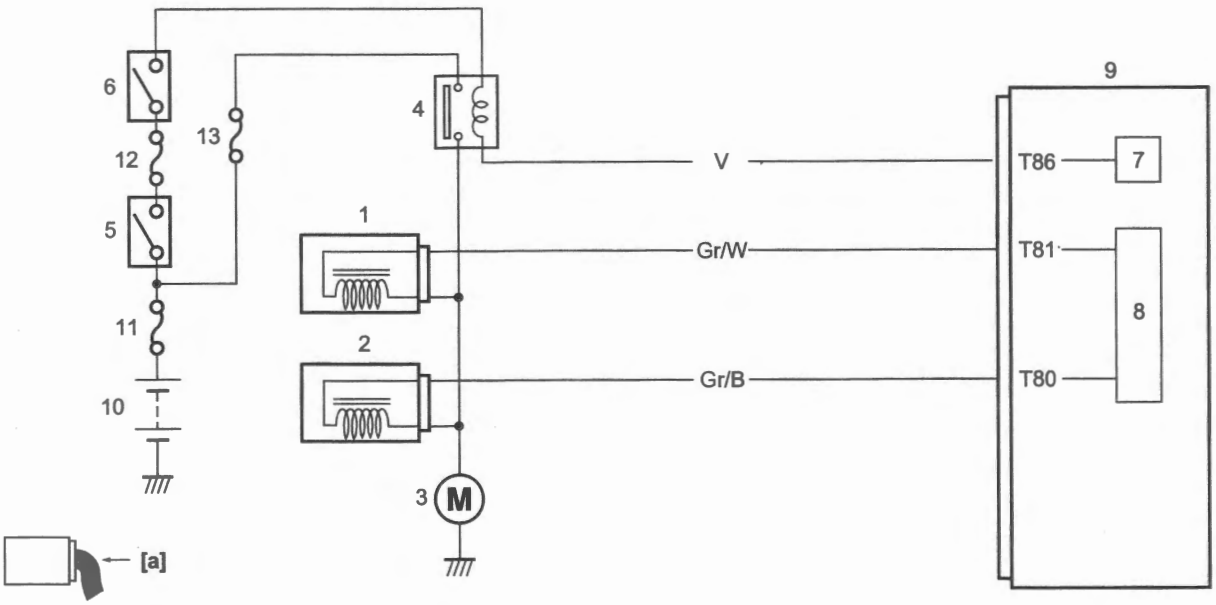

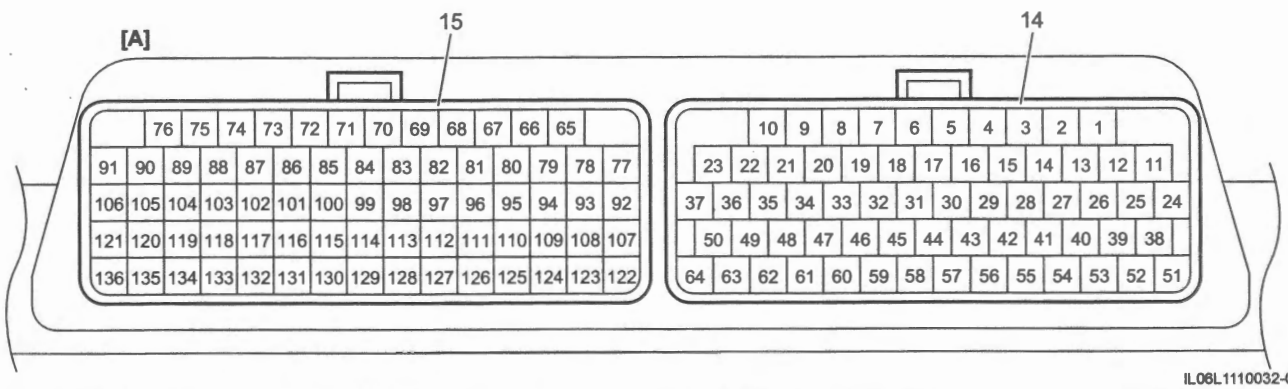

IL06L1110032-03

[A]: ECM coupler "T" (View [a])	6. Engine stop / starter switch ("RUN / STOP" position)	12. Ignition fuse (10 A)
1. Fuel injector #1	7. Fuel pump relay drive circuit	13. Fuel fuse (10 A)
2. Fuel injector #2	8. Fuel injector drive circuit	14. Coupler "A"
3. Fuel pump	9. ECM	15. Coupler "B"
4. FP relay	10. Battery	
5. Ignition switch	11. Main fuse (30 A)	

Troubleshooting

Step 1

FP relay power supply circuit check

1) Turn the ignition switch OFF.
2) Disconnect the relay box couplers. ☞(Page 9A-42).
3) Check for proper terminal connection to the relay box couplers.
4) If connections are OK, turn the ignition switch ON.
5) Measure the voltage between "T1" at the relay box coupler (1) and ground.
6) If OK, measure the voltage between "T24" at the relay box coupler (2) and ground.

FP relay power supply voltage
[Standard]: Battery voltage

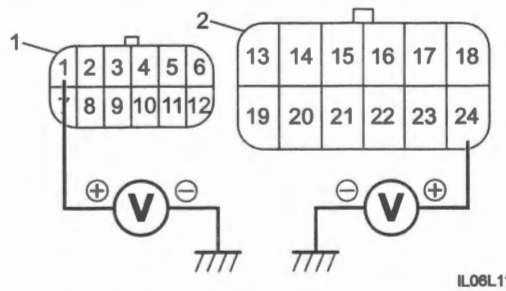

IL06L1110040-01

Is check result OK?

Yes — Go to Step 2.

No — Repair or replace the defective wire harness.

Step 2

FP relay check

1) Check the FP relay. ☞(Page 1G-15)

Is check result OK?

Yes — Go to Step 3.

No — Replace the relay box. ☞(Page 9A-42)

Step 3

FP relay drive circuit check

1) Turn the ignition switch OFF.
2) Disconnect the ECM coupler "B". ☞(Page 1C-2)
3) Check for proper terminal connection to the ECM coupler "B".
4) If connections are OK, check the following points.
   - Resistance
     - Between "T7" at the relay box coupler (1) and "T86" at the ECM coupler "B" (2): less than 1 Ω

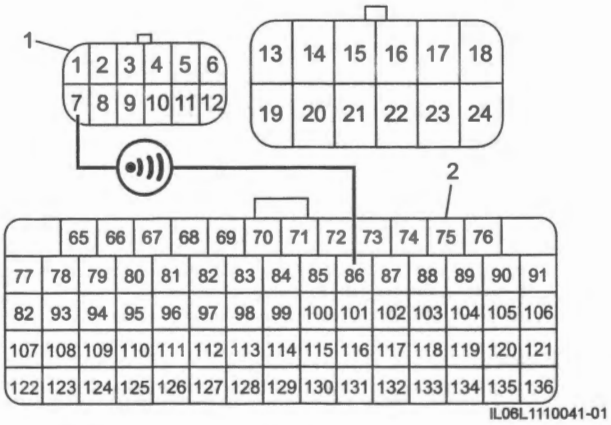

IL06L1110041-01

     - Between "T7" at the relay box coupler (1) and ground: infinity

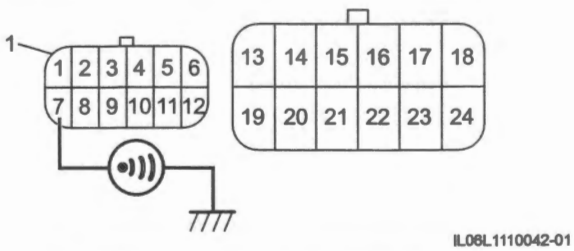

IL06L1110042-01

     - Between "T7" and other terminal (2) at relay box coupler (1): Infinity

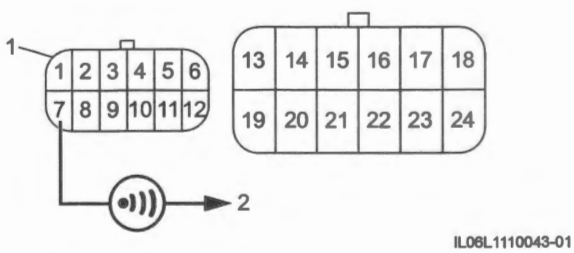

IL06L1110043-01

   - Voltage
     - Turn the ignition switch ON.
     - Between "T7" at the relay box coupler (1) and ground: approx. 0 V

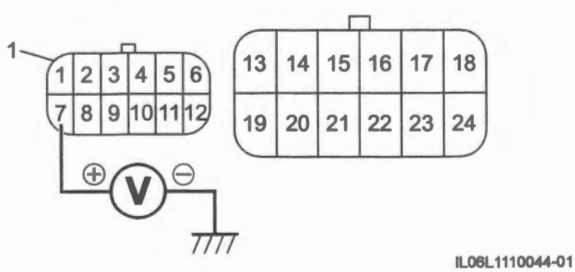

IL06L1110044-01

Is check result OK?

Yes — Go to Step 4.

No — Repair or replace the "T7" wire at the relay box coupler.

Step 4

FP relay signal circuit check

1) Turn the ignition switch OFF.
2) Check the following points.
   - Resistance
     - Between "T18" at the relay box coupler (1) and "T87" at the ECM coupler "B" (2): less than 1 Ω

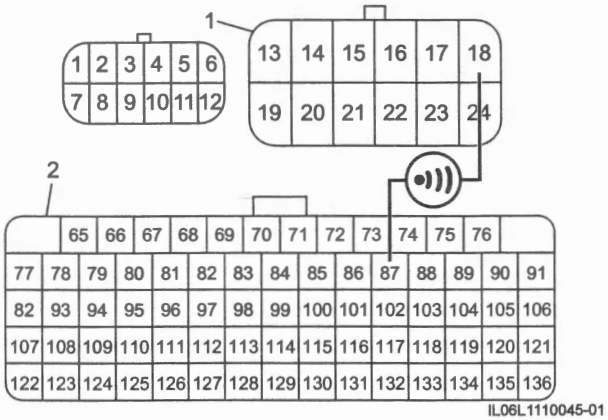

IL06L1110045-01

     - Between "T18" at the relay box coupler (1) and ground: infinity

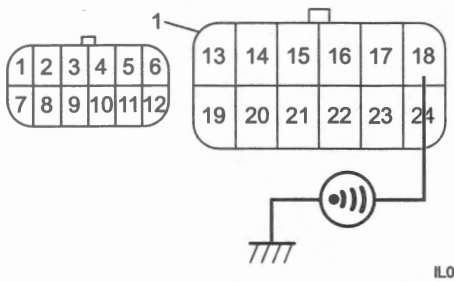

IL06L1110046-01

     - Between "T18" and other terminal (2) at relay box coupler (1): Infinity

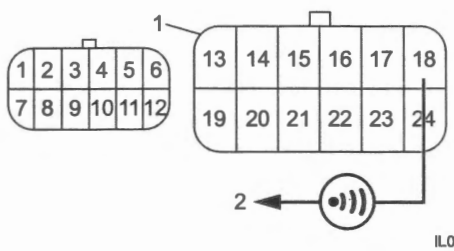

IL06L1110047-01

   - Voltage
     - Turn the ignition switch ON.
     - Between "T18" at the relay box coupler (1) and ground: approx. 0 V

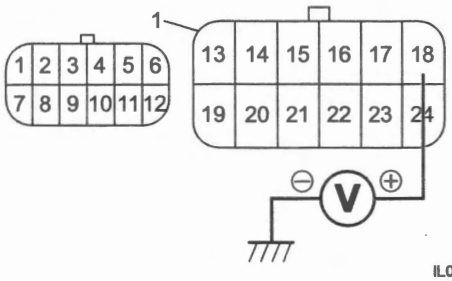

IL06L1110048-01

Is check result OK?

Yes	Replace the ECM and inspect it again. ☞(Page 1C-2)
No	Repair or replace the "T18" wire at the relay box coupler.

DTC P0300 / P0301 / P0302 (C74)

BENL06L21104023

DTC Detecting Condition and Trouble Area

DTC detecting condition	Trouble area
P0300 (C74): Random / Multiple Cylinder Misfire Detected Any of the following conditions is met. • Misfire, which causes damage to the catalyst, is detected at 2 cylinders, under the specified condition. (The MIL blinks) • Misfire, which affects exhaust emission adversely, is detected at 2 cylinders, under the specified condition. (3 D/C detection logic)	• Fuel system • Air intake system • Exhaust system • Emission control system • Ignition system • Engine compression • Valve clearance • Valve timing • Drive chain • ECM
P0301 (C74): Cylinder 1 Misfire Detected Any of the following conditions is met. • Misfire, which causes damage to the catalyst, is detected at cylinder #1, under the specified condition. (The MIL blinks) • Misfire, which affects exhaust emission adversely, is detected at cylinder #1, under the specified condition. (3 D/C detection logic)	
P0302 (C74): Cylinder 2 Misfire Detected Any of the following conditions is met. • Misfire, which causes damage to the catalyst, is detected at cylinder #2, under the specified condition. (The MIL blinks) • Misfire, which affects exhaust emission adversely, is detected at cylinder #2, under the specified condition. (3 D/C detection logic)	

Troubleshooting

Step 1

Fuel level check

1) Check fuel level by fuel level indicator.

Does it indicate "E" level (empty)?

Yes — Add fuel, "Step 5: Final Confirmation Test" of "Engine Control System Check" (Page 1A-9) and recheck DTC.

No — Go to Step 2.

Step 2

Fuel quality check

1) Check fuel in fuel tank for smell, color and quality.

Is check result OK?

Yes — Go to Step 3.

No — Replace fuel with correct type fuel, "Step 5: Final Confirmation Test" of "Engine Control System Check" (Page 1A-9) and recheck DTC.

Step 3

Drive chain check

1) Check the drive chain slack

Is check result OK?

Yes — Adjust the drive chain slack or replace the drive chain, "Step 5: Final Confirmation Test" of "Engine Control System Check" (Page 1A-9) and recheck DTC.

No — Go to Step 4.

Step 4

Fuel system and emission control system check

1) Check the following points related to fuel and emission control systems.
   - Fuel pressure: ☞(Page 1G-3)
   - Fuel injector circuit: Refer to "DTC P0201 (C32)" (Page 1A-48) and/or "DTC P0202 (C33)" (Page 1A-50).
   - Fuel injector: ☞(Page 1G-17)
   - PCV hose: ☞(Page 1B-5)
   - PAIR system: ☞(Page 1B-5)
   - EVAP system: ☞(Page 1B-8)

Is check result OK?

Yes — Go to Step 5.

No — Repair or replace defective parts.

Step 5

Exhaust system and air intake system check

1) Turn the ignition switch OFF.
   - Exhaust system: ☞(Page 1K-7)
   - Check air intake system for clogging and leakage.

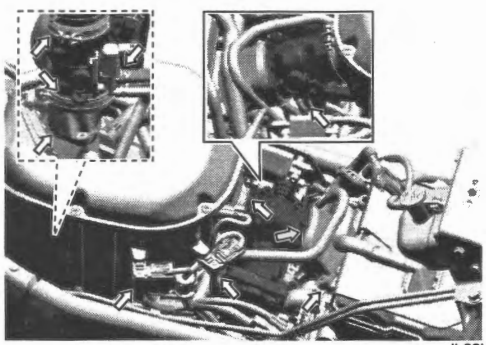

IL06L1110153-03

Is check result OK?

Yes — Go to Step 6.

No — Repair or replace defective parts.

Step 6

Engine mechanical system check

1) Check the following points.
   - Engine compression: ☞(Page 1D-2)
   - Valve clearance: ☞(Page 1D-22)
   - Valve timing: ☞(Page 1D-36)

Is check result OK?

Yes — Check ECM power supply and ground circuits. ☞(Page 1A-133)

If circuit is OK, replace the ECM and inspect it again. ☞(Page 1C-2)

No — Repair or replace defective parts.

DTC P0335 (C12)

BENL06L21104024

DTC Detecting Condition and Trouble Area

DTC detecting condition	Trouble area
P0335 (C12): CKP Sensor "A" Circuit CKP sensor signal is not input to ECM for specified time, after receiving the starter relay ON signal. (1 D/C detection logic)	• Metal particles or foreign material being stuck on the CKP sensor and rotor tip • CKP sensor • CKP sensor circuit • ECM

Wiring Diagram

Refer to "Engine Control System Wiring Diagram" (Page 1A-6).

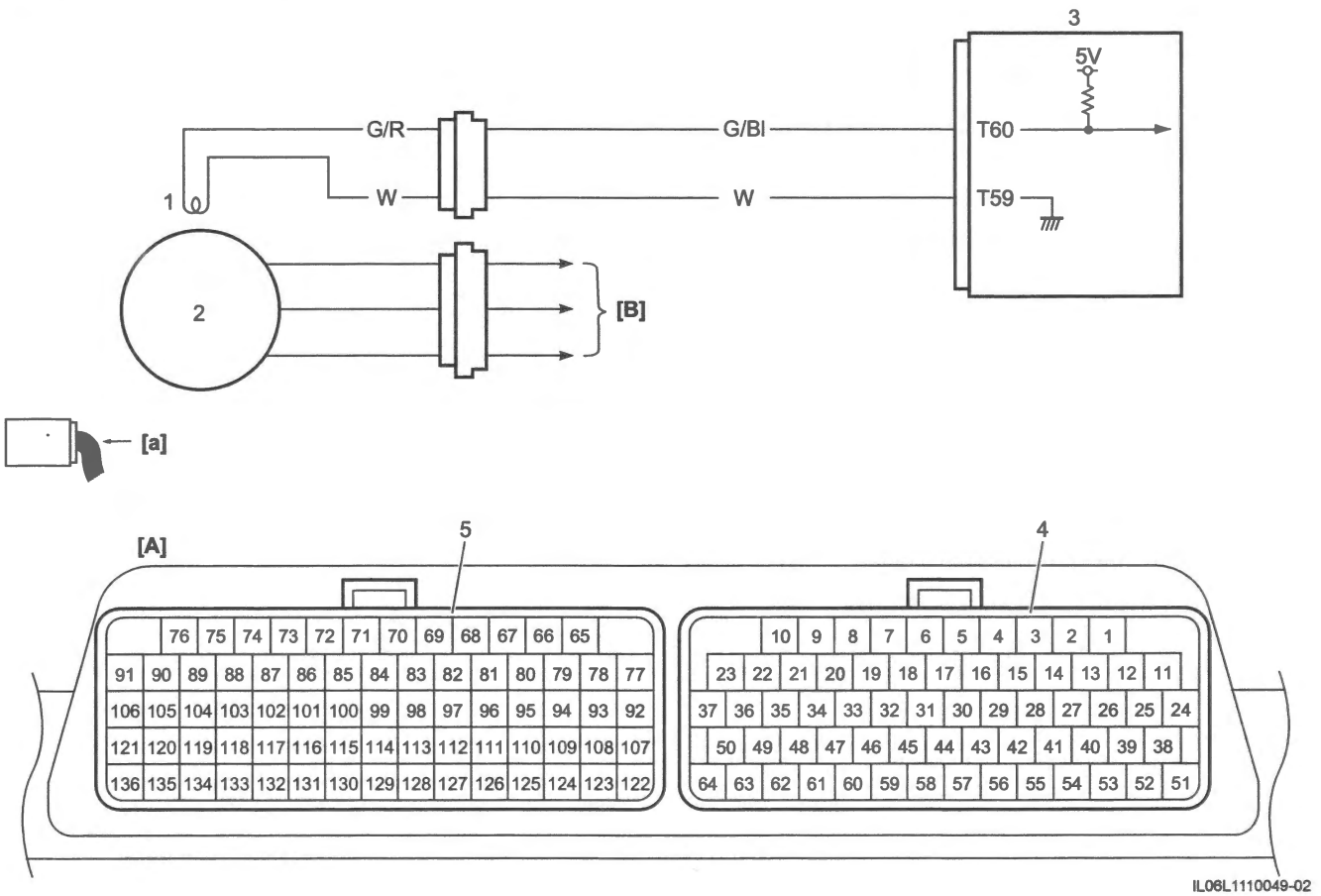

IL06L1110049-02

[A]: ECM coupler "T" (View [a])	2. Generator	5. Coupler "B"
[B]: To regulator/rectifier	3. ECM	
1. CKP sensor	4. Coupler "A"	

Troubleshooting

Step 1

CKP sensor signal circuit check

1) Turn the ignition switch OFF.
2) Disconnect the CKP sensor lead wire coupler and ECM coupler "A".
   - CKP sensor: ☞(Page 1C-9)
   - ECM: ☞(Page 1C-2)
3) Check for proper terminal connection to the CKP sensor lead wire coupler and ECM coupler "A".
4) If connections are OK, check the following points.
   - Resistance
     - Between "T1" at the CKP sensor lead wire coupler (1) and "T60" at the ECM coupler "A" (2): less than 1 Ω
     - Between "T2" at the CKP sensor lead wire coupler and "T59" at the ECM coupler "A": less than 1 Ω

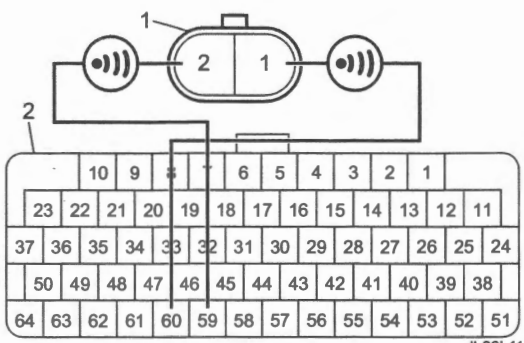

IL06L1110050-01

     - Between "T1" at the CKP sensor lead wire coupler (1) and ground: infinity
     - Between "T2" at the CKP sensor lead wire coupler and ground: infinity

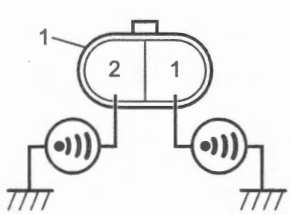

IL41K1110038-01

     - Between "T1" and "T2" at the CKP sensor lead wire coupler (1): infinity

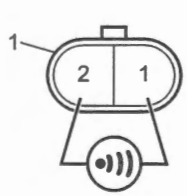

IL41K1110039-01

   - Voltage
     - Turn the ignition switch ON.
     - Between "T1" at the CKP sensor lead wire coupler (1) and ground: approx. 0 V
     - Between "T2" at the CKP sensor lead wire coupler and ground: approx. 0 V

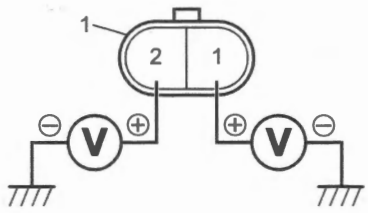

IL41K1110040-01

Is check result OK?

Yes — Go to Step 2.

No — Repair or replace the defective wire harness.

Step 2

CKP sensor resistance check

1) Turn the ignition switch OFF.
2) Measure the CKP sensor resistance. Refer to "CKP Sensor Resistance" under "CKP Sensor Inspection" in Section 1C (Page 1C-9).

Is check result OK?

Yes — Go to Step 3.

No — Replace the CKP sensor. ☞(Page 1C-10)

Step 3

CKP sensor peak voltage check

1) Connect the ECM coupler.
2) Crank the engine several seconds with the starter motor, and measure the CKP sensor peak voltage with the peak volt adapter. Refer to "CKP Sensor Peak Voltage" under "CKP Sensor Inspection" in Section 1C (Page 1C-9).

Is check result OK?

Yes — Replace the ECM and inspect it again. ☞(Page 1C-2)

No — Go to Step 4.

Step 4

CKP sensor and generator rotor check

1) Turn the ignition switch OFF.
2) Remove the generator cover. ☞(Page 1J-5)
3) Check that end face of the CKP sensor (1) and generator rotor teeth (2) are free from any metal particles and damage.

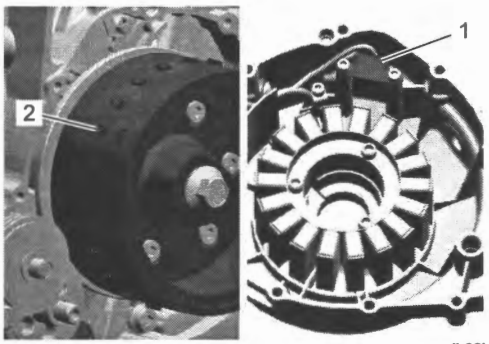

IL06L1110152-01

Is check result OK?

Yes	Replace the ECM and inspect it again. ☞(Page 1C-2)
No	Clean or replace defective parts.

DTC P0351 (C24) / P0352 (C25) / P0353 (C26) / P0354 (C27)

BENL06L21104025

DTC Detecting Condition and Trouble Area

DTC detecting condition	Trouble area
P0351 (C24): Ignition Coil "A" Primary / Secondary Circuit Ignition coil #11 signal is interrupted by 8 times or more continuity although CKP signal is detected. (1 D/C detection logic)	Refer to "No Spark or Poor Spark" in Section 1H (Page 1H-3).
P0352 (C25): Ignition Coil "B" Primary / Secondary Circuit Ignition coil #21 signal is interrupted by 8 times or more continuity although CKP signal is detected. (1 D/C detection logic)	
P0353 (C26): Ignition Coil "C" Primary / Secondary Circuit Ignition coil #12 signal is interrupted by 8 times or more continuity although CKP signal is detected. (1 D/C detection logic)	
P0354 (C27): Ignition Coil "D" Primary / Secondary Circuit Ignition coil #22 signal is interrupted by 8 times or more continuity although CKP signal is detected. (1 D/C detection logic)	

DTC P0410 (C61)

BENL06L21104026

DTC Detecting Condition and Trouble Area

DTC detecting condition	Trouble area
P0410 (C61): Secondary Air Injection System PAIR air flow volume is out of the specified range, under the specified condition. (3 D/C detection logic)	• PAIR system • ECM

Wiring Diagram

Refer to "Engine Control System Wiring Diagram" (Page 1A-6).

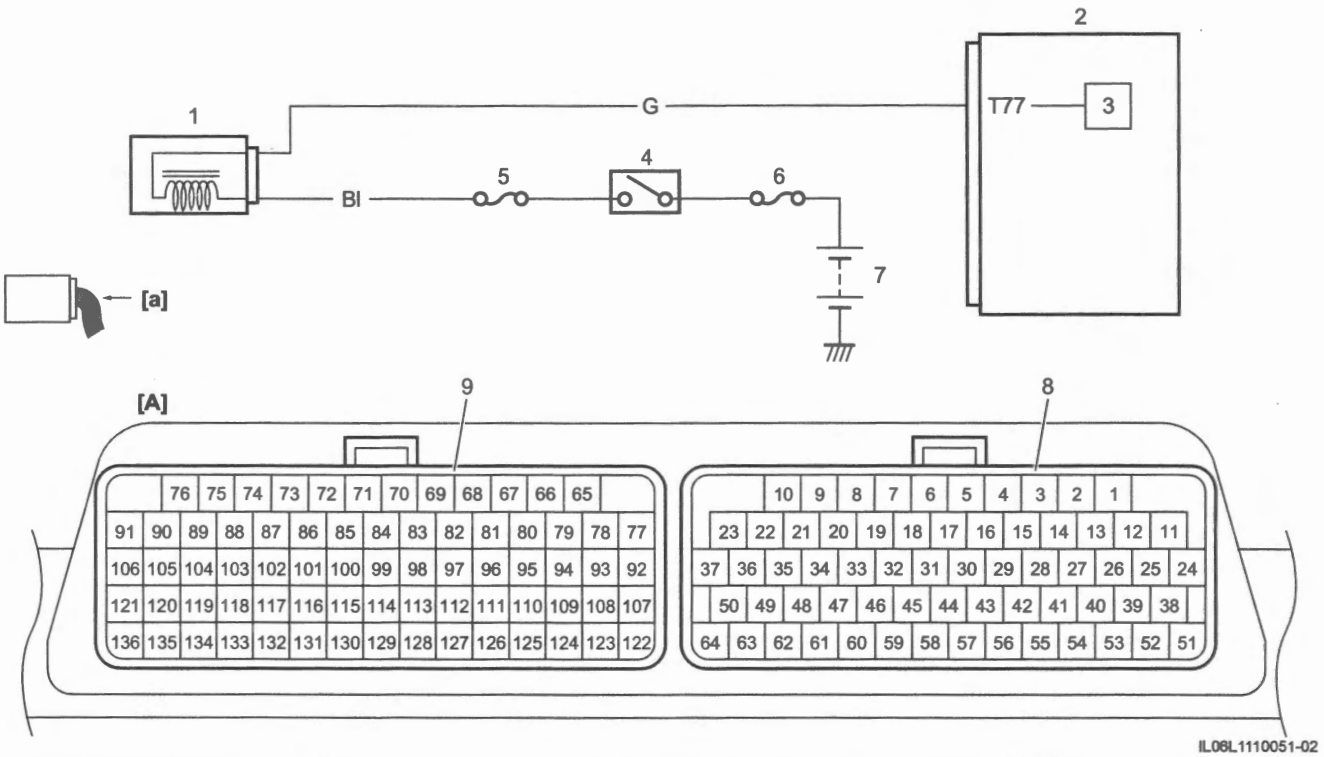

IL06L1110051-02

[A]: ECM coupler "T" (View [a])	4. Ignition switch	8. Coupler "A"
1. PAIR control solenoid valve	5. Ignition fuse (10 A)	9. Coupler "B"
2. ECM	6. Main fuse (30 A)	
3. PAIR control solenoid valve drive circuit	7. Battery	

Troubleshooting

Step 1

DTC check

1) Perform "DTC Check" (Page 1A-11).

Is DTC P0412 (C49) detected?

Yes — Go to troubleshooting for applicable DTC.

No — Go to Step 2.

Step 2

PAIR system check

1) Check the PAIR system. ☞(Page 0B-15)

Is check result OK?

Yes — Go to Step 3.

No — Repair or replace defective parts.

Step 3

PAIR control solenoid valve circuit check

1) Check the PAIR control solenoid valve power supply and drive circuits. Refer to step 1) – 2) in "Troubleshooting" under "DTC P0412 (C61)" (Page 1A-67).

Is check result OK?

Yes — Replace the ECM and inspect it again. ☞(Page 1C-2)

No — Repair or replace defective wire harness.

DTC P0412 (C61)

BENL06L21104027

DTC Detecting Condition and Trouble Area

DTC detecting condition	Trouble area
P0412 (C61): Secondary Air Injection System Switching Valve "A" Circuit PAIR control solenoid valve drive circuit is shorted to ground or open. (3 D/C detection logic)	• PAIR control solenoid valve • PAIR control solenoid valve circuit • ECM

Wiring Diagram

Refer to "Engine Control System Wiring Diagram" (Page 1A-6).

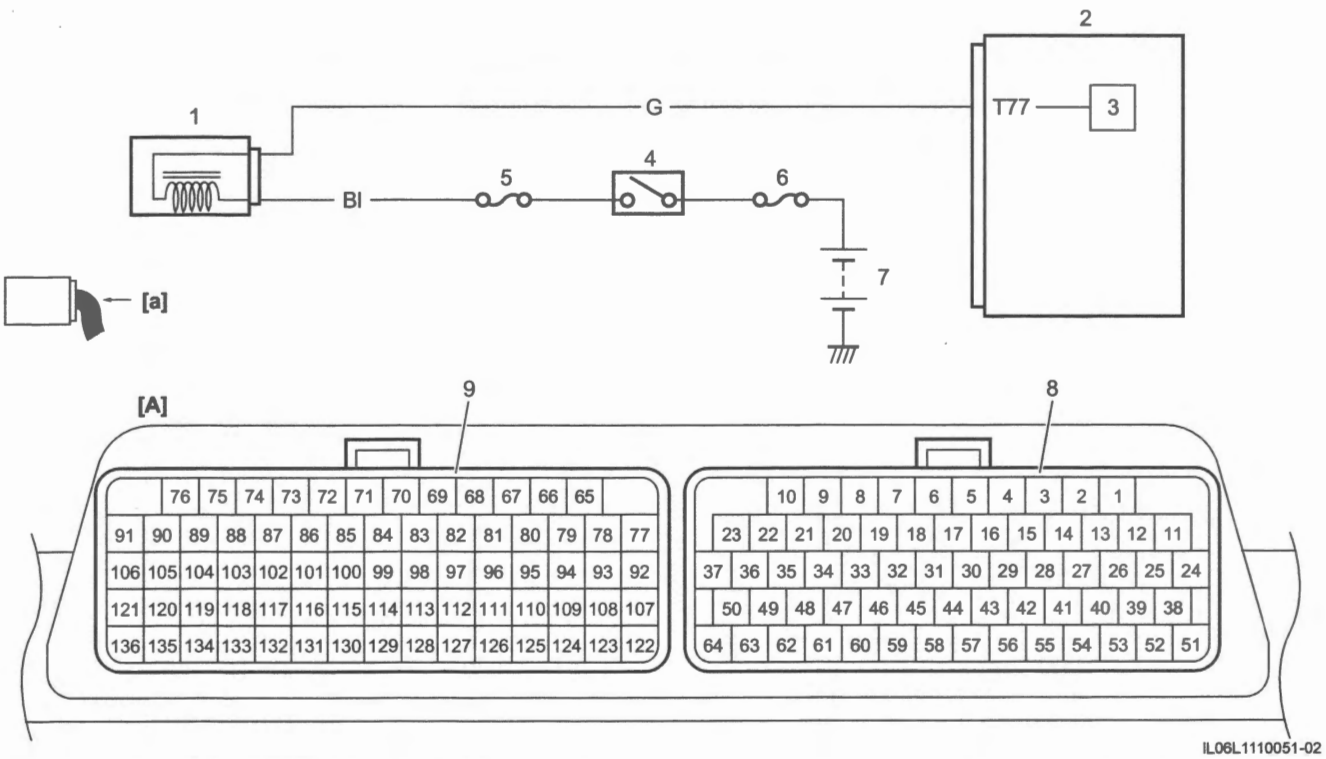

IL06L1110051-02

[A]: ECM coupler "T" (View [a])	4. Ignition switch	8. Coupler "A"
1. PAIR control solenoid valve	5. Ignition fuse (10 A)	9. Coupler "B"
2. ECM	6. Main fuse (30 A)	
3. PAIR control solenoid valve drive circuit	7. Battery	

Troubleshooting

Step 1

PAIR control solenoid valve power supply circuit check

1) Turn the ignition switch OFF.
2) Disconnect the PAIR control solenoid valve coupler. ☞(Page 1B-5)
3) Check for proper terminal connection to the PAIR control solenoid valve coupler (1).
4) If connections are OK, turn the ignition switch ON.
5) Measure the voltage between "T2" and ground.

PAIR control solenoid valve power supply voltage
[Standard]: Battery voltage

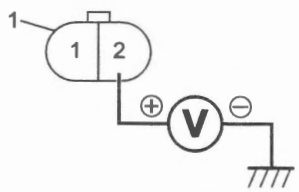

IL06L1110052-01

Is check result OK?

Yes — Go to Step 2.

No — Repair or replace the "T2" wire at the PAIR control solenoid valve coupler.

Step 2

PAIR control solenoid valve drive circuit check

1) Turn the ignition switch OFF.
2) Disconnect the ECM coupler "B". ☞(Page 1C-2)
3) Check for proper terminal connection to the ECM coupler "B".
4) If connections are OK, check the following points.
   - Resistance
     - Between "T1" at the PAIR control solenoid valve coupler (1) and "T77" at the ECM coupler "B" (2): less than 1 Ω

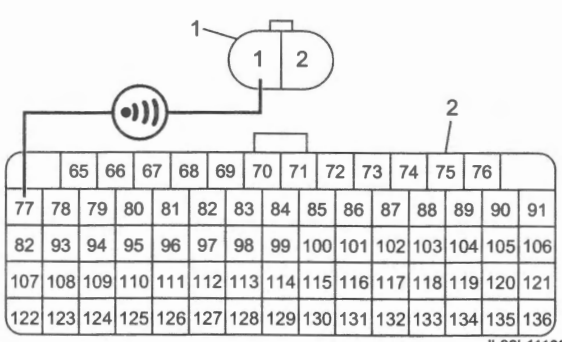

IL06L1110053-01

     - Between "T1" at the PAIR control solenoid valve coupler (1) and ground: infinity

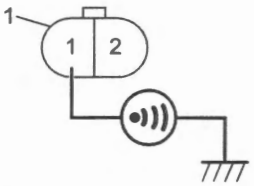

IL06L1110054-01

     - Between "T1" and "T2" at the PAIR control solenoid valve coupler (1): infinity

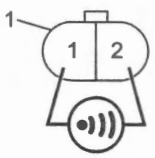

IL06L1110055-02

   - Voltage
     - Turn the ignition switch ON.
     - Between "T1" at the PAIR control solenoid valve coupler (1) and ground: approx. 0 V

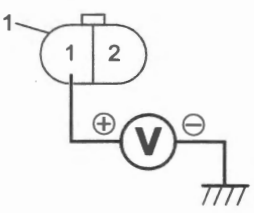

IL06L1110056-01

Is check result OK?

Yes — Go to Step 3.

No — Repair or replace the "T1" wire at the PAIR control solenoid valve coupler.

Step 3

PAIR solenoid valve resistance check

1) Turn the ignition switch OFF.
2) Measure the PAIR control solenoid valve resistance. Refer to step 4) in "PAIR Control Solenoid Valve" under "PAIR (air supply) System" in Section 0B (Page 0B-15).

Is check result OK?

Yes — Replace the ECM and inspect it again. ☞(Page 1C-2)

No — Replace the PAIR control solenoid valve. ☞(Page 1B-5)

DTC P0444 (C62)

BENL06L21104028

DTC Detecting Condition and Trouble Area

DTC detecting condition	Trouble area
P0444 (C62): Evaporative Emission System Purge Control Valve Circuit Open EVAP system purge control solenoid valve voltage is lower than 3.00 V although the EVAP system control solenoid valve is OFF. (3 D/C detection logic)	• EVAP system purge control solenoid valve • EVAP system purge control solenoid valve circuit • ECM

Wiring Diagram

Refer to "Engine Control System Wiring Diagram" (Page 1A-6).

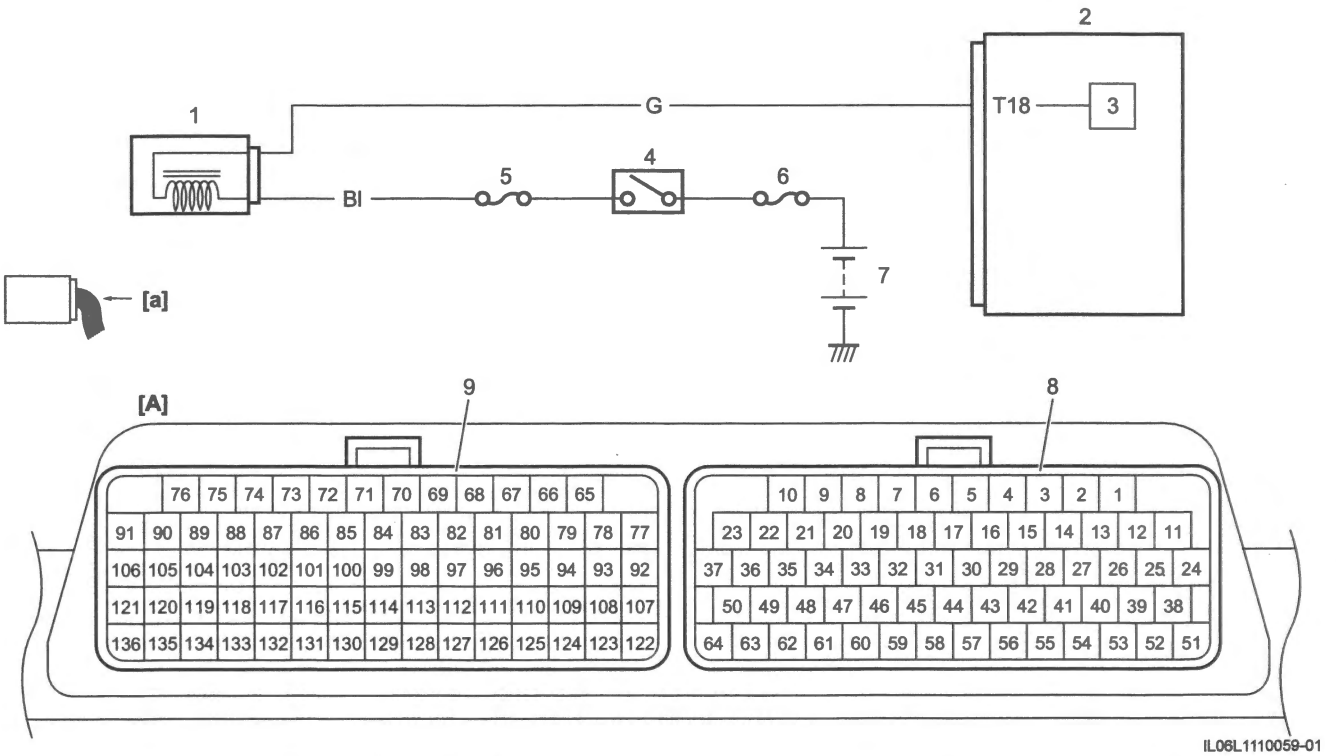

IL06L1110059-01

[A]: ECM coupler "T" (View [a])	4. Ignition switch	8. Coupler "A"
1. EVAP system purge control solenoid valve	5. Ignition fuse (10 A)	9. Coupler "B"
2. ECM	6. Main fuse (30 A)	
3. EVAP system purge control solenoid valve drive circuit	7. Battery	

Troubleshooting

Step 1

EVAP system purge control solenoid valve power supply circuit check

1) Turn the ignition switch OFF.
2) Disconnect the EVAP system purge control solenoid valve coupler. ☞(Page 1B-6)
3) Check for proper terminal connection to the EVAP system purge control solenoid valve coupler (1).
4) If connections are OK, turn the ignition switch ON.
5) Measure the voltage between "T1" and ground.

EVAP system purge control solenoid valve power supply voltage
[Standard]: Battery voltage

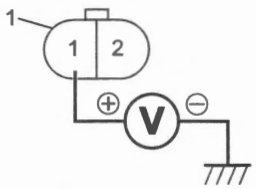

IL06L1110057-01

Is check result OK?

Yes — Go to Step 2.

No — Repair or replace the "T1" wire at the EVAP system purge control solenoid valve coupler.

Step 2

EVAP system purge control solenoid valve drive circuit check

1) Turn the ignition switch OFF.
2) Disconnect the ECM coupler "A". ☞(Page 1C-2)
3) Check for proper terminal connection to the ECM coupler "A".
4) If connections are OK, check the following points.
   - Resistance
     - Between "T2" at the EVAP system purge control solenoid valve coupler (1) and "T18" at the ECM coupler "A" (2): less than 1 Ω

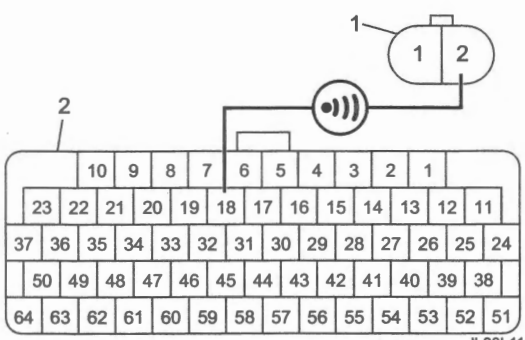

IL06L1110060-01

     - Between "T2" at the EVAP system purge control solenoid valve coupler (1) and ground: infinity

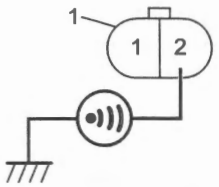

IL06L1110061-01

     - Between "T2" and "T1" at the EVAP system purge control solenoid valve coupler (1): infinity

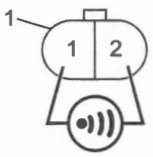

IL06L1110055-02

   - Voltage
     - Turn the ignition switch ON.
     - Between "T2" at the EVAP system purge control solenoid valve coupler (1) and ground: approx. 0 V

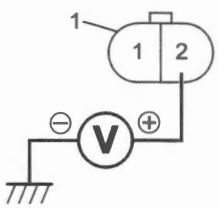

IL06L1110062-01

Is check result OK?

Yes — Go to Step 3.

No — Repair or replace the "T2" wire at the EVAP system purge control solenoid valve coupler.

Step 3

EVAP system purge control solenoid valve resistance check

1) Turn the ignition switch OFF.
2) Measure the EVAP system purge control solenoid valve resistance. Refer to step 1) in "EVAP System Purge Control Solenoid Valve" under "Evaporative emission control system" in Section 0B (Page 0B-12).

Is check result OK?

Yes — Replace the ECM and inspect it again. ☞(Page 1C-2)

No — Replace the EVAP system purge control solenoid valve. ☞(Page 1B-6)

DTC P0480 (C60)

BENL06L21104029

DTC Detecting Condition and Trouble Area

DTC detecting condition	Trouble area
P0480 (C60): Fan 1 Control Circuit Cooling fan relay drive circuit is shorted to ground or open. (3 D/C detection logic)	• Cooling fan relay • Cooling fan relay circuit • ECM

Wiring Diagram

Refer to "Engine Control System Wiring Diagram" (Page 1A-6).

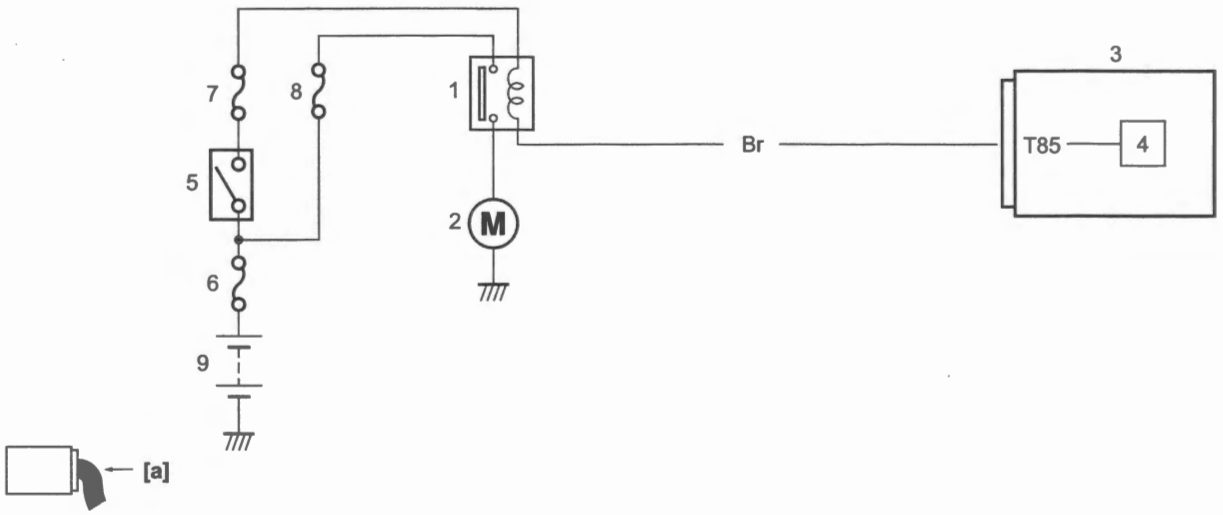

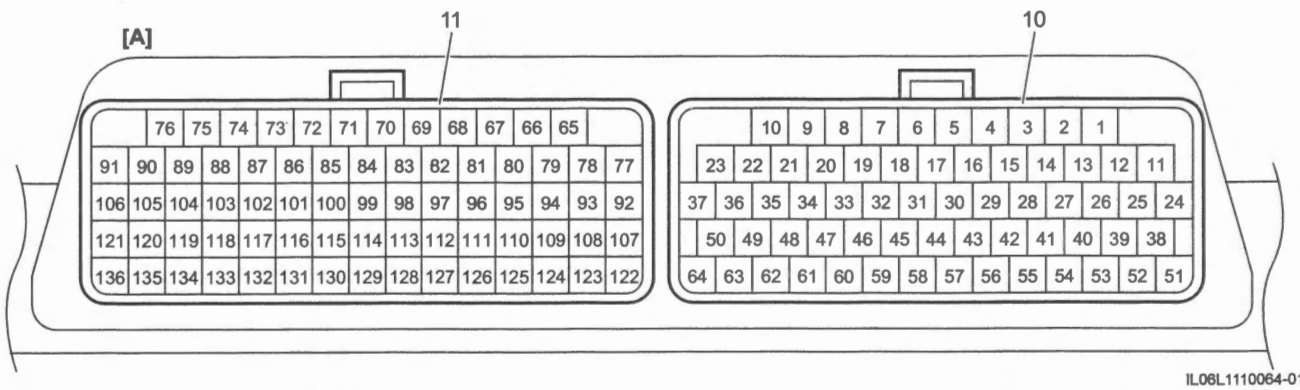

IL06L1110064-01

[A]: ECM coupler "T" (View [a])	4. Cooling fan relay drive circuit	8. Cooling fan fuse (15 A)
1. Cooling fan relay	5. Ignition switch	9. Battery
2. Cooling fan	6. Main fuse (30 A)	10. Coupler "A"
3. ECM	7. Ignition fuse (10 A)	11. Coupler "B"

Troubleshooting

Step 1

Cooling fan relay power supply circuit check

1) Turn the ignition switch OFF.
2) Disconnect the relay box coupler (1). ☞(Page 9A-42).
3) Check for proper terminal connection to the relay box coupler.
4) If connections are OK, turn the ignition switch ON.
5) Measure the voltage between "T2" at the relay box coupler (1) and ground.

Cooling fan relay power supply voltage
[Standard]: Battery voltage

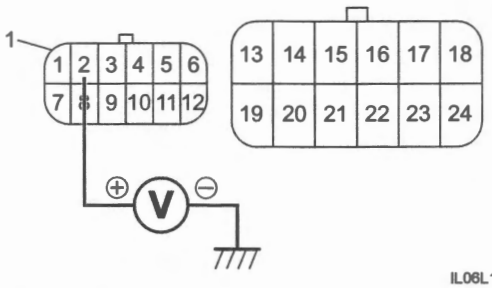

IL06L1110063-01

Is check result OK?

Yes — Go to Step 2.

No — Repair or replace the "T2" wire at the relay box coupler.

Step 2

Cooling fan relay check

1) Check the cooling fan relay. ☞(Page 1F-12)

Is check result OK?

Yes — Go to Step 3.

No — Replace the relay box. ☞(Page 9A-42)

Step 3

Cooling fan relay drive circuit check

1) Turn the ignition switch OFF.
2) Disconnect the ECM coupler "B". ☞(Page 1C-2)
3) Check for proper terminal connection to the ECM coupler "B".
4) If connections are OK, check the following points.
   - Resistance
     - Between "T8" at the relay box coupler (1) and "T85" at the ECM coupler "B"(2): less than 1 Ω

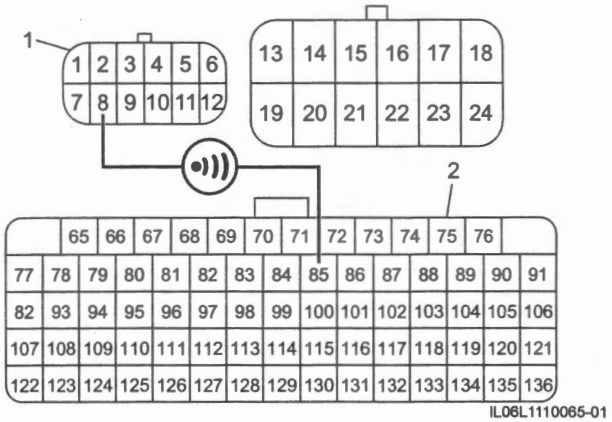

IL06L1110065-01

     - Between "T8" at the relay box coupler (1) and ground: infinity

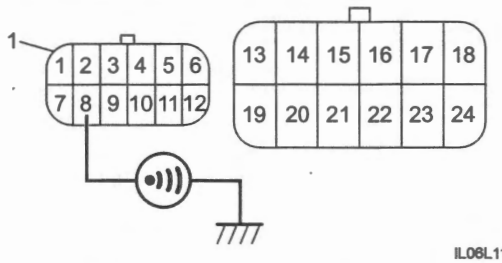

IL06L1110066-01

     - Between "T8" and other terminal (2) at relay box coupler (1): Infinity

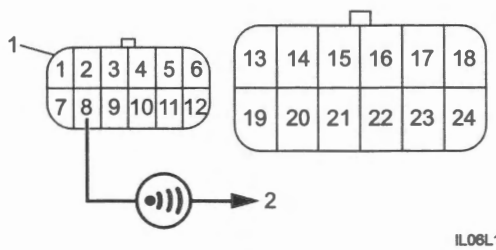

IL06L1110067-01

   - Voltage
     - Turn the ignition switch ON.
     - Between "T8" at the relay box coupler (1) and ground: approx. 0 V

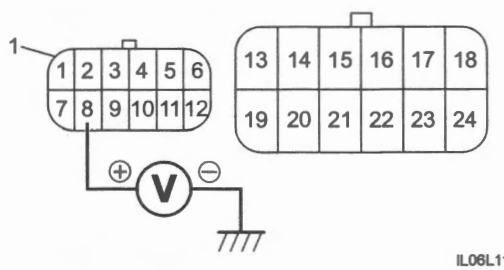

IL06L1110068-01

Is check result OK?

Yes — Replace the ECM and inspect it again. ☞(Page 1C-2)

No — Repair or replace the "T8" wire at the relay box coupler.

DTC P0500 (C16)

BENL06L21104030

DTC Detecting Condition and Trouble Area

DTC detecting condition	Trouble area
P0500 (C16): Vehicle Speed Sensor "A" Any of the following conditions is met. • Front wheel speed is 0 km/h (0 mile/h) for a few seconds or more, at motorcycle deceleration. • Front wheel speed is 0 km/h (0 mile/h) for a few sec or more although the rear wheel speed is higher than 10km/h (6 mile/h). • Front wheel speed signal does not become stable (3 D/C detection logic)	• Front wheel speed sensor • Front wheel speed sensor circuit • ABS control unit / HU • ECM

Wiring Diagram

Refer to "Engine Control System Wiring Diagram" (Page 1A-6).

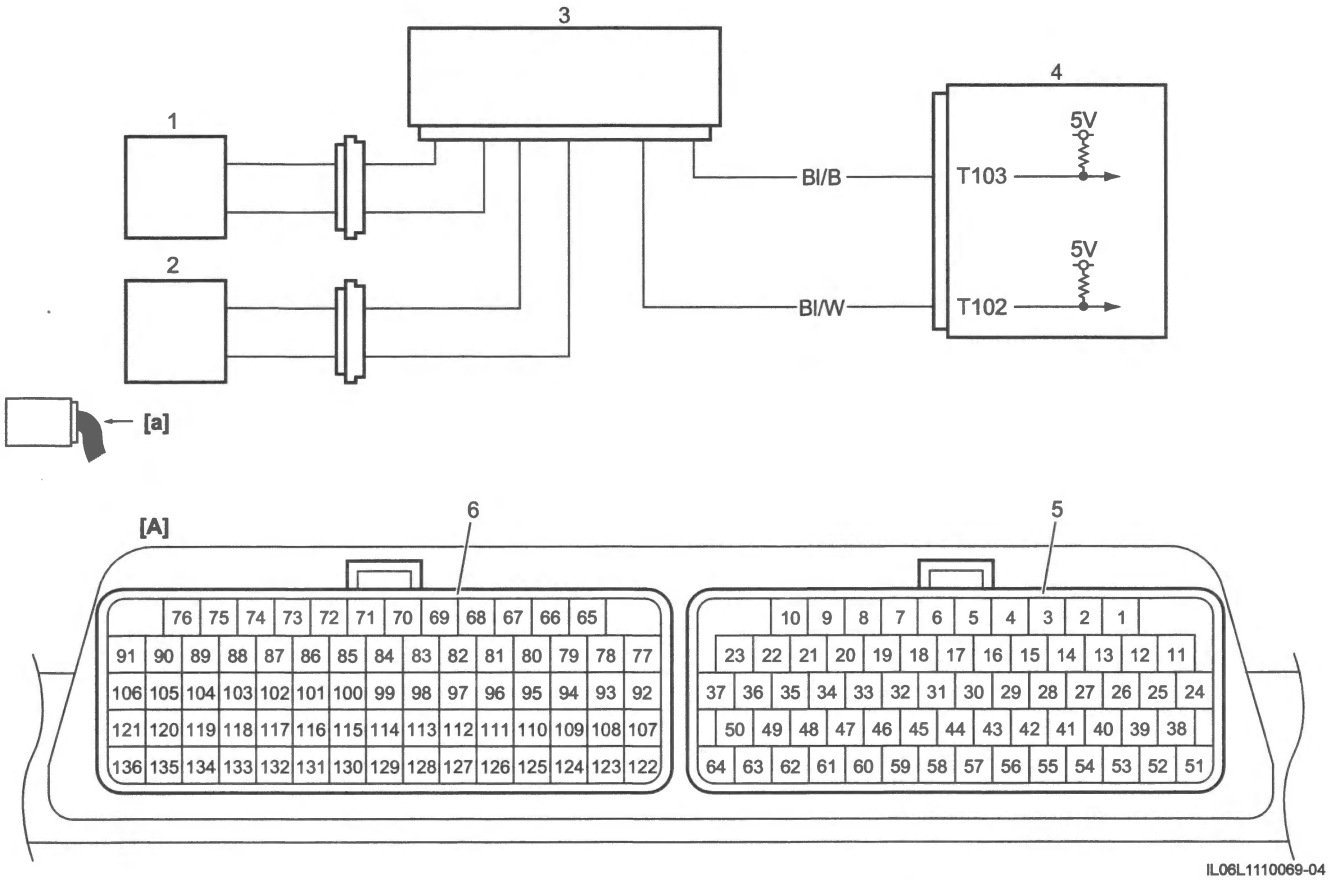

IL06L1110069-04

[A]: ECM coupler "T" (View [a])	3. ABS control unit / HU	8. Coupler "B"
1. Front wheel speed sensor	5. ECM	
2. Rear wheel speed sensor	6. Coupler "A"	

Troubleshooting

Step 1

ABS DTC check.

1) Check that DTC is detected in ABS. ☞(Page 4E-14)

Is the DTC detected?

Yes — Go to troubleshooting for DTCs. Refer to "DTC Table" in Section 4E (Page 4E-19).

No — Go to Step 2.

Step 2

Speed sensor signal circuit check (From ABS control unit to ECM)

1) Turn the ignition switch OFF.
2) Disconnect the ECM coupler "B" and ABS control unit / HU coupler.
   - ECM coupler "B": ☞(Page 1C-2)
   - ABS control unit / HU coupler: ☞(Page 4E-54)
3) Check for proper terminal connection to the ECM coupler "B" and ABS control unit / HU coupler.
4) If connections are OK, check the following points.
   - Resistance
     - **Without motion track brake system:** Between "T11" at the ABS control unit / HU coupler (1) and "T103" at the ECM coupler "B" (2): less than 1 Ω

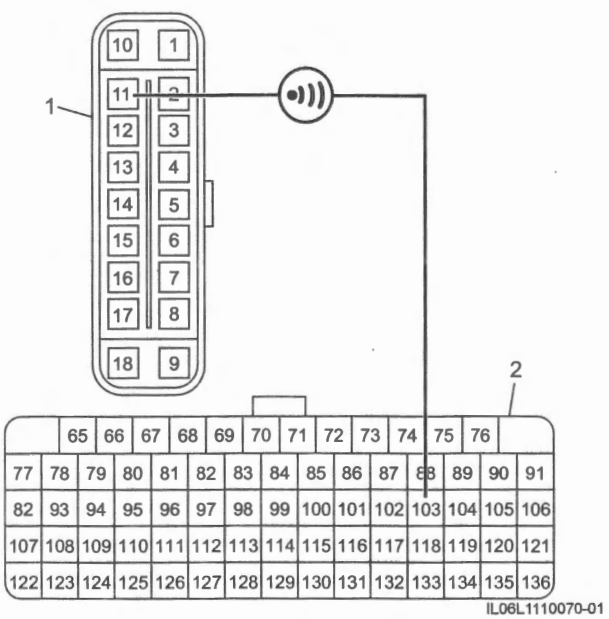

     - **With motion track brake system:** Between "T19" at the ABS control unit / HU coupler (1) and "T103" at the ECM coupler "B" (2): less than 1 Ω

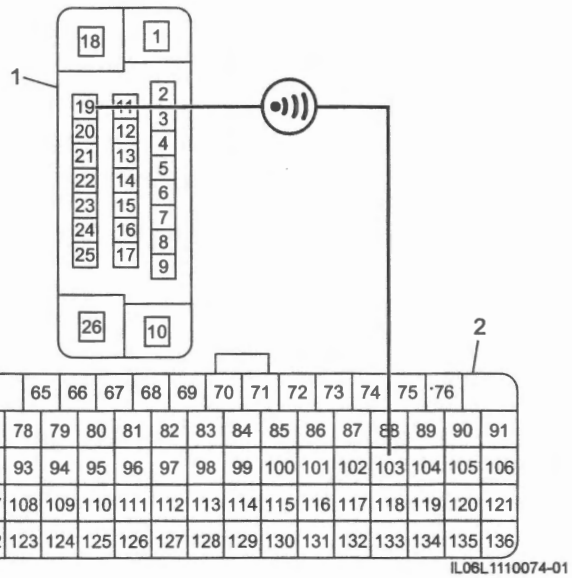

     - Between "T103" at the ECM coupler "B" (1) and ground: infinity

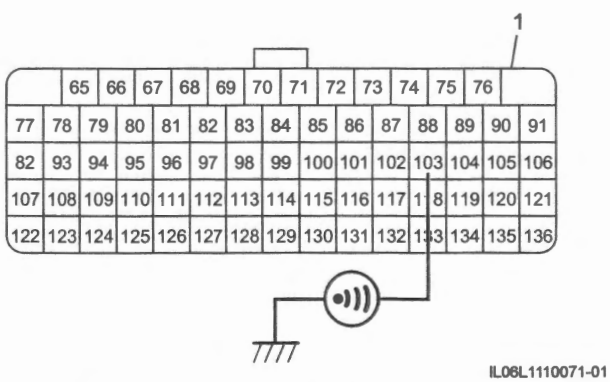

     - Between "T103" and other terminal (1) at ECM coupler "B" (2): infinity

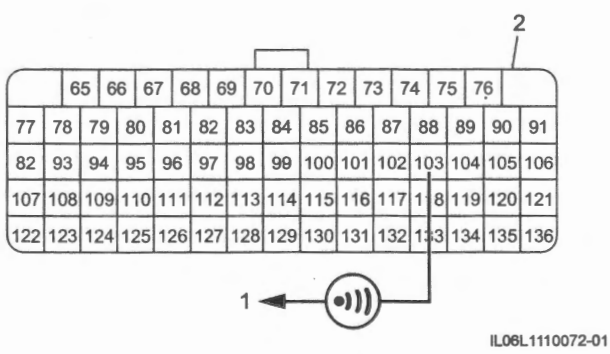

- Voltage
  - Turn the ignition switch ON.
  - Between "T103" at the ECM coupler "B" (1) and ground: approx. 0 V

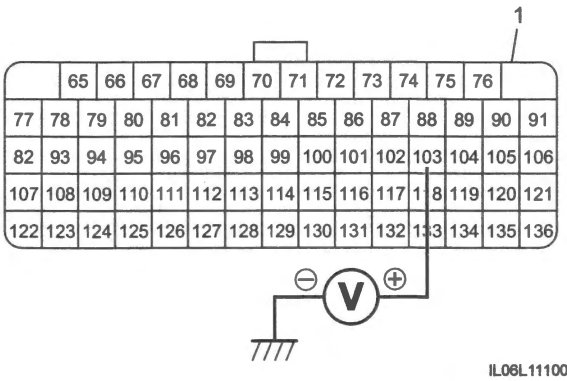

IL06L1110073-01

Is check result OK?

Yes — Replace the ECM and inspect it again. ☞(Page 1C-2)

If this DTC is detected again, replace the ABS control unit / HU and recheck DTC.

No — Repair or replace the "T103" wire at the ECM coupler "B".

DTC P050B (C84)

BENL06L21104031

DTC Detecting Condition and Trouble Area

DTC detecting condition	Trouble area
P050B (C84): Cold Start Ignition Timing Performance Ignition timing for catalyst warming up is out of the specified range. (3 D/C detection logic)	• ECM

Troubleshooting

Step 1

DTC recheck

1) Perform reprogramming of ECM. Referring to the SDS-II operation manual for further details.
2) Perform "DTC Check" (Page 1A-11) and recheck DTC.

Is DTC P050B (C84) still detected?

Yes — Replace the ECM and inspect it again. ☞(Page 1C-2)

No — End.

DTC P0602

BENL06L21104032

DTC Detecting Condition and Trouble Area

DTC detecting condition	Trouble area
P0602: Control Module Programming Error ECM internal failure (data programming error). (1 D/C detection logic)	• Reprogramming failure of ECM • ECM

Wiring Diagram

Refer to "Engine Control System Wiring Diagram" (Page 1A-6).

Troubleshooting

Step 1

ECM reprogramming check

Was reprogramming of ECM executed?

Yes	Execute reprogramming of ECM correctly once again. If this DTC is detected again, replace the ECM. ☞(Page 1C-2)
No	Execute reprogramming of ECM.

DTC P0607 (C68)

BENL06L21104033

NOTE

When DTC P0607 (C68) is detected, perform the Troubleshooting of DTC P0607 (C68) first even if other DTC is detected.

DTC Detecting Condition and Trouble Area

DTC detecting condition	Trouble area
P0607 (C68): Control Module Performance ECM internal processor failure. (1 D/C detection logic)	• ECM coupler connection • ECM

Troubleshooting

Step 1

ECM coupler connection check

1) Turn the ignition switch OFF.
2) Disconnect the ECM couplers. ☞(Page 1C-2)
3) Check for proper terminal connection to the ECM couplers.
4) If connections are OK, reconnect the ECM couplers.
5) Perform "DTC Check" (Page 1A-11) and check DTC

Is DTC P0607 (C68) still detected?

Yes	Replace the ECM and inspect it again. ☞(Page 1C-2)
No	End.

DTC P0830 (C72)

BENL06L21104034

DTC Detecting Condition and Trouble Area

DTC detecting condition	Trouble area
P0830 (C72): Clutch Pedal Switch "A" Circuit Clutch lever position switch is continuity ON for more than specified time with motorcycle running. (3 D/C detection logic)	• Clutch lever position switch • Clutch lever position switch circuit • Left handle switch • ECM

Wiring Diagram

Refer to "Engine Control System Wiring Diagram" (Page 1A-6).

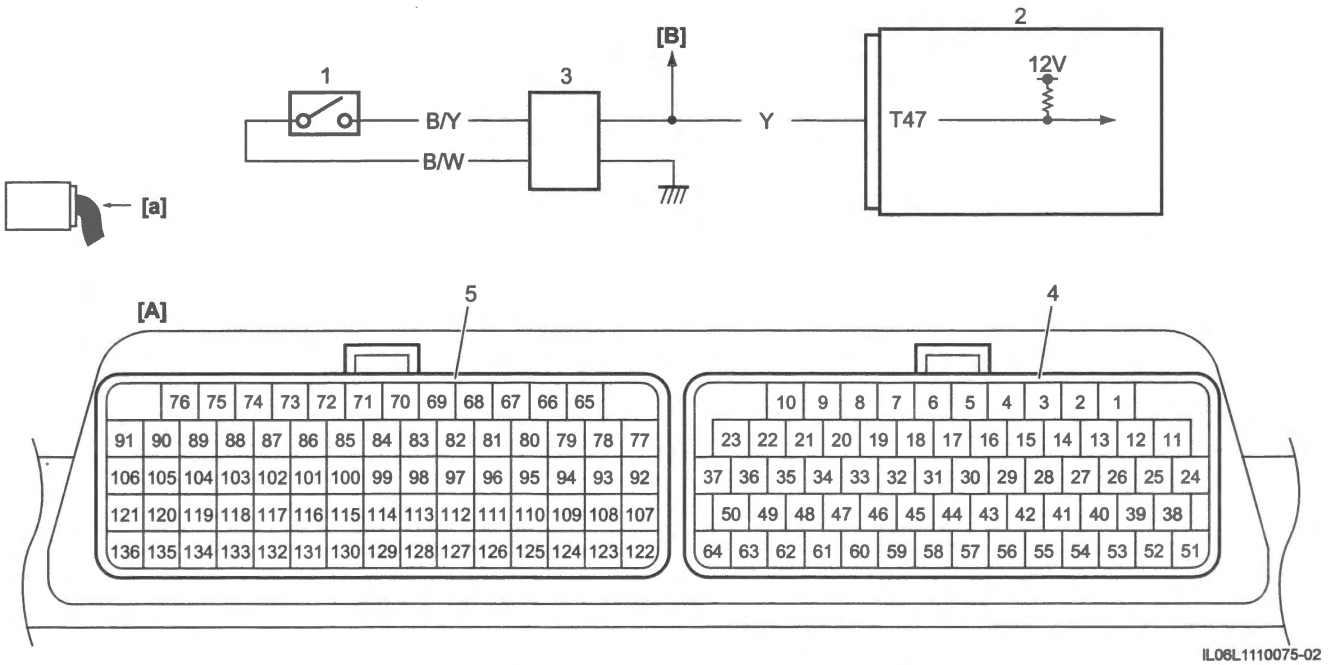

IL06L1110075-02

[A]: ECM coupler "T" (View [a])	2. ECM	5. Coupler "B"
[B]: To starter sub relay	3. Left handle switch	
1. Clutch lever position switch	4. Coupler "A"	

Troubleshooting

Step 1

Clutch lever position switch check

1) Turn the ignition switch OFF.
2) Check the clutch lever position switch. ☞(Page 5C-5)

Is check result OK?

Yes — Go to Step 2.

No — Replace the clutch lever position switch. ☞(Page 5C-9)

Step 2

Clutch lever position switch signal circuit check (left handle switch)

1) Check for proper terminal connection to the clutch lever position switch connectors or coupler.
2) If connections are OK, disconnect the left handle switch couplers. ☞(Page 6B-7)
3) Check for proper terminal connection to the left handle switch couplers.
4) If connections are OK, check the resistance.
   - Between "T1" (B/Y wire) at the clutch lever position switch connector (1) and "T2" at the left handle switch coupler (8P) (2): less than 1 Ω

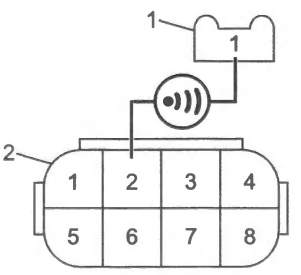

IL06L1110082-01

- Between "T1" (B/Y wire) at the clutch lever position switch connector (1) and ground: infinity

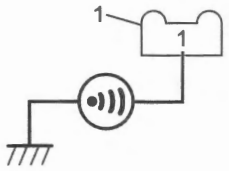

IL06L1110076-01

- Between "T1" (B/Y wire) at the clutch lever position switch connector (1) and "T1" (B/W wire) at the clutch lever position switch connector (2): infinity

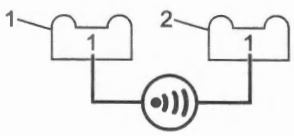

IL06L1110077-01

Is check result OK?

Yes — Go to Step 3.

No — Repair the left handle switch lead wire or replace the left handle switch. ☞(Page 6B-7)

Step 3

Clutch lever position switch signal circuit check (main harness)

1) Disconnect the ECM coupler "A" and relay box coupler.
   - ECM coupler: ☞(Page 1C-2)
   - Relay box coupler: ☞(Page 9A-42)
2) Check for proper terminal connection to the ECM coupler "A".
3) If connections are OK, check the resistance.
   - Between "T2" at the left handle switch coupler (8P) (1) and "T47" at the ECM coupler "A" (2): less than 1 Ω

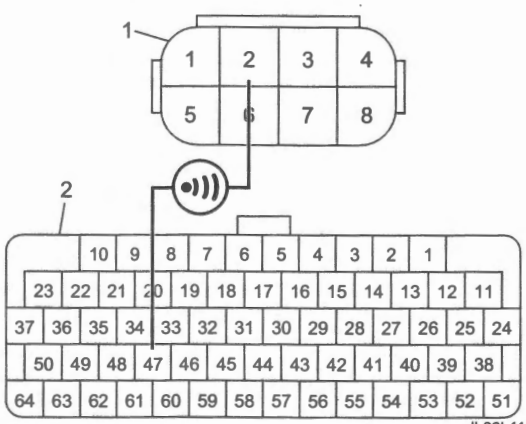

IL06L1110084-01

- Between "T2" at the left handle switch coupler (8P) (1) and ground: infinity

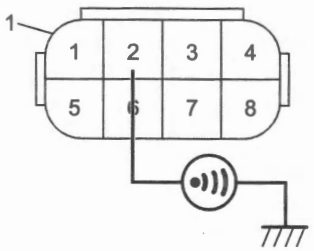

IL06L1110080-01

- Between "T2" at the left handle switch coupler (8P) (1) and "T4" at the left handle switch coupler (6P) (2): infinity

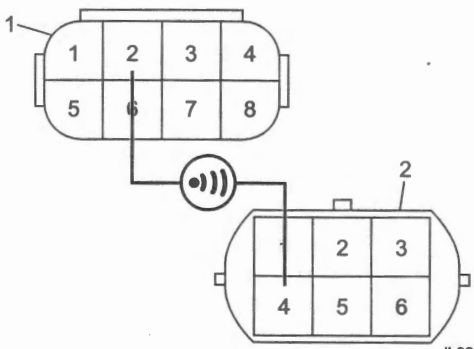

IL06L1110081-01

Is check result OK?

Yes — Replace the ECM and inspect it again. ☞(Page 1C-2)

No — Repair or replace the "T2" wire at the left handle switch coupler (8P).

DTC P0850 (C81)

BENL06L21104035

DTC Detecting Condition and Trouble Area

DTC detecting condition	Trouble area
P0850 (C81): Park / Neutral Switch Input Circuit Neutral switch is continuity ON for more than specified time with motorcycle running. (3 D/C detection logic)	• GP switch • GP switch circuit • ECM

Wiring Diagram

Refer to "Engine Control System Wiring Diagram" (Page 1A-6).

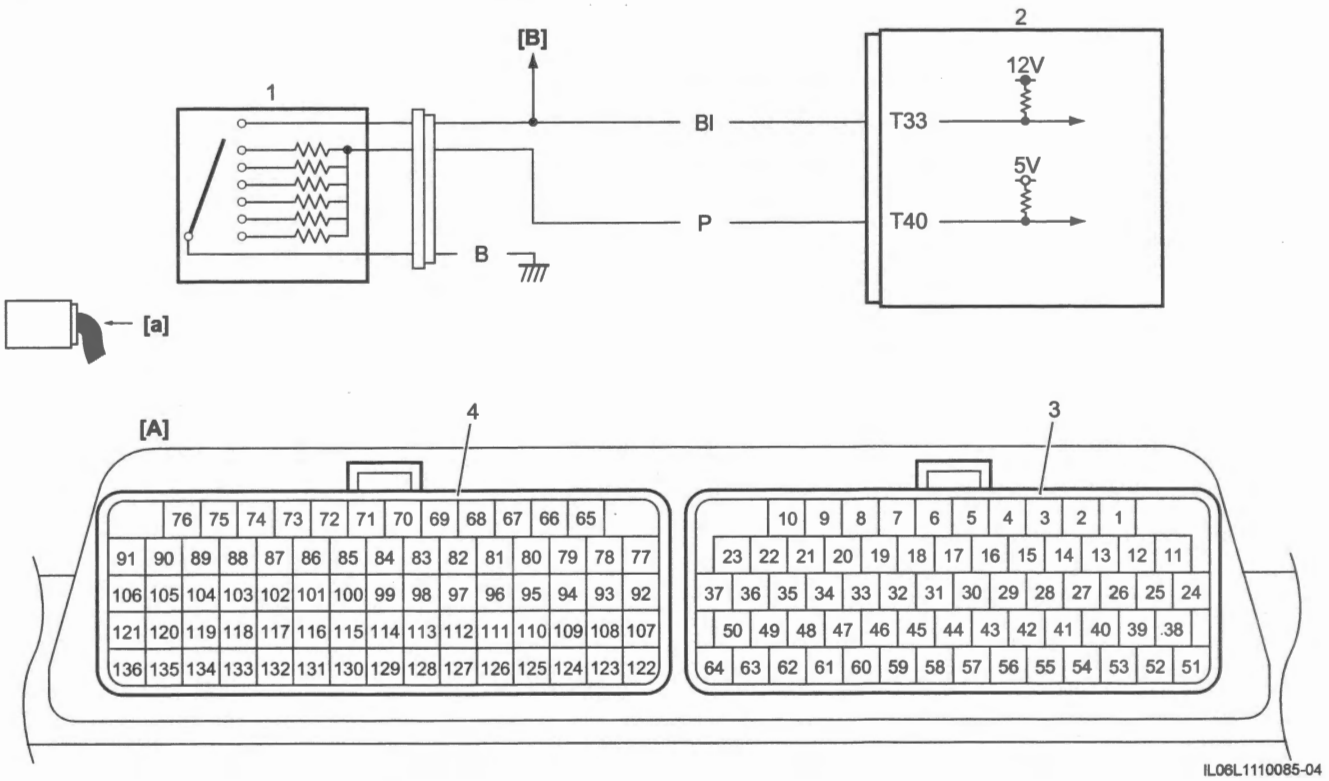

IL06L1110085-04

[A]: ECM coupler "T" (View [a])	1. GP switch	3. Coupler "A"
[B]: To combination meter and starter sub relay	2. ECM	4. Coupler "B"

Troubleshooting

Step 1

GP switch (neutral) signal circuit check

1) Disconnect the GP switch coupler, ECM coupler "A", combination meter coupler and relay box coupler.
   - GP switch coupler: ☞(Page 5B-12)
   - ECM coupler: ☞(Page 1C-2)
   - Combination meter coupler: ☞(Page 9C-16)
   - Relay box coupler. ☞(Page 9A-42)
2) Check for proper terminal connection to the GP switch coupler and ECM coupler "A".
3) If connections are OK, check the resistance.
   - Between "T1" at the GP switch coupler (1) and "T33" at the ECM coupler "A" (2): less than 1 Ω

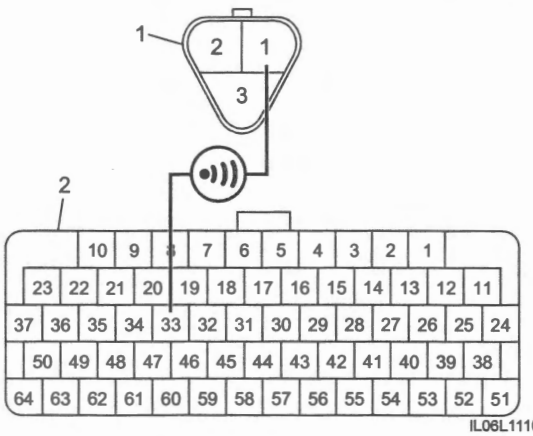

IL06L1110086-01

   - Between "T1" at the GP switch coupler (1) and ground: infinity

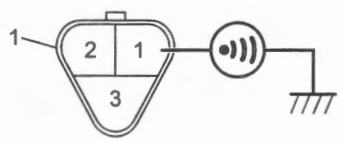

IL06L1110087-01

   - Between "T1" and other terminal at the GP switch coupler (1): infinity

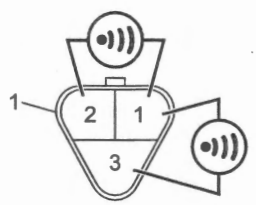

IL06L1110088-01

Is check result OK?

Yes	Go to Step 2.
No	Repair or replace the defective wire harness.

Step 2

GP switch check

1) Turn the ignition switch OFF.
2) Check the neutral switch of GP switch. Refer to "Neutral Switch" under "GP Switch Inspection" in Section 5B (Page 5B-11)

Is check result OK?

Yes	Replace the ECM and inspect it again. ☞(Page 1C-2)
No	Replace the GP switch. ☞(Page 5B-12)

DTC P0915 / P0916 (C31)

BENL06L21104036

DTC Detecting Condition and Trouble Area

DTC detecting condition	Trouble area
P0915 (C31): GP Sensor Circuit Range/ Performance Difference between measured gear position and estimated gear position is out of the specified range. (3 D/C detection logic)	• GP switch • GP switch circuit • ECM
P0916 (C31): GP Sensor Circuit Low Gear position signal voltage is lower than 0.2 V. (3 D/C detection logic)	

Wiring Diagram

Refer to "Engine Control System Wiring Diagram" (Page 1A-6).

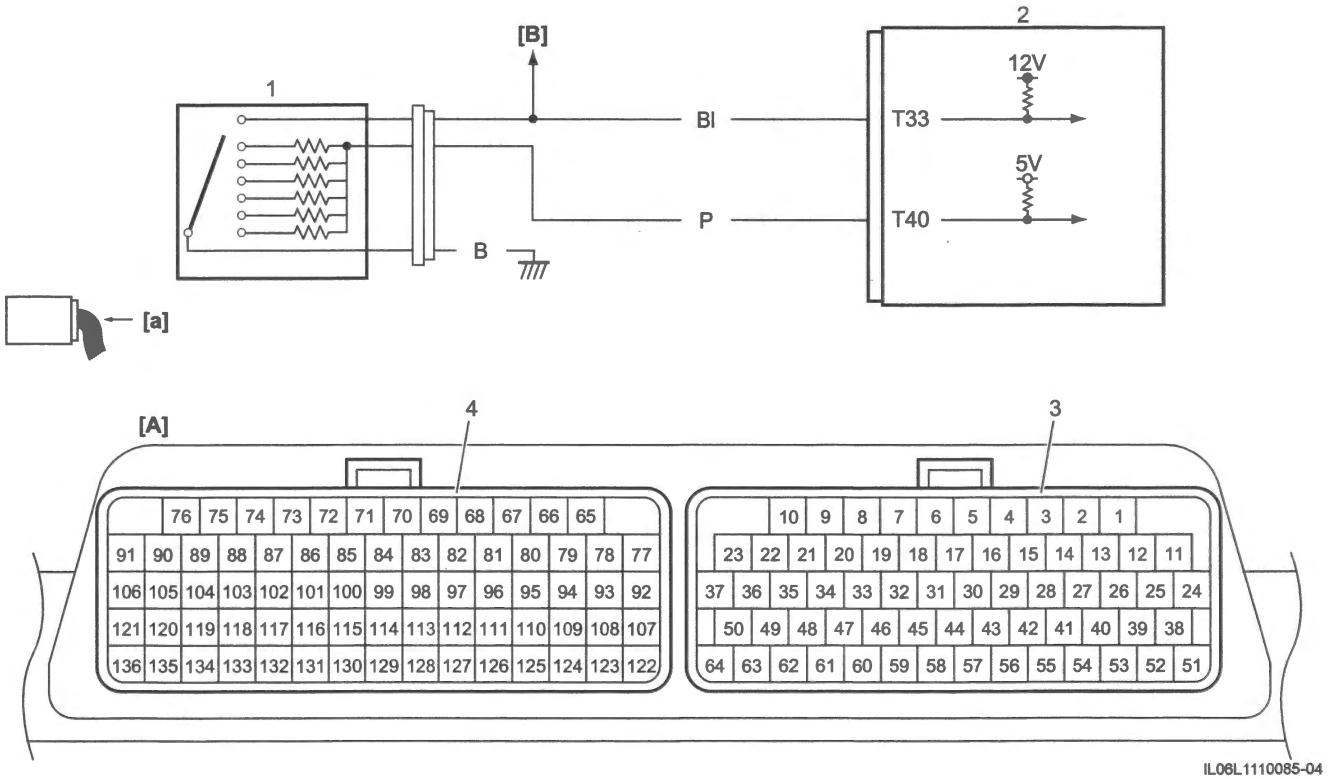

IL06L1110085-04

[A]: ECM coupler "T" (View [a])	1. GP switch	3. Coupler "A"
[B]: To combination meter and starter sub relay	2. ECM	4. Coupler "B"

Troubleshooting

Step 1

GP switch (gearshift lever position) power supply voltage check

1) Turn the ignition switch OFF.
2) Disconnect the GP switch coupler. ☞(Page 5B-12)
3) Check for proper terminal connection to the GP switch coupler (1).
4) If connections are OK, turn the ignition switch ON.
5) Measure the voltage between the "T2" and ground.
6) If OK, measure the voltage between the "T2" and "T3"wire.

GP switch (gearshift lever position) power supply voltage
[Standard]: 4.5 – 5.5 V

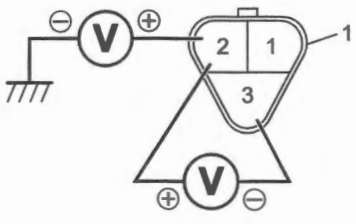

IL06L1110092-01

Is check result OK?

Yes Go to Step 3.

No Go to Step 2.

Step 2

GP switch (gearshift lever position) signal circuit check

1) Turn the ignition switch OFF.
2) Disconnect the ECM coupler "A". ☞(Page 1C-2)
3) Check for proper terminal connection to the ECM coupler "A".
4) If connections are OK, check the following points.
   - Resistance
     - Between "T2" at the GP switch coupler (1) and "T40" at the ECM coupler "A" (2): less than 1 Ω
     - Between "T3" at the GP switch coupler and "ground: less than 1 Ω

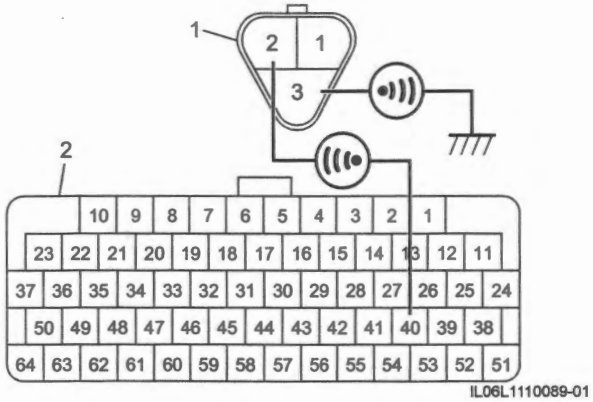

IL06L1110089-01

- Between "T2" at the GP switch coupler (1) and ground: infinity
- Between "T2" and other terminal at the GP switch coupler (1): infinity

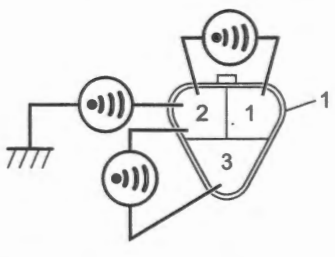

IL06L1110090-01

- Voltage
  - Turn the ignition switch ON.
  - Between "T2" at the GP switch coupler (1) and ground: approx. 0 V

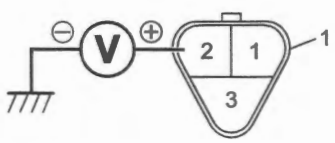

IL06L1110091-01

Is check result OK?

Yes Replace the ECM and inspect it again. ☞(Page 1C-2)

No Repair or replace the defective wire harness.

Step 3

GP switch check

1) Turn the ignition switch OFF.
2) Check the neutral switch of GP switch. Refer to "Neutral Switch" under "GP Switch Inspection" in Section 5B (Page 5B-11)

Is check result OK?

Yes Replace the ECM and inspect it again. ☞(Page 1C-2)

No Replace the GP switch. ☞(Page 5B-12)

DTC P1105 / P1106 / P1107 (C17)

BENL06L21104037

DTC Detecting Condition and Trouble Area

DTC detecting condition	Trouble area
P1105 (C17): Manifold Absolute Pressure / Barometric Pressure Circuit Bank 2 IAP sensor #2 output voltage is higher than 4.80 V. (3 D/C detection logic)	• Vacuum passage between throttle body and IAP sensor #2 • IAP sensor #2 • IAP sensor #2 circuit • ECM
P1106 (C17): Manifold Absolute Pressure / Barometric Pressure Circuit Range / Performance Bank2 Any of the following conditions is met. • IAP sensor #2 vacuum hose has come off. • Measured IAP sensor #2 output voltage is out of the specified range. (3 D/C detection logic)	
P1107 (C17): Manifold Absolute Pressure / Barometric Pressure Circuit Low Bank2 IAP sensor #2 output voltage is lower than 0.10 V. (3 D/C detection logic)	

Wiring Diagram

Refer to "Engine Control System Wiring Diagram" (Page 1A-6).

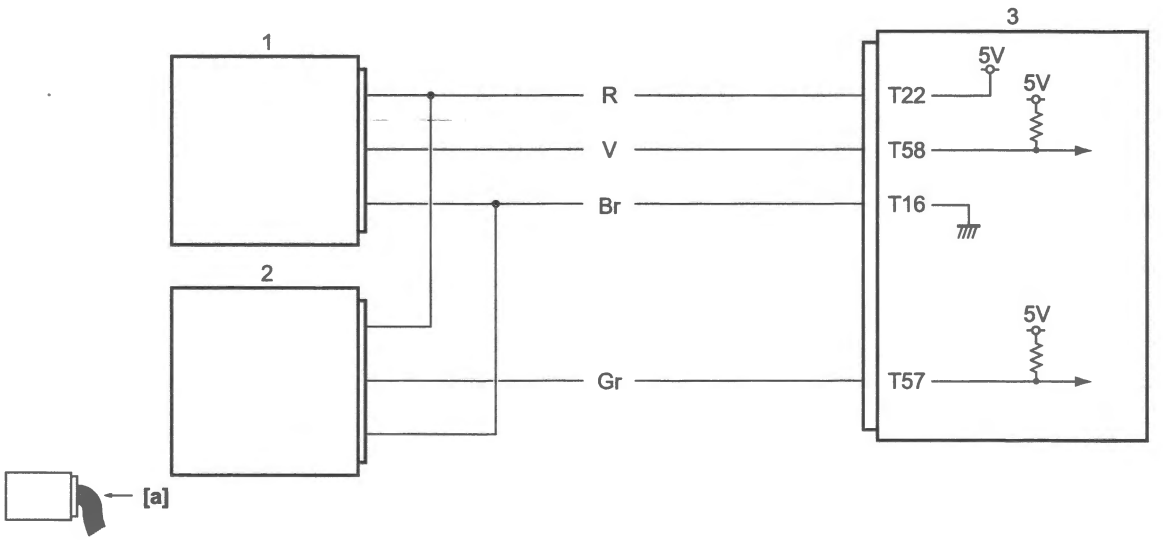

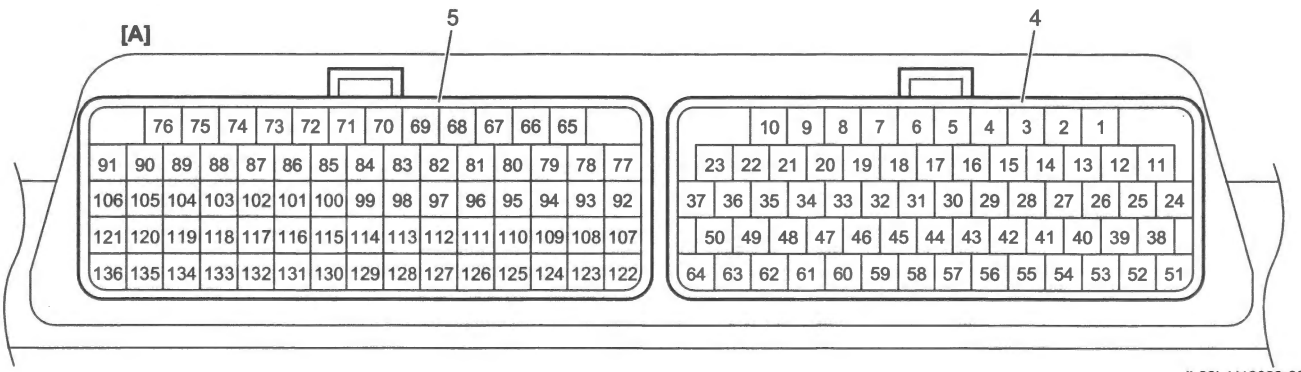

IL06L1110006-03

[A]: ECM coupler "T" (View [a])	2. IAP sensor #2	4. Coupler "A"
1. IAP sensor #1	3. ECM	5. Coupler "B"

Troubleshooting

NOTE

When DTC P1106 (C17) is not detected, start with Step 2.

Step 1

IAP sensor vacuum hose check

- Check that the IAP sensor vacuum hose is connected correctly. ☞(Page 1D-3)
- Check the IAP sensor vacuum hose for wear and damage.

Is check result OK?

Yes — Go to Step 2.

No — Repair or replace the IAP sensor vacuum hose.

Step 2

IAP sensor #2 power supply circuit check

1) Turn the ignition switch OFF.
2) Disconnect the IAP sensor #2 coupler. ☞(Page 1C-4)
3) Check for proper terminal connection to the IAP sensor #2 coupler (1).
4) If connections are OK, turn the ignition switch ON.
5) Measure the voltage between the "T2" and "T1".

IAP sensor #2 power supply voltage
[Standard]: 4.5 – 5.5 V

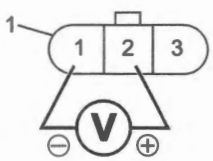

IL06L1110007-03

Is check result OK?

Yes — Go to Step 3.

No — Go to Step 2.

Step 3

IAP sensor #2 ground circuit check

1) Measure the voltage between the "T2" at the IAP sensor #2 coupler (1) and ground.

IAP sensor #2 power supply voltage
[Standard]: 4.5 – 5.5 V

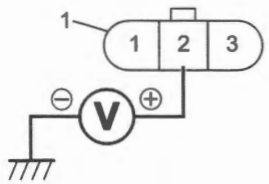

IL06L1110008-03

Is check result OK?

Yes — Repair or replace the "T1" wire at the IAP sensor #2 coupler.

No — Repair or replace the "T2" wire at the IAP sensor #2 coupler.

Step 4

IAP sensor #2 signal circuit check

1) Turn the ignition switch OFF.
2) Disconnect the ECM coupler "A". ☞(Page 1C-2)
3) Check for proper terminal connection to the ECM coupler "A".
4) If connections are OK, check the following points.
   - Resistance
     – Between "T3" at the IAP sensor #2 coupler (1) and "T57" at the ECM coupler "A" (2): less than 1 Ω

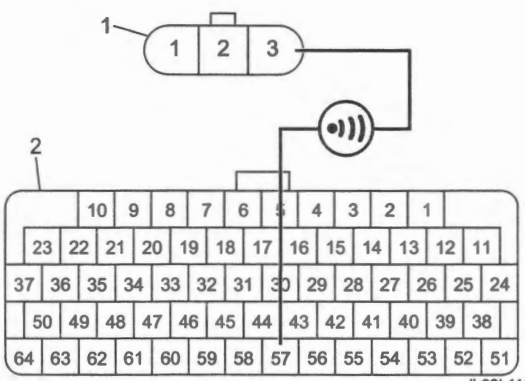

IL06L1110093-01

     – Between "T3" at the IAP sensor #2 coupler (1) and ground: infinity

– Between "T3" and other terminal at IAP/ sensor #2 coupler (1): infinity

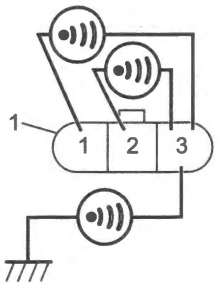

IL06L1110010-02

- Voltage
  - Turn the ignition switch ON.
  - Between "T3" at the IAP sensor #2 coupler (1) and ground: approx. 0 V

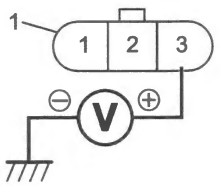

IL06L1110012-02

Is check result OK?

Yes Go to Step 4.

No Repair or replace the "T3" wire at the IAP sensor #2 coupler.

Step 5

IAP sensor #2 output voltage at idle speed check

1) Turn the ignition switch OFF.
2) Measure the IAP sensor voltage. Refer to "IAP Sensor Output Voltage" under ☞(Page 1C-3).

Is check result OK?

Yes Replace the ECM and inspect it again. ☞(Page 1C-2)

No Replace the IAP sensor #2. ☞(Page 1C-4)

DTC P1109 (C13)

BENL06L21104038

DTC Detecting Condition and Trouble Area

DTC detecting condition	Trouble area
P1109 (C13): IAP Sensor Hose Fault IAP sensor #1 and IAP sensor #2 are connected to intake pipe of opposite side. (3 D/C detection logic)	• Improper location of vacuum hoses • IAP sensor #1 and/or #2 • IAP sensor #1 and/or #2 circuit • ECM

Wiring Diagram

Refer to "Engine Control System Wiring Diagram" (Page 1A-6).

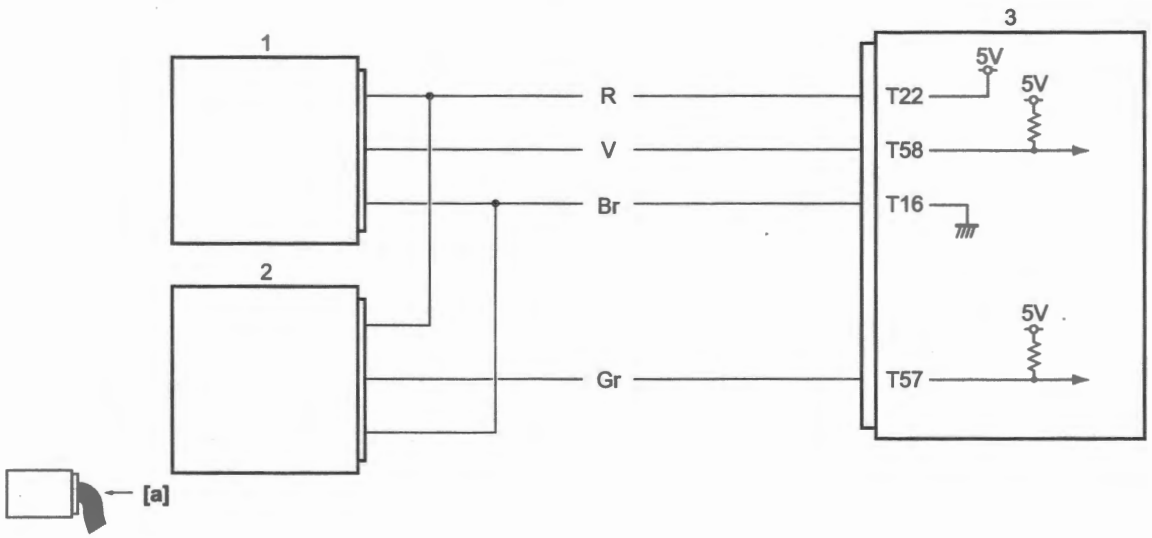

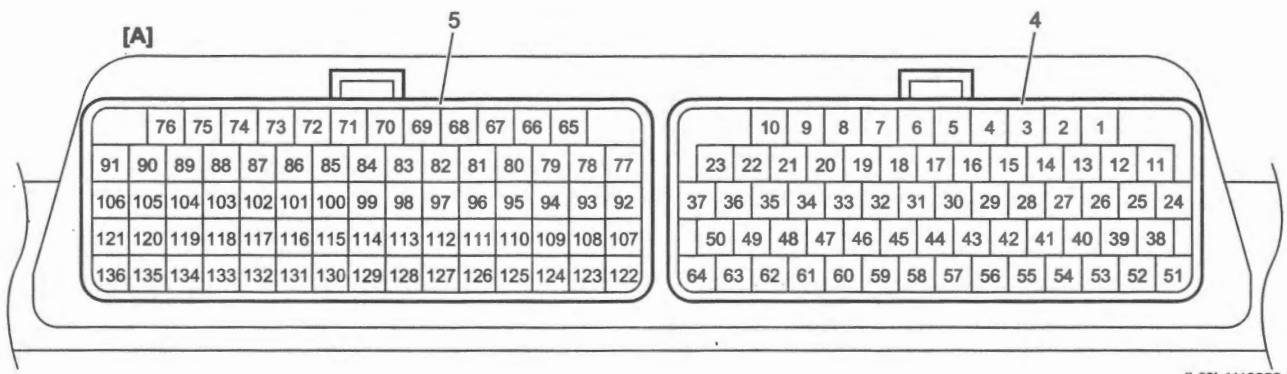

IL06L1110006-03

[A]: ECM coupler "T" (View [a])	2. IAP sensor #2	4. Coupler "A"
1. IAP sensor #1	3. ECM	5. Coupler "B"

Troubleshooting

Step 1

IAP sensor vacuum hose check

- Check that the IAP sensor vacuum hose is connected correctly. ☞(Page 1D-3)
- Check the IAP sensor vacuum hose for wear and damage.

Is check result OK?

Yes — Go to Step 2.

No — Repair or replace the IAP sensor vacuum hose.

Step 2

IAP sensor circuit check

1) Check the IAP sensor circuit.
   - IAP sensor #1: Refer to "Step 2" – "Step 4" under "DTC P0105 / P0106 / P0107 (C13)" (Page 1A-34)
   - IAP sensor #2: Refer to "Step 2" – "Step 4" under "DTC P1105 / P1106 / P1107 (C17)" (Page 1A-83)

Is check result OK?

Yes — Go to Step 3.

No — Repair or replace the defective wire harness.

Step 3

IAP sensor output voltage at idle speed check

1) Turn the ignition switch OFF.
2) Measure the IAP sensor voltage. Refer to "IAP Sensor Output Voltage" under ☞(Page 1C-3).

Is check result OK?

Yes — Replace the ECM and inspect it again. ☞(Page 1C-2)

No — Replace the IAP sensor #1 or #2. ☞(Page 1C-4)

DTC P1610 (C42)

BENL06L21104039

NOTE

For model with immobilizer control system, refer to "DTC P1610 (C42)" in Section 10C (Page 10C-4).

DTC Detecting Condition and Trouble Area

DTC detecting condition	Trouble area
P1610 (C42): Ignition Switch Signal Circuit Ignition switch signal is not input to the ECM. (1 D/C detection logic)	• Ignition switch • Ignition switch circuit • ECM

Troubleshooting

Refer to "Ignition Switch Inspection" in Section 1H (Page 1H-8) for details.

DTC P1622 (C68)

BENL06L21104040

DTC Detecting Condition and Trouble Area

DTC detecting condition	Trouble area
P1622 (C68): Control Module ROM Error EEPROM in ECM is corrupted. (1 D/C detection logic)	• ECM coupler connection • ECM

Troubleshooting

Step 1

ECM coupler connection check

1) Turn the ignition switch OFF.
2) Disconnect the ECM couplers. ☞(Page 1C-2)
3) Check for proper terminal connection to the ECM couplers.
4) If connections are OK, reconnect the ECM couplers.
5) Perform "DTC Check" (Page 1A-11) and check DTC.

Is DTC P1622 (C68) still detected?

Yes — Replace the ECM and inspect it again. ☞(Page 1C-2)

No — End.

DTC P1650 (C71)

BENL06L21104041

DTC Detecting Condition and Trouble Area

DTC detecting condition	Trouble area
P1650 (C71): Inertial Measurement Unit ECM receives abnormal signal from IMU. (3 D/C detection logic)	• IMU • IMU circuit • ECM

Wiring Diagram

Refer to "Engine Control System Wiring Diagram" (Page 1A-6).

Troubleshooting

Step 1

ABS DTC check

1) Check that DTC is detected in ABS. ☞(Page 4E-14)

Is the DTC detected?

Yes — Go to troubleshooting for DTCs. Refer to "DTC Table" in Section 4E (Page 4E-19).

No — Perform troubleshooting of "DTC C1671 (71)" in Section 4E (Page 4E-46).

If check result is OK, replace the ECM and inspect it again. ☞(Page 1C-2)

DTC P1700 / P1701 (C23)

BENL06L21104042

DTC Detecting Condition and Trouble Area

DTC detecting condition	Trouble area
P1700 (C23): TO Sensor Circuit TO sensor output voltage is higher than 4.60 V. (1 D/C detection logic)	• TO sensor • TO sensor circuit • ECM
P1701 (C23): TO Sensor Circuit Low TO sensor output voltage is lower than 0.20 V. (1 D/C detection logic)	

Wiring Diagram

Refer to "Engine Control System Wiring Diagram" (Page 1A-6).

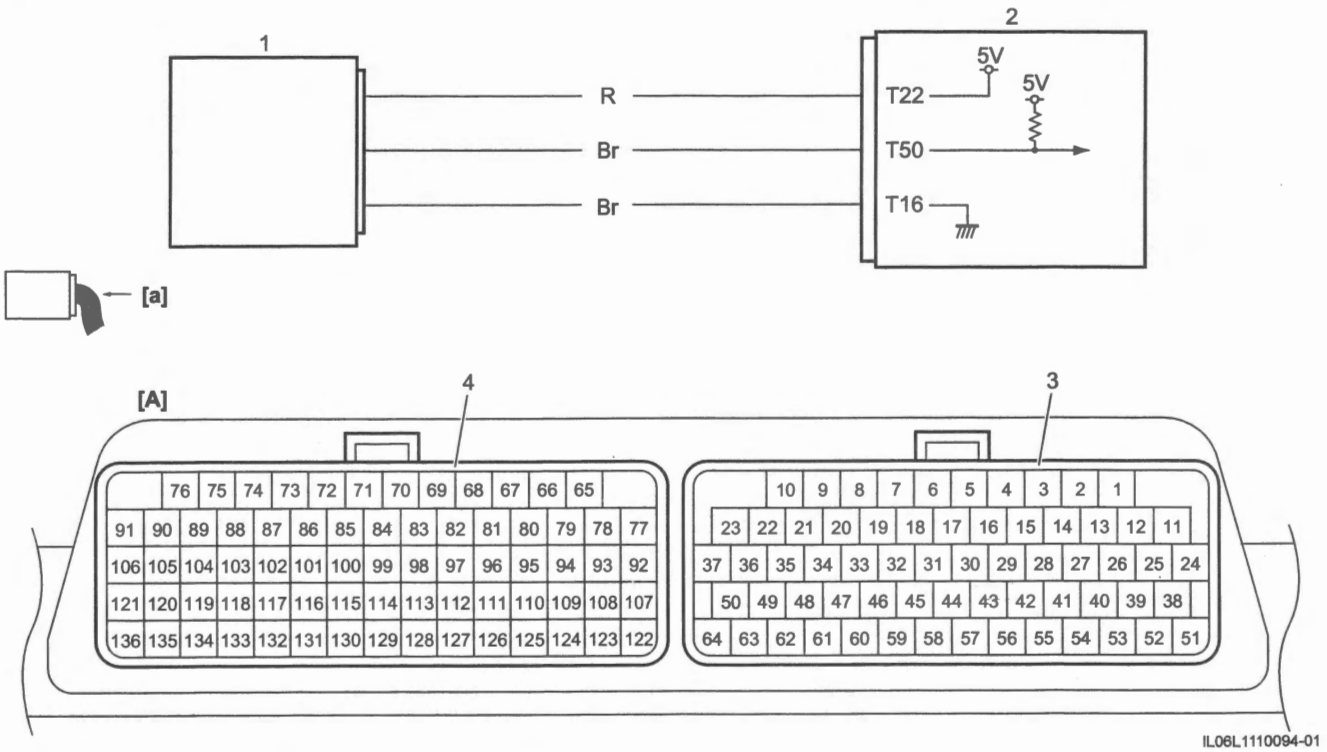

IL06L1110094-01

[A]: ECM coupler "T" (View [a])	2. ECM	4. Coupler "B"
1. TO sensor	3. Coupler "A"	

Troubleshooting

Step 1

TO sensor power supply circuit check

1) Turn the ignition switch OFF.
2) Disconnect the TO sensor coupler. ☞(Page 1C-11)
3) Check for proper terminal connection to the TO sensor coupler (1).
4) If connections are OK, turn the ignition switch ON.
5) Measure the voltage between the "T4" and "T6".

TO sensor power supply voltage
[Standard]: 4.5 – 5.5 V

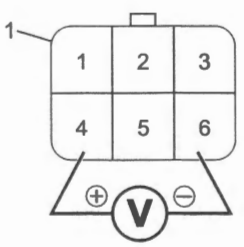

IJ27K2112037-01

Is check result OK?

Yes Go to Step 3.

No Go to Step 2.

Step 2

TO sensor ground circuit check

1) Measure the voltage between the "T4" at the TO sensor coupler (1) and ground.

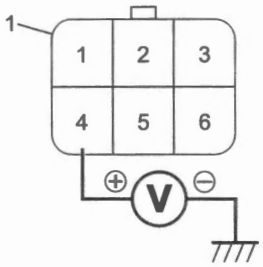

IJ27K2112038-01

Is voltage same as Step 1?

Yes — Repair or replace the "T6" wire at the TO sensor coupler.

No — Repair or replace the "T4" wire at the TO sensor coupler.

Step 3

TO sensor signal circuit check

1) Turn the ignition switch OFF.
2) Disconnect the ECM coupler "A". ☞(Page 1C-2)
3) Check for proper terminal connection to the ECM coupler "A".
4) If connections are OK, check the following points.
   - Resistance
     - Between "T5" at the TO sensor coupler (1) and "T50" at the ECM coupler "A" (2): less then 1 Ω

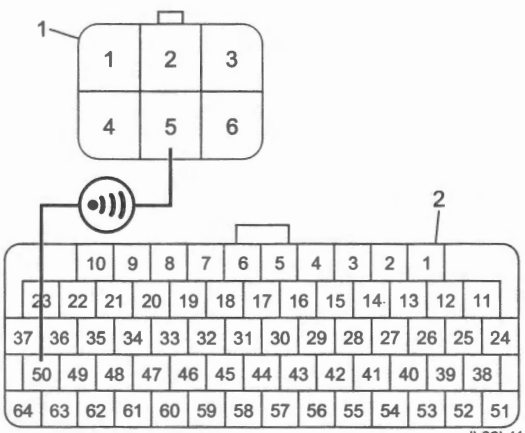

IL06L1110095-01

     - Between "T5" at the TO sensor coupler (1) and ground: infinity

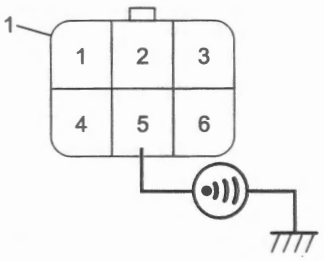

IJ27K2112040-01

     - Between "T5" and other terminal at TO sensor coupler (1): infinity

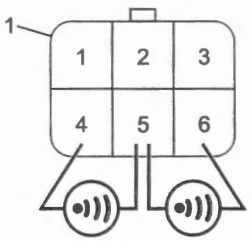

IJ27K2112041-01

   - Voltage
     - Turn the ignition switch ON.
     - Between "T5" at the TO sensor coupler (1) and ground: approx. 0 V

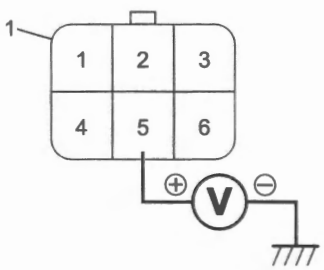

IJ27K2112042-01

Is check result OK?

Yes — Go to Step 4.

No — Repair or replace the "T4" wire at the TO sensor coupler.

Step 4

TO sensor output voltage check

1) Turn the ignition switch OFF.
2) Connect the ECM coupler and TO sensor coupler.
3) Check the TO sensor output voltage. Refer to "TO Sensor Output Voltage" under "TO Sensor Inspection" in Section 1C (Page 1C-10).

Is check result OK?

Yes — Replace the ECM and inspect it again. ☞(Page 1C-2)

No — Replace the TO sensor. ☞(Page 1C-11)

DTC P2101 (C30)

BENL06L21104043

DTC Detecting Condition and Trouble Area

DTC detecting condition	Trouble area
P2101 (C30): Throttle Actuator "A" Control Motor Circuit Range / Performance Any of the following conditions is met. • Throttle valve motor #1 and/or its circuit malfunction is detected. • Throttle valve #1 sticking is detected • Difference between measured throttle valve #1 position and targeted throttle valve #1 position is out of the specified range. • The target value of throttle valve #1 position does not become stable. • Throttle valve motor #1 power supply circuit malfunction is detected. • Throttle valve #1 does not become fully closed position. • TP sensor #1 malfunction is detected. (1 D/C detection logic)	• Throttle valve motor • Throttle valve motor circuit • Throttle valve sticking • Throttle valve motor power supply circuit • TP sensor • TP sensor circuit • ECM

Wiring Diagram

Refer to "Engine Control System Wiring Diagram" (Page 1A-6).

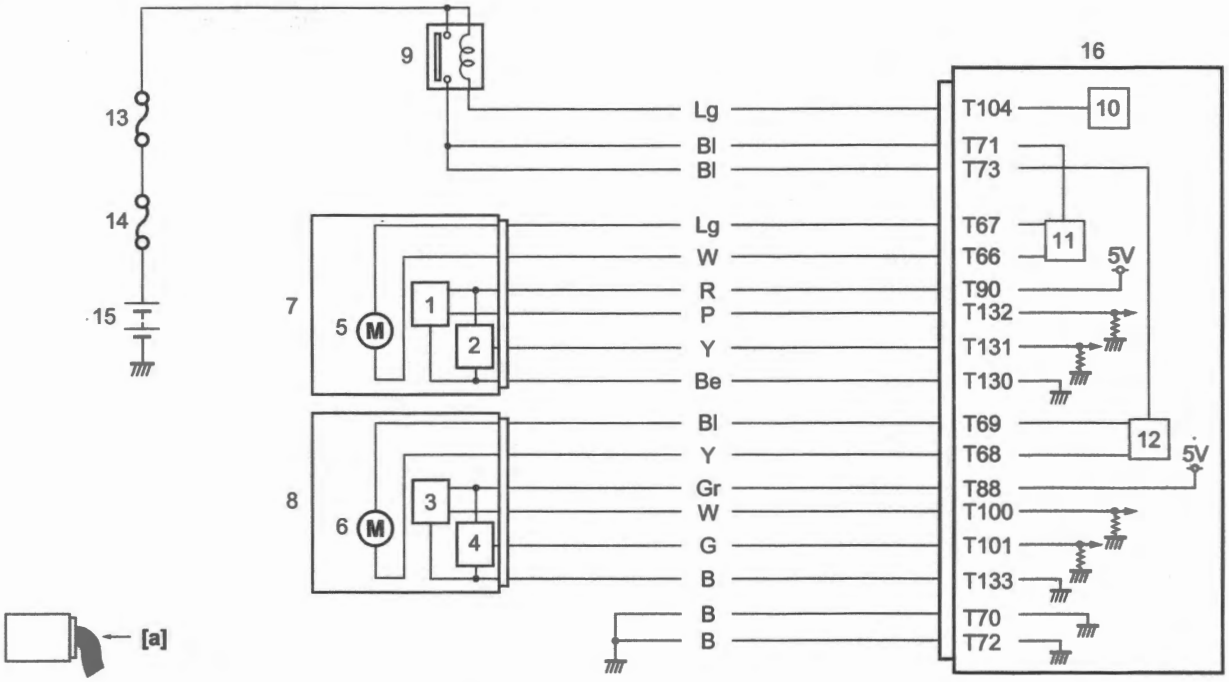

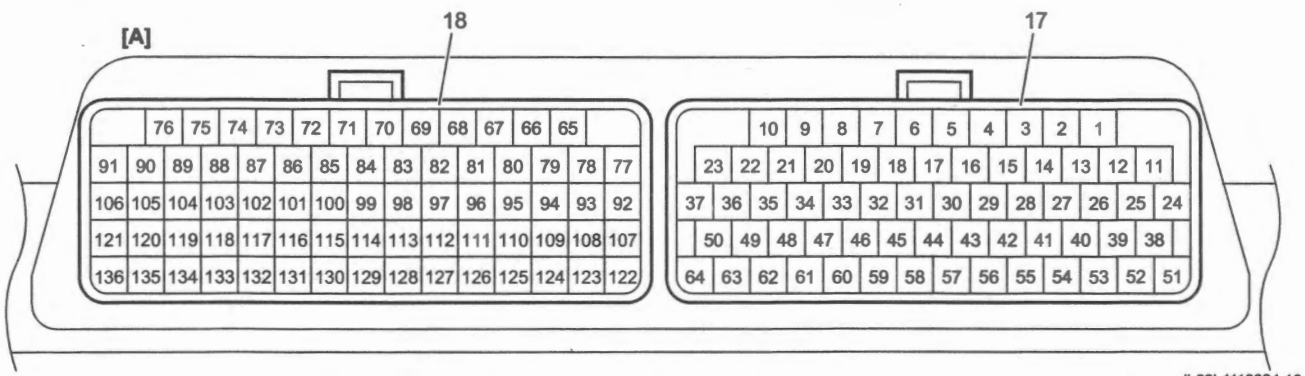

IL06L1110024-10

[A]: ECM coupler "T" (View [a])	7. Throttle body #1	14. Main fuse (30 A)
1. TP sensor #1 (main)	8. Throttle body #2	15. Battery
2. TP sensor #1 (sub)	9. Throttle valve motor relay	16. ECM
3. TP sensor #2 (main)	10. Throttle valve motor relay drive circuit	17. Coupler "A"
4. TP sensor #2 (sub)	11. Throttle valve motor #1 drive circuit	18. Coupler "B"
5. Throttle valve motor #1	12. Throttle valve motor #2 drive circuit	
6. Throttle valve motor #2	13. Fuel fuse (10 A)	

Troubleshooting

Step 1
DTC check

Is there any DTC(s) other than P2101 (C28) and P210B (C85)?

Yes — Go to troubleshooting for applicable DTC.

No — Go to Step 2.

Step 2
Throttle valve motor #1 drive circuit check

1) Turn the ignition switch OFF.
2) Disconnect the throttle body #1 coupler and ECM coupler "B".
   - Throttle body #1 coupler: ☞(Page 1D-7)
   - ECM coupler "B": ☞(Page 1C-2)
3) Check for proper terminal connection to the throttle body #1 coupler and ECM coupler "B".
4) If connections are OK, check the following points.
   - Resistance
     - Between "T6" at the throttle body #1 coupler (1) and "T67" at the ECM coupler "B" (2): less then 1 Ω
     - Between "T5" at the throttle body #1 coupler and "T66" at the ECM coupler "B": less then 1 Ω

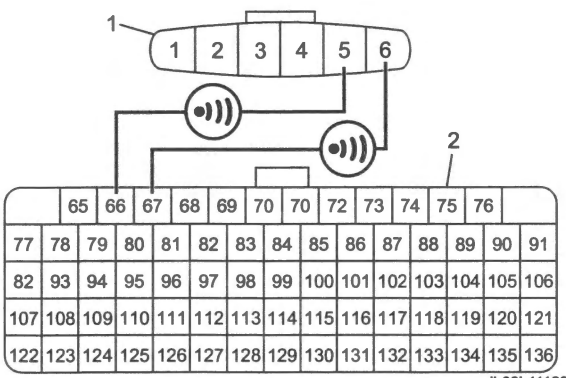

IL06L1110096-01

   - Between "T6" at the throttle body #1 coupler (1) and ground: infinity
   - Between "T5" at the throttle body #1 coupler and ground: infinity

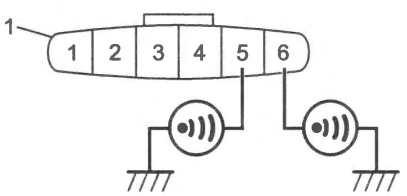

IL06L1110097-02

   - Between "T6" and other terminal (2) at throttle body #1 coupler (1): infinity
   - Between "T5" and other terminal at throttle body #1 coupler: infinity

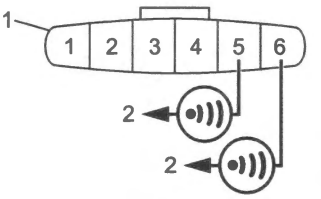

IL06L1110098-02

   - Voltage
     - Turn the ignition switch ON.
     - Between "T6" at the throttle body #1 coupler (1) and ground: approx. 0 V
     - Between "T5" at the throttle body #1 coupler and ground: approx. 0 V

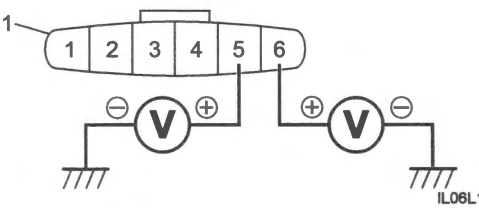

IL06L1110099-02

Is check result OK?

Yes — Go to Step 3.

No — Repair or replace the defective wire harness.

Step 3
Throttle valve and throttle valve motor check

1) Check the following points. ☞(Page 1C-12)
   - Throttle valve operation:
   - Throttle valve motor resistance:

Is check result OK?

Yes — Go to Step 4.

No — Replace the throttle body #1. ☞(Page 1D-7)

Step 4
Throttle valve motor #1 power supply circuit check

1) Check the throttle valve motor #1 power supply circuit. Refer to "Step 2" under "DTC P2102 (C30)" (Page 1A-95).

Is check result OK?

Yes — Go to Step 5.

No — Repair or replace the defective wire harness or replace the defective parts.

Step 5

TP sensor #1 circuit check

1) Check the TP sensor #1 circuit.
   - TP sensor #1 (main) circuit: Refer to "Step 1" – "Step 3" under "DTC P0120 / P0123 (C29)" (Page 1A-41)
   - TP sensor #1 (sub) circuit: Refer to "Step 1" – "Step 3" under "DTC P0220 / P0223 (C29)" (Page 1A-52)

Is check result OK?

Yes — Go to Step 6.

No — Repair or replace the defective wire harness.

Step 6

TP sensor #1 output voltage check

1) Measure the TP sensor #1 output voltage. ☞(Page 1C-7)

Is check result OK?

Yes — Go to Step 7.

No — Replace the throttle body #1. ☞(Page 1D-7)

Step 7

Was DTC P210B (C85) detected at Step 1?

Yes — Perform the "Step 2" – "Step 6" under "DTC P210B (C86)" (Page 1A-99).

If check result is OK, replace the ECM and inspect it again. ☞(Page 1C-2)

No — Replace the ECM and inspect it again. ☞(Page 1C-2)

DTC P2102 (C30)

BENL06L21104044

DTC Detecting Condition and Trouble Area

DTC detecting condition	Trouble area
P2102 (C30): Throttle Actuator "A" Control Motor Circuit Low Power supply voltage to throttle valve motor #1 is lower than specified value although the battery voltage is normal. (1 D/C detection logic)	• Throttle valve motor power supply circuit • Throttle valve motor relay • ECM

Wiring Diagram

Refer to "Engine Control System Wiring Diagram" (Page 1A-6).

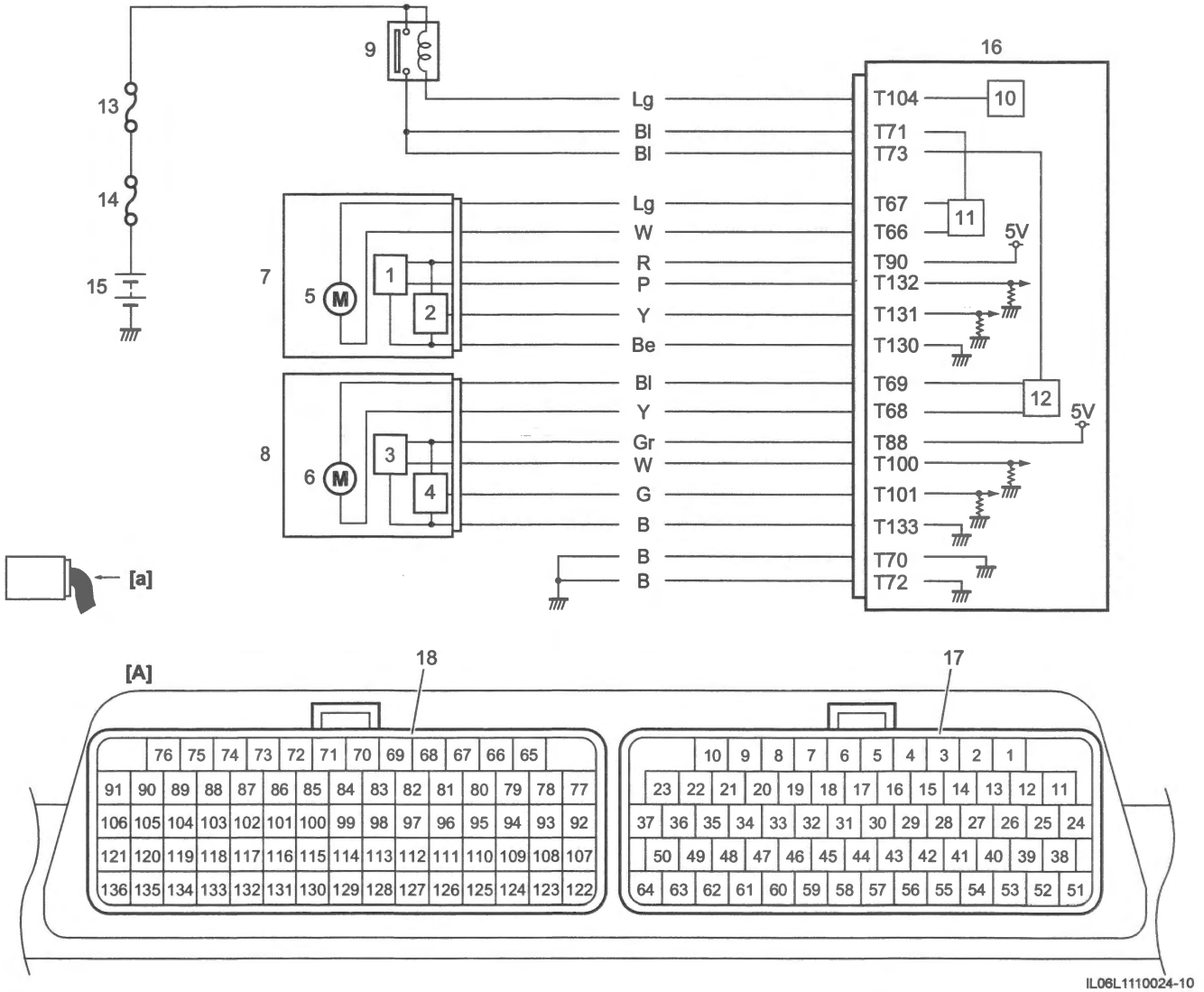

IL06L1110024-10

[A]: ECM coupler "T" (View [a])	7. Throttle body #1	14. Main fuse (30 A)
1. TP sensor #1 (main)	8. Throttle body #2	15. Battery
2. TP sensor #1 (sub)	9. Throttle valve motor relay	16. ECM
3. TP sensor #2 (main)	10. Throttle valve motor relay drive circuit	17. Coupler "A"
4. TP sensor #2 (sub)	11. Throttle valve motor #1 drive circuit	18. Coupler "B"
5. Throttle valve motor #1	12. Throttle valve motor #2 drive circuit	
6. Throttle valve motor #2	13. Fuel fuse (10 A)	

Troubleshooting

Step 1

DTC check

Is DTC P210C (C85) detected together?

Yes Go to Step 3.

No Go to Step 2.

Step 2

Throttle valve motor #1 power supply circuit check

1) Turn the ignition switch OFF.
2) Disconnect the relay box coupler and ECM coupler "B".
   - Relay box coupler (1): ☞(Page 9A-42)

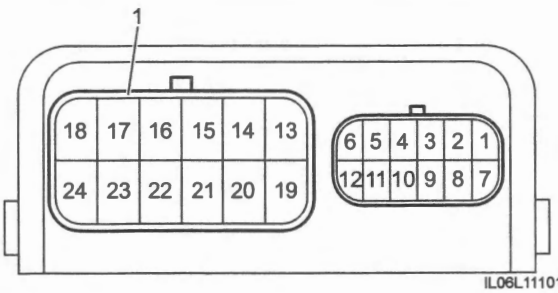

IL06L1110100-02

   - ECM coupler "B": ☞(Page 1C-2)
3) Check for proper terminal connection to the relay box and ECM coupler "B".
4) If connections are OK, check the following points.
   - Resistance
     - Between "T21" at the relay box coupler (1) and "T71" at the ECM coupler "B" (2): less then 1 Ω

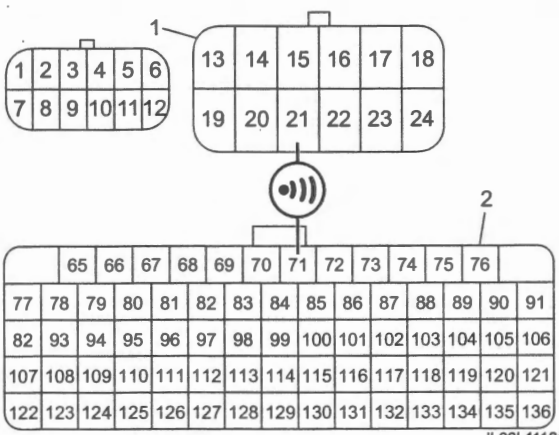

IL06L1110101-01

     - Between "T71" at the ECM coupler "B" (1) and ground: infinity

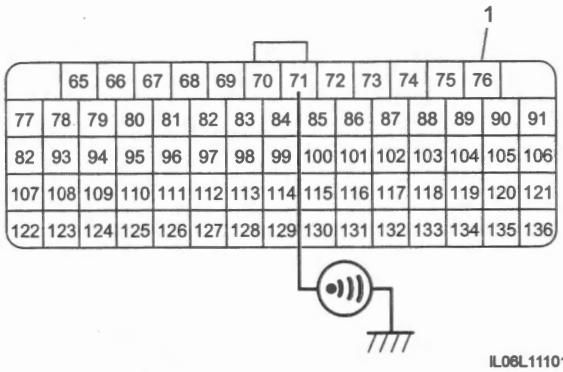

IL06L1110102-01

     - Between "T71" and other terminal (2) at ECM coupler "B" (1): infinity

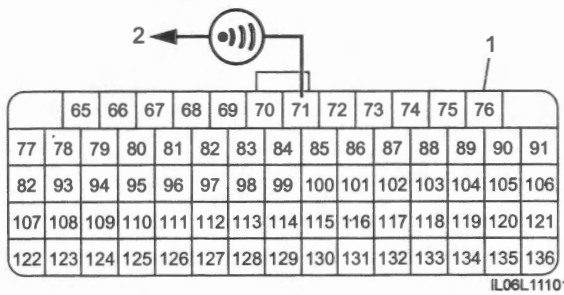

IL06L1110103-01

     - Between "T70" at the ECM coupler "B" (1) and ground: less then 1 Ω

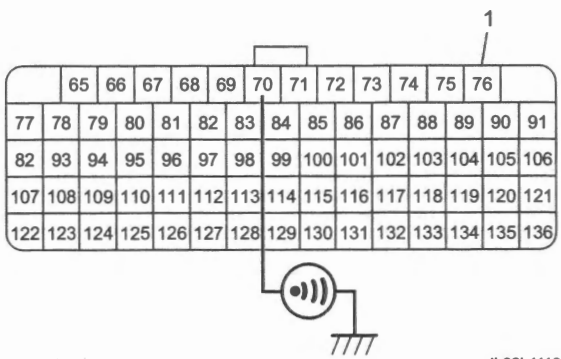

IL06L1110118-01

   - Voltage
     - Turn the ignition switch ON.
     - Between "T71" at the ECM coupler "B" (1) and ground: approx. 0 V

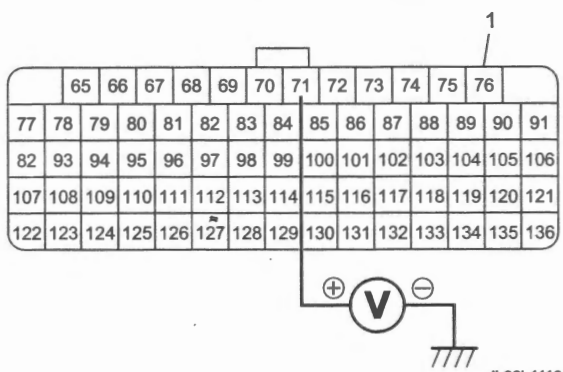

IL06L1110104-02

Is check result OK?

Yes — Replace the ECM and inspect it again. ☞(Page 1C-2)

No — Repair or replace the "T71" wire at the ECM coupler "B".

Step 3

Throttle valve motor relay power supply circuit check

1) Turn the ignition switch OFF.
2) Disconnect the relay box couplers. ☞(Page 9A-42).
3) Check for proper terminal connection to the relay box couplers.
4) If connections are OK, measure the voltage between "T4" at the relay box coupler (1) and ground.
5) If OK, measure the voltage between "T15" at the relay box coupler (2) and ground.

FP relay power supply voltage
[Standard]: Battery voltage

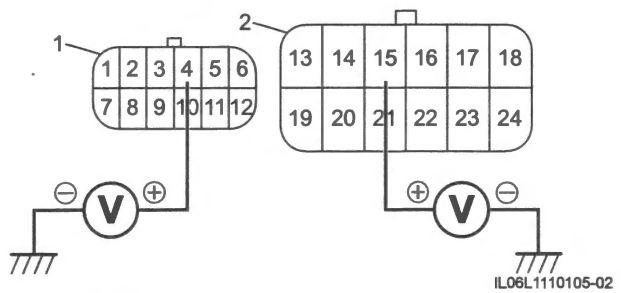

IL06L1110105-02

Is check result OK?

Yes — Go to Step 4.

No — Repair or replace the defective wire harness.

Step 4

Throttle valve motor relay check

1) Check the throttle valve motor relay. ☞(Page 1C-13)

Is check result OK?

Yes — Go to Step 5.

No — Replace the relay box. ☞(Page 9A-42)

Step 5

Throttle valve motor relay drive circuit check

1) Turn the ignition switch OFF.
2) Disconnect the ECM coupler "B". ☞(Page 1C-2)
3) Check for proper terminal connection to the ECM coupler "B".
4) If connections are OK, check the following points.
   - Resistance
     - Between "T10" at the relay box coupler (1) and "T104" at the ECM coupler "B"(2): less than 1 Ω

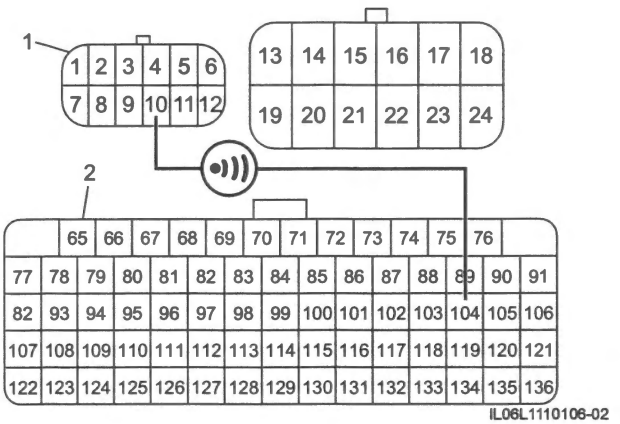

IL06L1110106-02

     - Between "T10" at the relay box coupler (1) and ground: infinity

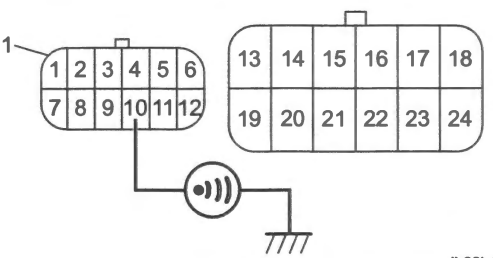

IL06L1110107-02

     - Between "T10" and other terminal (2) at relay box coupler (1): Infinity

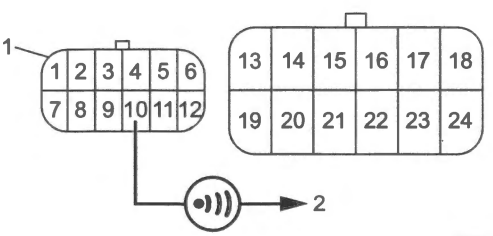

IL06L1110108-02

- Voltage
  - Turn the ignition switch ON.
  - Between "T7" at the relay box coupler (1) and ground: approx. 0 V

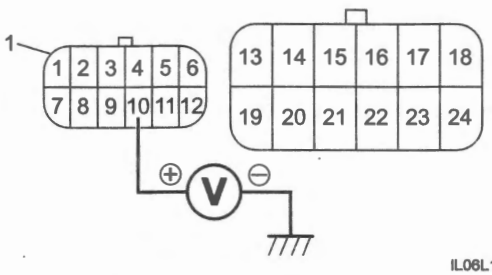

IL06L1110109-02

Is check result OK?

Yes — Go to Step 6.

No — Repair or replace the "T10" wire at the relay box coupler.

Step 6

Throttle valve motor power supply circuit check

1) Turn the ignition switch OFF.
2) Disconnect the ECM coupler "B". ☞(Page 1C-2)
3) Check for proper terminal connection to the ECM coupler "B".
4) If connections are OK, check the following points.
   - Resistance
     - Between "T21" at the relay box coupler (1) and "T71" at the ECM coupler "B" (2): less then 1 Ω
     - Between "T21" at the relay box coupler and "T73" at the ECM coupler "B": less then 1 Ω

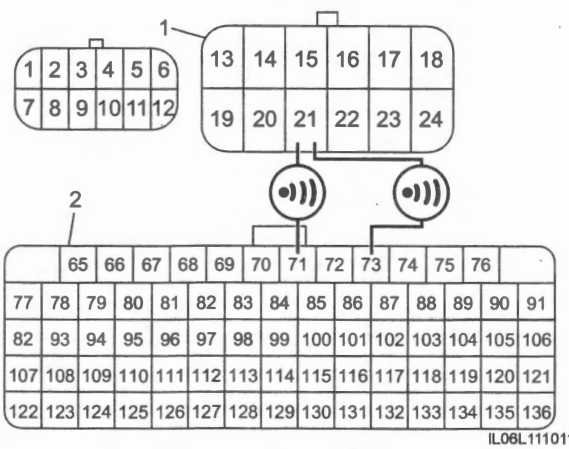

IL06L1110110-02

  - Between "T71" at the ECM coupler "B" (1) and ground: infinity
  - Between "T73" at the ECM coupler "B" and ground: infinity

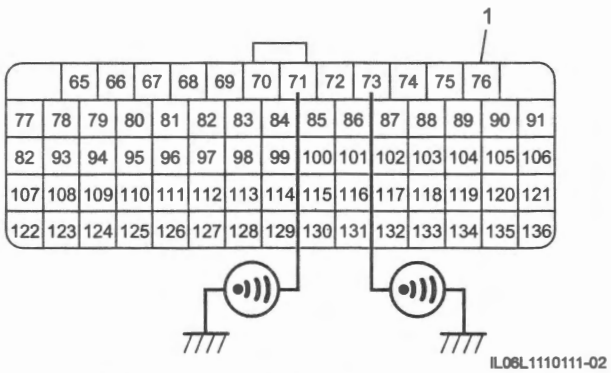

IL06L1110111-02

  - Between "T71" and other terminal (2) at ECM coupler "B" (1): infinity
  - Between "T73" and other terminal at ECM coupler "B": infinity

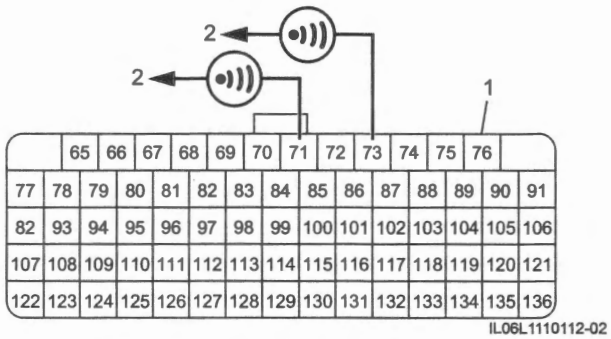

IL06L1110112-02

  - Between "T70" at the ECM coupler "B" (1) and ground: less then 1 Ω
  - Between "T72" at the ECM coupler "B" and ground: less then 1 Ω

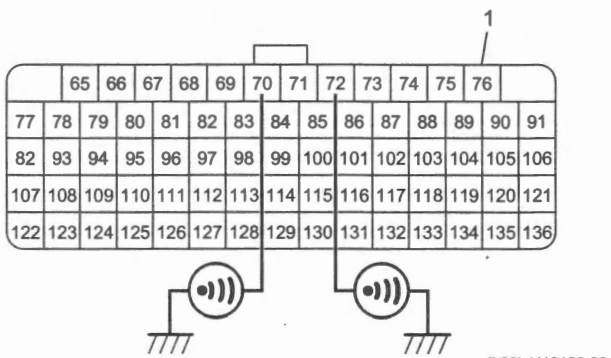

IL06L1110120-02

- Voltage
  - Turn the ignition switch ON.
  - Between "T71" at the ECM coupler "B" (1) and ground: approx. 0 V

– Between "T73" at the ECM coupler "B" and ground: approx. 0 V

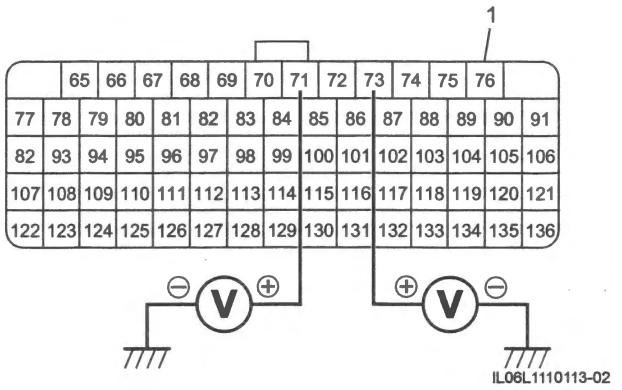

Is check result OK?

Yes	Replace the ECM and inspect it again. ☞(Page 1C-2)
No	Repair or replace the defective wire harness.

DTC P210B (C86)

BENL06L21104045

DTC Detecting Condition and Trouble Area

DTC detecting condition	Trouble area
P210B (C86): Throttle Actuator "B" Control Motor Circuit Range / Performance Any of the following conditions is met. • Throttle valve motor #2 and/or its circuit malfunction is detected. • Throttle valve #2 sticking is detected • Difference between measured throttle valve #2 position and targeted throttle valve #2 position is out of the specified range. • The target value of throttle valve #2 position does not become stable. • Throttle valve motor #2 power supply circuit malfunction is detected. • Throttle valve #2 does not become fully closed position. • TP sensor #2 malfunction is detected. (1 D/C detection logic)	• Throttle valve motor • Throttle valve motor circuit • Throttle valve sticking • Throttle valve motor power supply circuit • TP sensor • TP sensor circuit • ECM

Wiring Diagram

Refer to "Engine Control System Wiring Diagram" (Page 1A-6).

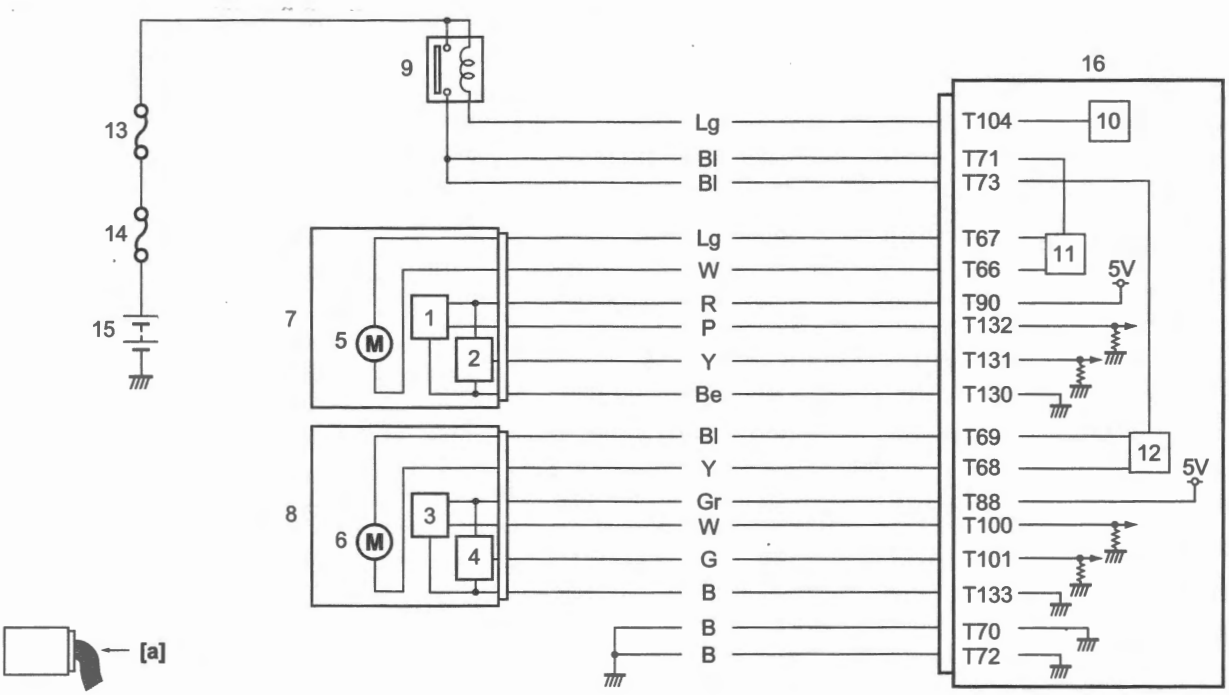

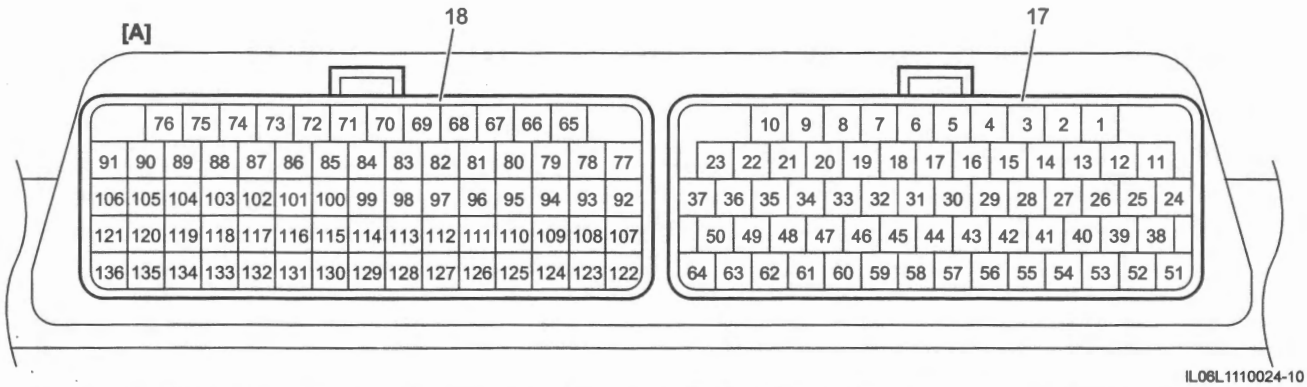

IL06L1110024-10

[A]: ECM coupler "T" (View [a])	7. Throttle body #1	14. Main fuse (30 A)
1. TP sensor #1 (main)	8. Throttle body #2	15. Battery
2. TP sensor #1 (sub)	9. Throttle valve motor relay	16. ECM
3. TP sensor #2 (main)	10. Throttle valve motor relay drive circuit	17. Coupler "A"
4. TP sensor #2 (sub)	11. Throttle valve motor #1 drive circuit	18. Coupler "B"
5. Throttle valve motor #1	12. Throttle valve motor #2 drive circuit	
6. Throttle valve motor #2	13. Fuel fuse (10 A)	

Troubleshooting

Step 1
DTC check

Is there any DTC(s) other than P210B (C85) and P2101 (C28)?

Yes — Go to troubleshooting for applicable DTC.

No — Go to Step 2.

Step 2
Throttle valve motor #2 drive circuit check

1) Turn the ignition switch OFF.
2) Disconnect the throttle body #2 coupler and ECM coupler "B".
   - Throttle body #2 coupler: ☞(Page 1D-7)
   - ECM coupler "B": ☞(Page 1C-2)
3) Check for proper terminal connection to the throttle body #2 coupler and ECM coupler "B".
4) If connections are OK, check the following points.
   - Resistance
     - Between "T6" at the throttle body #2 coupler (1) and "T69" at the ECM coupler "B" (2): less then 1 Ω
     - Between "T5" at the throttle body #2 coupler and "T68" at the ECM coupler "B": less then 1 Ω

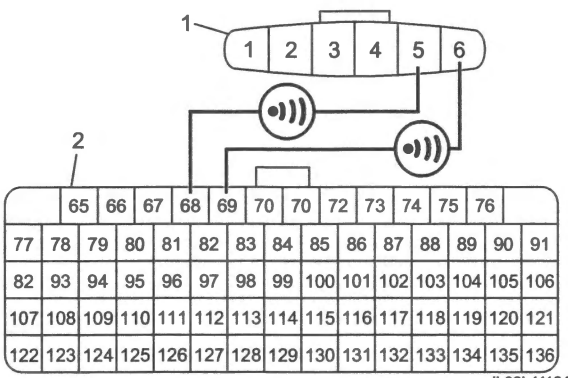

IL06L1110114-01

   - Between "T6" at the throttle body #2 coupler (1) and ground: infinity
   - Between "T5" at the throttle body #2 coupler and ground: infinity

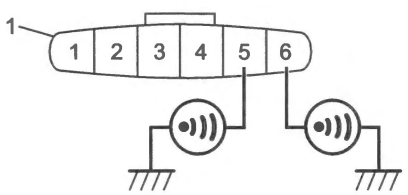

IL06L1110097-02

   - Between "T6" and other terminal (2) at throttle body #2 coupler (1): infinity
   - Between "T5" and other terminal at throttle body #2 coupler: infinity

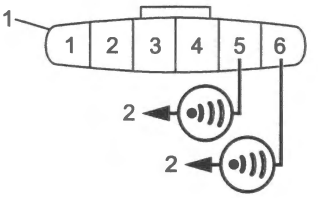

IL06L1110098-02

   - Voltage
     - Turn the ignition switch ON.
     - Between "T6" at the throttle body #2 coupler (1) and ground: approx. 0 V
     - Between "T5" at the throttle body #2 coupler and ground: approx. 0 V

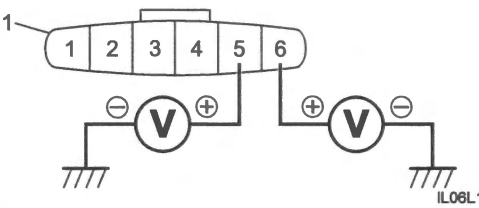

IL06L1110099-02

Is check result OK?

Yes — Go to Step 3.

No — Repair or replace the defective wire harness.

Step 3
Throttle valve and throttle valve motor check

1) Check the following points. ☞(Page 1C-12)
   - Throttle valve operation:
   - Throttle valve motor resistance:

Is check result OK?

Yes — Go to Step 4.

No — Replace the throttle body #2. ☞(Page 1D-7)

Step 4
Throttle valve motor #2 power supply circuit check

1) Check the throttle valve motor #2 power supply circuit. Refer to "Step 2" under "DTC P210C (C86)" (Page 1A-103)

Is check result OK?

Yes — Go to Step 5.

No — Repair or replace the defective wire harness or replace the defective parts.

Step 5

TP sensor #2 circuit check

1) Check the TP sensor #2 circuit.
   - TP sensor #2 (main) circuit: Refer to "Step 1" – "Step 3" under "DTC P0225 / P0228 (C86)" (Page 1A-55)
   - TP sensor #2 (sub) circuit: Refer to "Step 1" – "Step 3" under "DTC P2130 / P2133 (C86)" (Page 1A-113)

Is check result OK?

Yes	Go to Step 6.
No	Repair or replace the defective wire harness.

Step 6

TP sensor #2 output voltage check

1) Measure the TP sensor #2 output voltage. ☞(Page 1C-7)

Is check result OK?

Yes	Go to Step 7.
No	Replace the throttle body #2. ☞(Page 1D-7)

Step 7

Was DTC P2101 (C28) detected at Step 1?

Yes	Perform the "Step 2" – "Step 6" under "DTC P2101 (C30)" (Page 1A-91). If check result is OK, replace the ECM and inspect it again. ☞(Page 1C-2)
No	Replace the ECM and inspect it again. ☞(Page 1C-2)

DTC P210C (C86)

BENL06L21104046

DTC Detecting Condition and Trouble Area

DTC detecting condition	Trouble area
P210C (C86): Throttle Actuator "B" Control Motor Circuit Low Power supply voltage to throttle valve motor #2 is lower than specified value although the battery voltage is normal. (1 D/C detection logic)	• Throttle valve motor power supply circuit • Throttle valve motor relay • ECM

Wiring Diagram

Refer to "Engine Control System Wiring Diagram" (Page 1A-6).

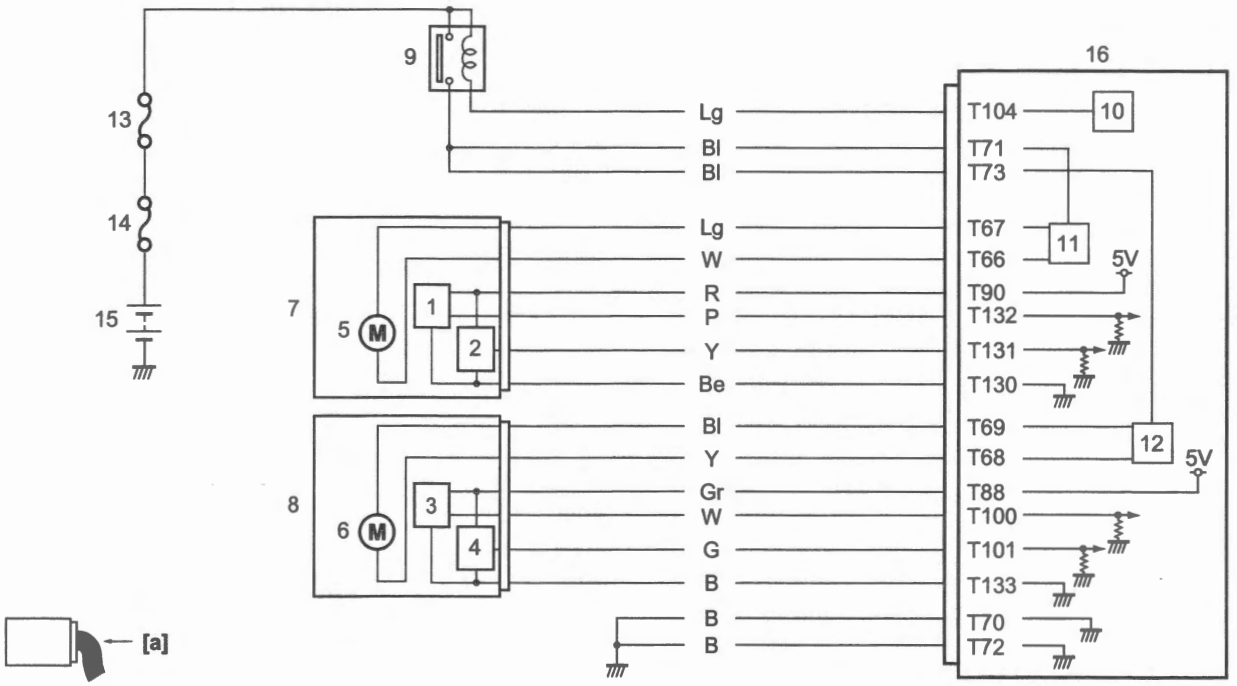

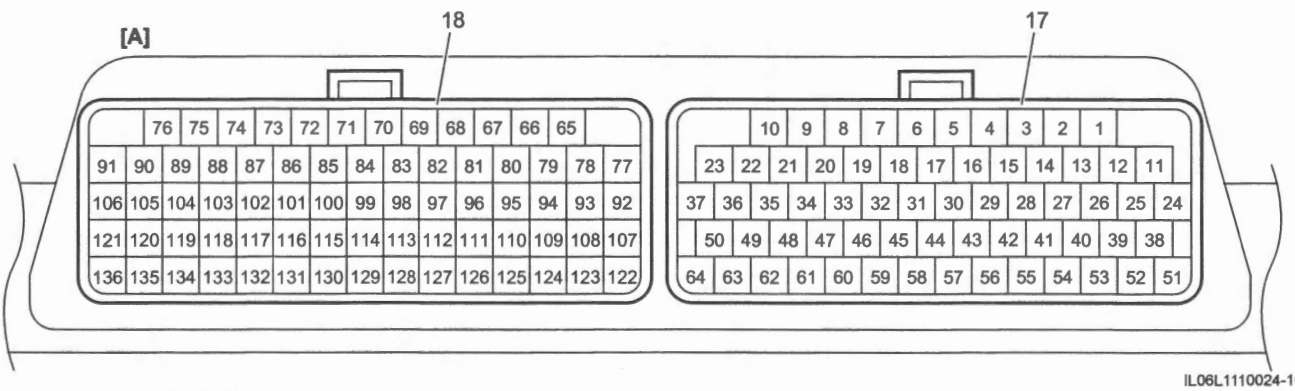

IL06L1110024-10

[A]: ECM coupler "T" (View [a])	7. Throttle body #1	14. Main fuse (30 A)
1. TP sensor #1 (main)	8. Throttle body #2	15. Battery
2. TP sensor #1 (sub)	9. Throttle valve motor relay	16. ECM
3. TP sensor #2 (main)	10. Throttle valve motor relay drive circuit	17. Coupler "A"
4. TP sensor #2 (sub)	11. Throttle valve motor #1 drive circuit	18. Coupler "B"
5. Throttle valve motor #1	12. Throttle valve motor #2 drive circuit	
6. Throttle valve motor #2	13. Fuel fuse (10 A)	

Troubleshooting

Step 1

DTC check

Is DTC P2102 (C28) detected together?

Yes Go to Step 3.

No Go to Step 2.

Step 2

Throttle valve motor #2 power supply circuit check

1) Turn the ignition switch OFF.
2) Disconnect the relay box coupler and ECM coupler "B".
   - Relay box coupler (1): ☞(Page 9A-42)

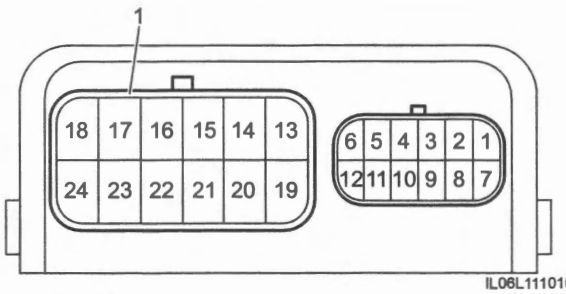

IL06L1110100-02

   - ECM coupler "B": ☞(Page 1C-2)
3) Check for proper terminal connection to the relay box and ECM coupler "B".
4) If connections are OK, check the following points.
   - Resistance
     - Between "T21" at the relay box coupler (1) and "T73" at the ECM coupler "B" (2): less then 1 Ω

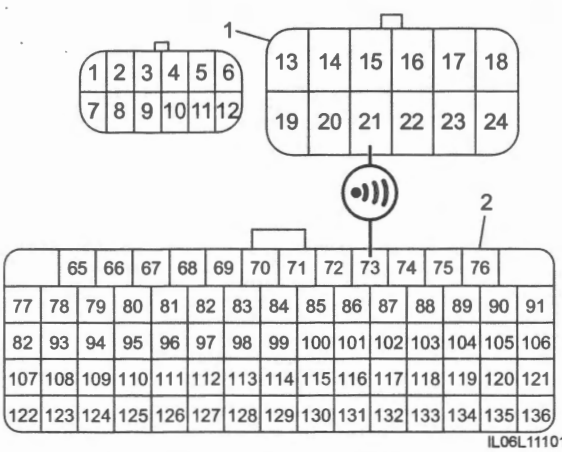

IL06L1110115-01

     - Between "T73" at the ECM coupler "B" (1) and ground: infinity

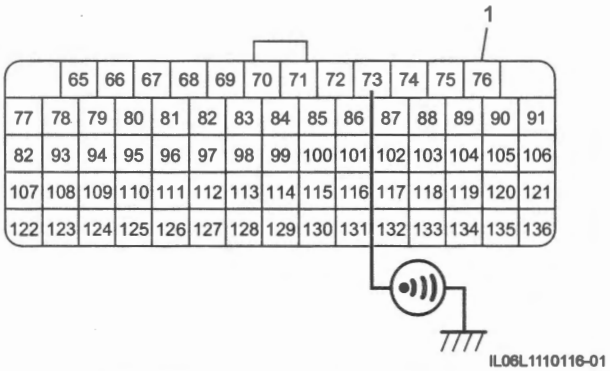

IL06L1110116-01

     - Between "T73" and other terminal (2) at ECM coupler "B" (1): infinity

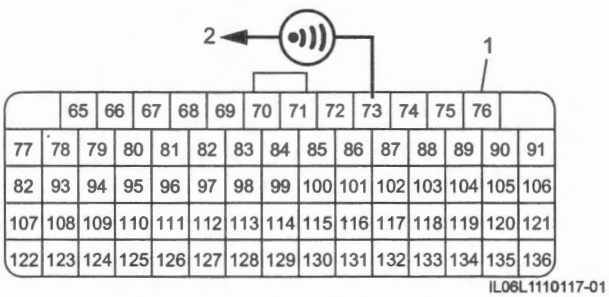

IL06L1110117-01

     - Between "T72" at the ECM coupler "B" (1) and ground: less then 1 Ω

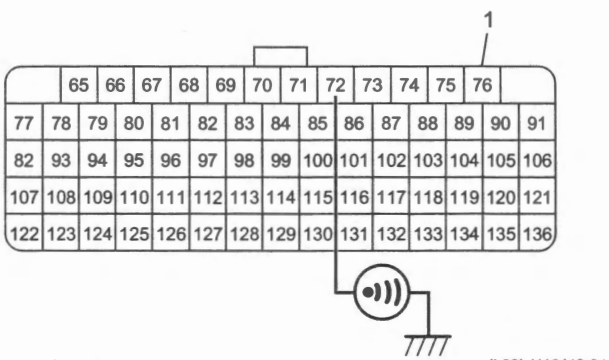

IL06L1110119-01

   - Voltage
     - Turn the ignition switch ON.
     - Between "T73" at the ECM coupler "B" (1) and ground: approx. 0 V

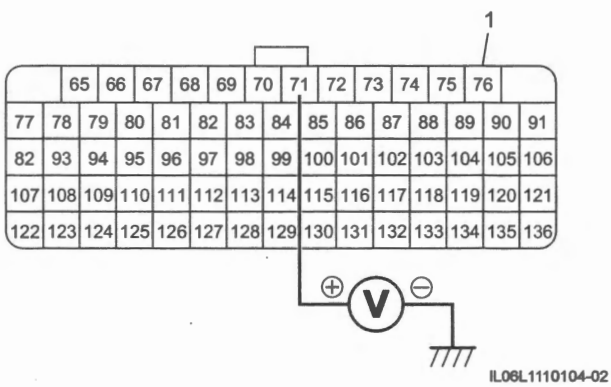

IL06L1110104-02

Is check result OK?

Yes — Replace the ECM and inspect it again. ☞(Page 1C-2)

No — Repair or replace the "T73" wire at the ECM coupler "B".

Step 3

Throttle valve motor relay power supply circuit check

1) Turn the ignition switch OFF.
2) Disconnect the relay box couplers. ☞(Page 9A-42).
3) Check for proper terminal connection to the relay box couplers.
4) If connections are OK, measure the voltage between "T4" at the relay box coupler (1) and ground.
5) If OK, measure the voltage between "T15" at the relay box coupler (2) and ground.

FP relay power supply voltage
[Standard]: Battery voltage

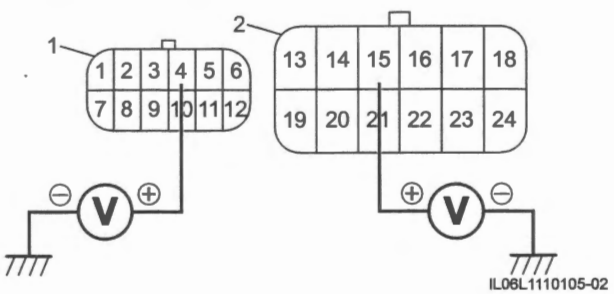

IL06L1110105-02

Is check result OK?

Yes — Go to Step 4.

No — Repair or replace the defective wire harness.

Step 4

Throttle valve motor relay check

1) Check the throttle valve motor relay. ☞(Page 1C-13)

Is check result OK?

Yes — Go to Step 5.

No — Replace the relay box. ☞(Page 9A-42)

Step 5

Throttle valve motor relay drive circuit check

1) Turn the ignition switch OFF.
2) Disconnect the ECM coupler "B". ☞(Page 1C-2)
3) Check for proper terminal connection to the ECM coupler "B".
4) If connections are OK, check the following points.

- Resistance
  - Between "T10" at the relay box coupler (1) and "T104" at the ECM coupler "B"(2): less than 1 Ω

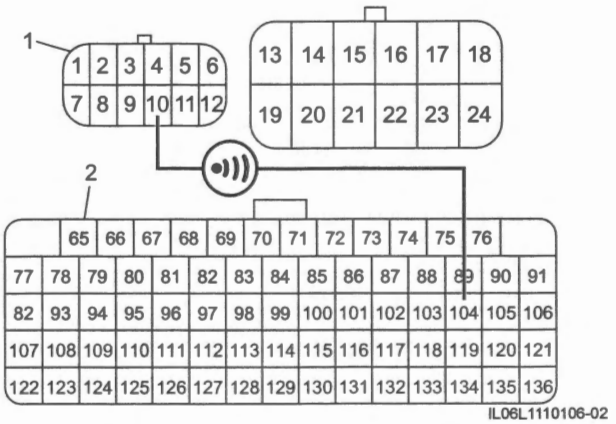

IL06L1110106-02

  - Between "T10" at the relay box coupler (1) and ground: infinity

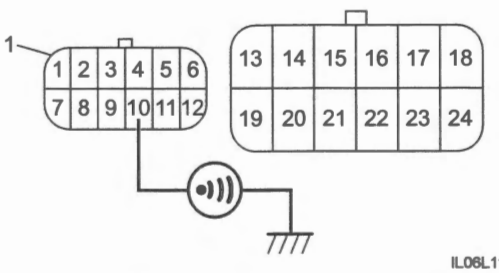

IL06L1110107-02

  - Between "T10" and other terminal (2) at relay box coupler (1): Infinity

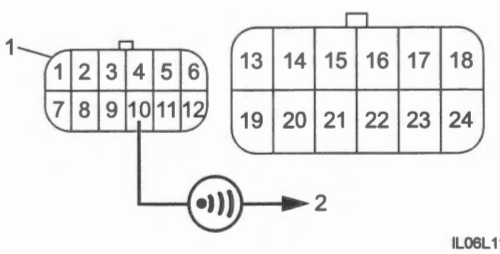

IL06L1110108-02

- Voltage
  - Turn the ignition switch ON.
  - Between "T7" at the relay box coupler (1) and ground: approx. 0 V

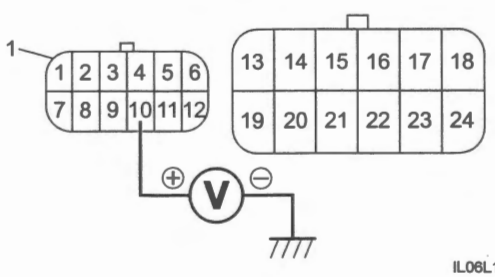

IL06L1110109-02

Is check result OK?

Yes — Go to Step 6.

No — Repair or replace the "T10" wire at the relay box coupler.

Step 6

Throttle valve motor power supply circuit check

1) Turn the ignition switch OFF.
2) Disconnect the ECM coupler "B". ☞(Page 1C-2)
3) Check for proper terminal connection to the ECM coupler "B".
4) If connections are OK, check the following points.
   - Resistance
     - Between "T21" at the relay box coupler (1) and "T71" at the ECM coupler "B" (2): less then 1 Ω
     - Between "T21" at the relay box coupler and "T73" at the ECM coupler "B": less then 1 Ω

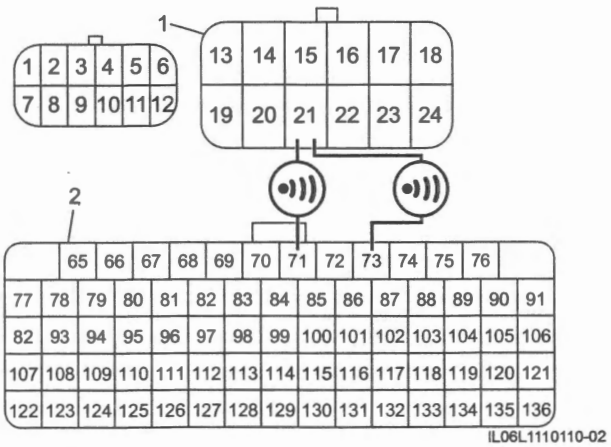

IL06L1110110-02

   - Between "T71" at the ECM coupler "B" (1) and ground: infinity
   - Between "T73" at the ECM coupler "B" and ground: infinity

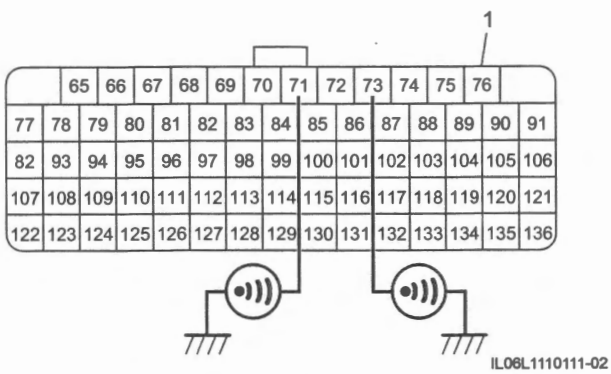

IL06L1110111-02

   - Between "T71" and other terminal (2) at ECM coupler "B" (1): infinity
   - Between "T73" and other terminal at ECM coupler "B": infinity

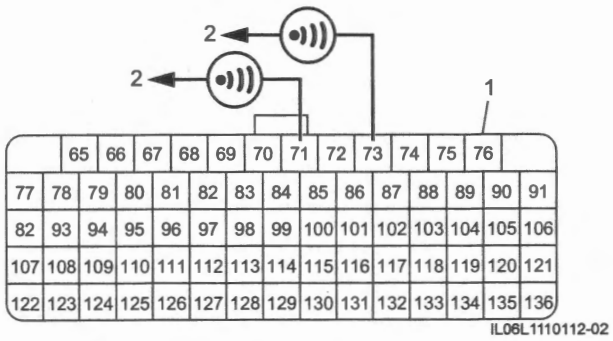

IL06L1110112-02

   - Between "T70" at the ECM coupler "B" (1) and ground: less then 1 Ω
   - Between "T72" at the ECM coupler "B" and ground: less then 1 Ω

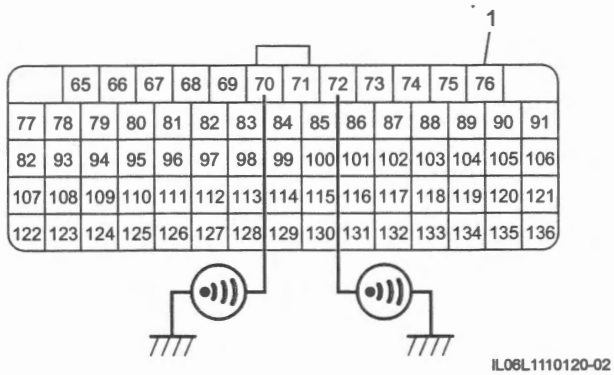

IL06L1110120-02

   - Voltage
     - Turn the ignition switch ON.
     - Between "T71" at the ECM coupler "B" (1) and ground: approx. 0 V
     - Between "T73" at the ECM coupler "B" and ground: approx. 0 V

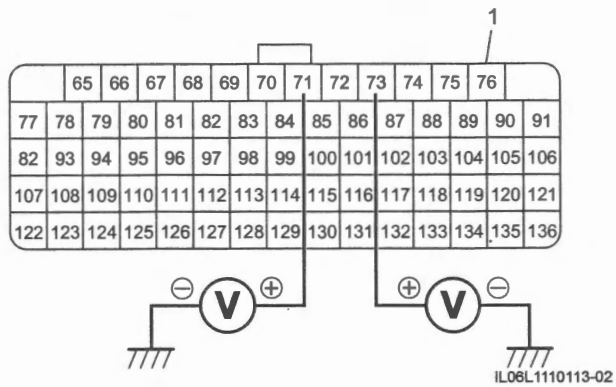

IL06L1110113-02

Is check result OK?

Yes — Replace the ECM and inspect it again. ☞(Page 1C-2)

No — Repair or replace the defective wire harness.

DTC P210E (C86)

BENL06L21104047

DTC Detecting Condition and Trouble Area

DTC detecting condition	Trouble area
P210E (C86): Throttle / Pedal Position Sensor / Switch "C" / "F" Voltage Correlation Difference between TP sensor #2 (main) value and TP sensor #2 (sub) value is out of the specified range. (1 D/C detection logic)	• TP sensor #2 • TP sensor #2 circuit • ECM

Wiring Diagram

Refer to "Engine Control System Wiring Diagram" (Page 1A-6).

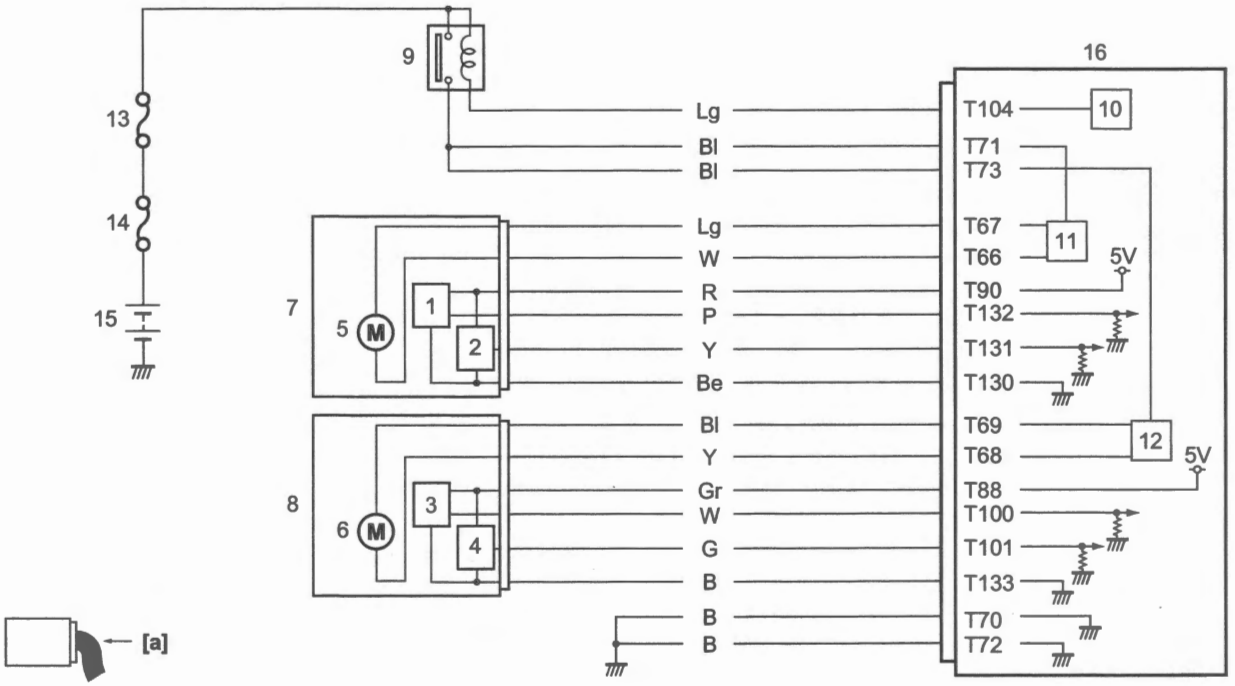

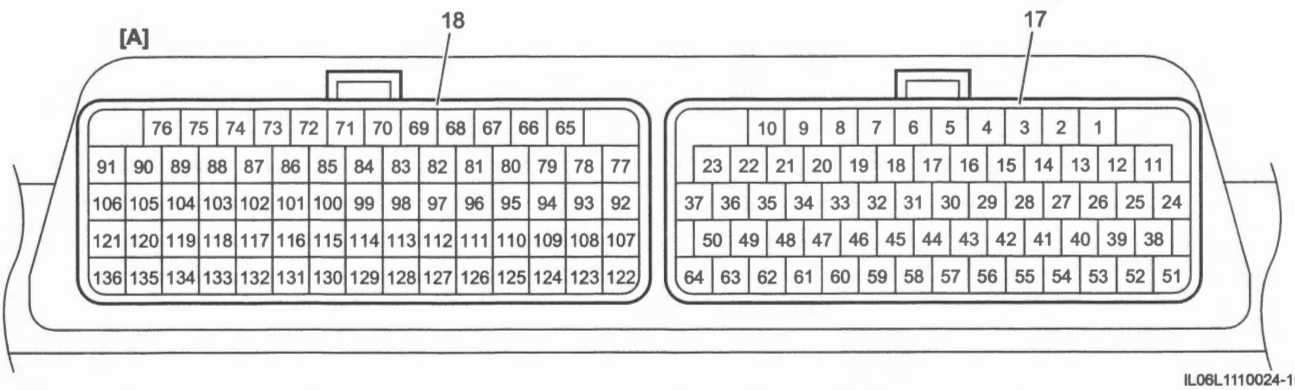

IL06L1110024-10

[A]: ECM coupler "T" (View [a])	7. Throttle body #1	14. Main fuse (30 A)
1. TP sensor #1 (main)	8. Throttle body #2	15. Battery
2. TP sensor #1 (sub)	9. Throttle valve motor relay	16. ECM
3. TP sensor #2 (main)	10. Throttle valve motor relay drive circuit	17. Coupler "A"
4. TP sensor #2 (sub)	11. Throttle valve motor #1 drive circuit	18. Coupler "B"
5. Throttle valve motor #1	12. Throttle valve motor #2 drive circuit	
6. Throttle valve motor #2	13. Fuel fuse (10 A)	

Troubleshooting

Step 1

DTC check

Is there any DTC(s) other than P210E (C86)?

Yes — Go to troubleshooting for applicable DTC.

No — Go to Step 2.

Step 2

TP sensor #2 circuit check

1) Check the TP sensor #2 circuit.
   - TP sensor #2 (main) circuit: Refer to "Step 1" – "Step 3" under "DTC P0225 / P0228 (C86)" (Page 1A-55)
   - TP sensor #2 (sub) circuit: Refer to "Step 1" – "Step 3" under "DTC P2130 / P2133 (C86)" (Page 1A-113)

Is check result OK?

Yes — Go to Step 3.

No — Repair or replace the defective wire harness.

Step 3

TP sensor #2 output voltage check

1) Measure the TP sensor #2 output voltage. ☞(Page 1C-7)

Is check result OK?

Yes — Replace the ECM and inspect it again. ☞(Page 1C-2)

No — Replace the throttle body #2. ☞(Page 1D-7)

DTC P2120 / P2123 (C14)

BENL06L21104048

DTC Detecting Condition and Trouble Area

DTC detecting condition	Trouble area
P2120 (C14): TP Sensor / Switch "D" Circuit Accelerator position sensor (main) output voltage is lower than 0.10 V. (1 D/C detection logic)	• Accelerator position sensor (main) • Accelerator position sensor (main) circuit • ECM
P2123 (C14): TP Sensor / Switch "D" Circuit High Accelerator position sensor (main) output voltage is higher than 3.80 V. (1 D/C detection logic)	

Wiring Diagram

Refer to "Engine Control System Wiring Diagram" (Page 1A-6).

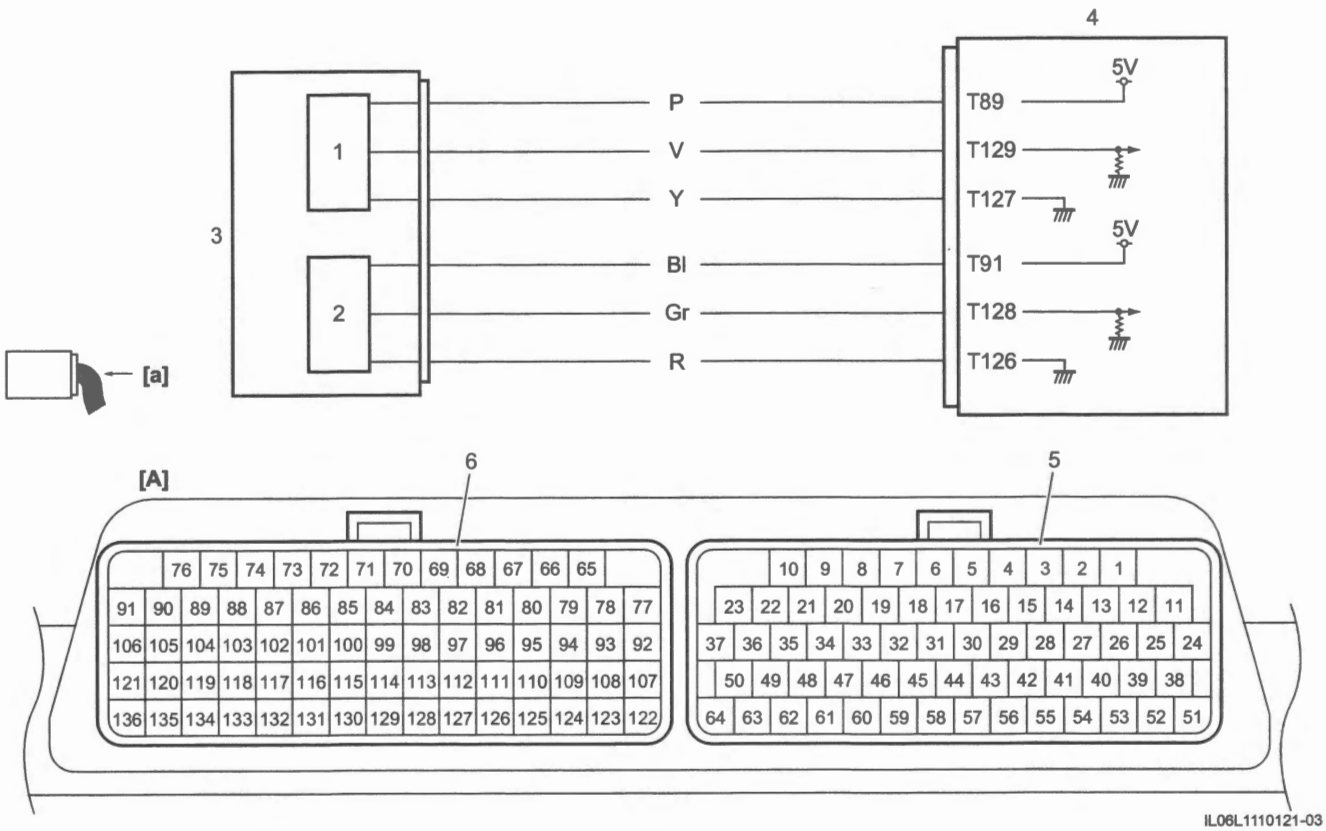

IL06L1110121-03

[A]: ECM coupler "T" (View [a])	3. Throttle grip assembly	6. Coupler "B"
1. Accelerator position sensor (main)	4. ECM	
2. Accelerator position sensor (sub)	5. Coupler "A"	

Troubleshooting

Step 1

Accelerator position sensor power supply circuit check

1) Turn the ignition switch OFF.
2) Disconnect the accelerator position sensor coupler (1). ☞(Page 1C-11)
3) Check for proper terminal connection to the accelerator position sensor coupler (1).
4) If connections are OK, turn the ignition switch ON.
5) Measure the voltage between the "T1" and "T2".

Accelerator position sensor power supply voltage
[Standard]: 4.5 – 5.5 V

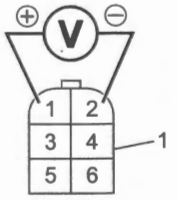

IL06L1110122-01

Is check result OK?

Yes Go to Step 3.

No Go to Step 2.

Step 2

Accelerator position sensor ground circuit check

1) Measure the voltage between the "T1" at the accelerator position sensor coupler (1) and ground.

Accelerator position sensor power supply voltage
[Standard]: 4.5 – 5.5 V

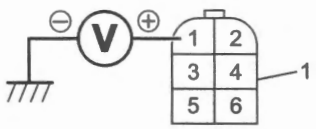

IL06L1110123-01

Is check result OK?

Yes Repair or replace the "T2" wire at the accelerator position sensor coupler.

No Repair or replace the "T1" wire at the accelerator position sensor coupler.

Step 3

Accelerator position sensor (main) signal circuit check

1) Turn the ignition switch OFF.
2) Disconnect the ECM coupler "B". ☞(Page 1C-2)
3) Check for proper terminal connection to the ECM coupler "B".
4) If connections are OK, check the following points.
   - Resistance
     – Between "T3" at the accelerator position sensor coupler (1) and "T129" at the ECM coupler "B" (2): less than 1 Ω

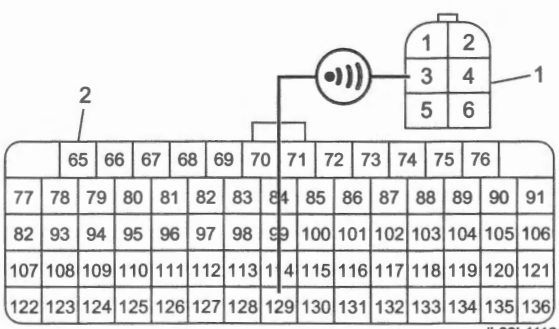

IL06L1110124-01

   – Between "T3" at the accelerator position sensor coupler (1) and ground: infinity

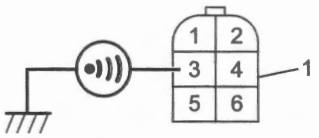

IL06L1110125-01

   – Between "T3" and other terminal (2) at the accelerator position sensor coupler (1): infinity

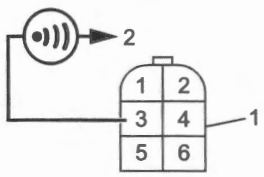

IL06L1110126-01

   - Voltage
     – Turn the ignition switch ON.
     – Between "T3" at the accelerator position sensor coupler (1) and ground: approx. 0 V

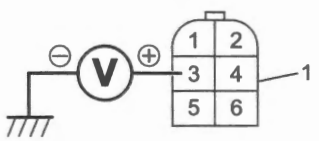

IL06L1110127-01

Is check result OK?

Yes Go to Step 4.

No Repair or replace the "T3" wire at the accelerator position sensor coupler.

Step 4

Accelerator position sensor (main) output voltage check

1) Measure the accelerator position sensor (main) output voltage. ☞(Page 1C-11)

Is check result OK?

Yes Replace the ECM and inspect it again. ☞(Page 1C-2)

No Replace the throttle grip assembly. ☞(Page 6B-6)

DTC P2125 / P2128 (C14)

BENL06L21104049

DTC Detecting Condition and Trouble Area

DTC detecting condition	Trouble area
P2125 (C14): TP Sensor / Switch "E" Circuit Accelerator position sensor (sub) output voltage is lower than 0.10 V. (1 D/C detection logic)	• Accelerator position sensor (sub) • Accelerator position sensor (sub) circuit • ECM
P2128 (C14): TP Sensor / Switch "E" Circuit High Accelerator position sensor (sub) output voltage is higher than 4.70 V. (1 D/C detection logic)	

Wiring Diagram

Refer to "Engine Control System Wiring Diagram" (Page 1A-6).

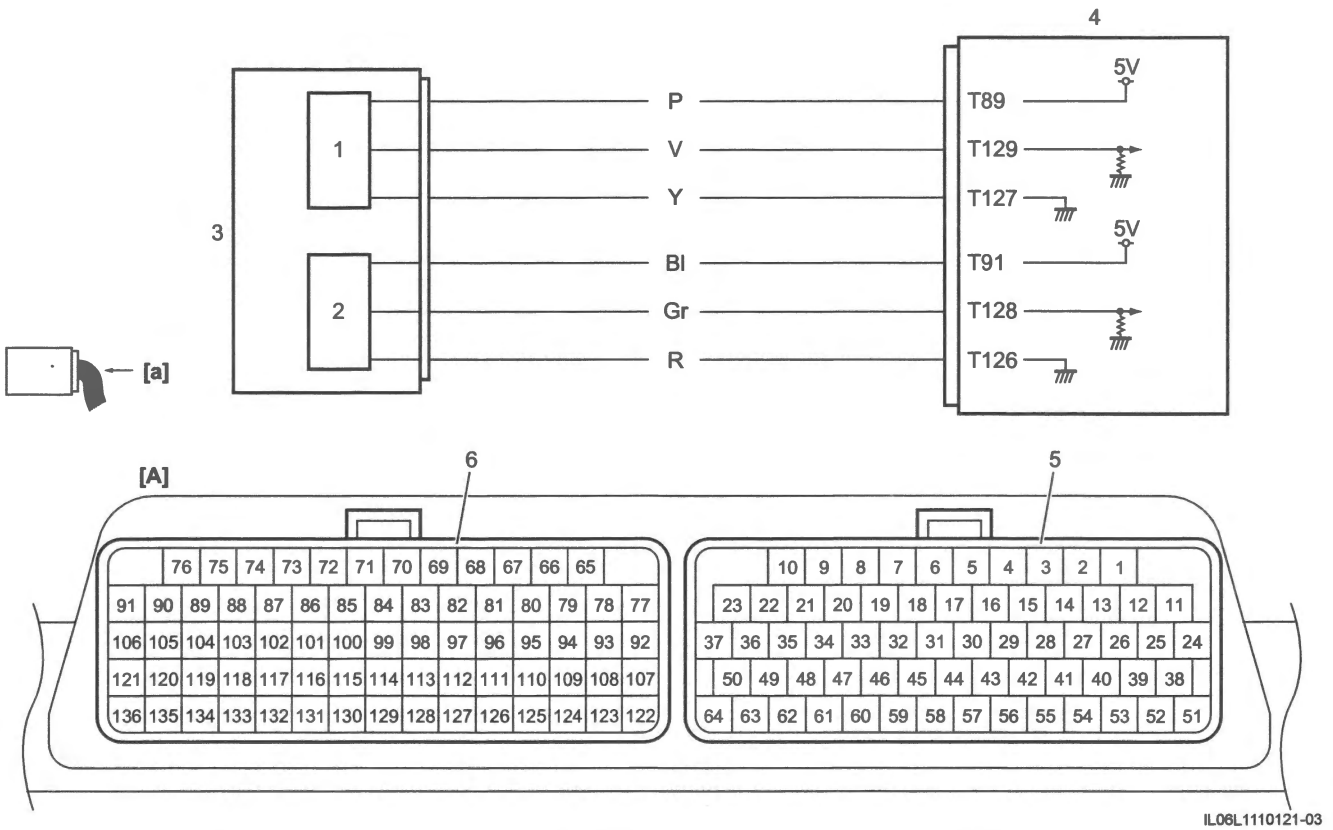

IL06L1110121-03

[A]: ECM coupler "T" (View [a])	3. Throttle grip assembly	6. Coupler "B"
1. Accelerator position sensor (main)	4. ECM	
2. Accelerator position sensor (sub)	5. Coupler "A"	

Troubleshooting

Step 1

Accelerator position sensor power supply circuit check

1) Turn the ignition switch OFF.
2) Disconnect the accelerator position sensor coupler (1). ☞(Page 1C-11)
3) Check for proper terminal connection to the accelerator position sensor coupler (1).
4) If connections are OK, turn the ignition switch ON.
5) Measure the voltage between the "T5" and "T6".

Accelerator position sensor power supply voltage

[Standard]: 4.5 – 5.5 V

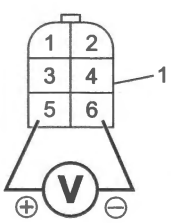

IL06L1110128-01

Is check result OK?

Yes Go to Step 3.

No Go to Step 2.

Step 2

Accelerator position sensor ground circuit check

1) Measure the voltage between the "T5" at the accelerator position sensor coupler (1) and ground.

Accelerator position sensor power supply voltage
[Standard]: 4.5 – 5.5 V

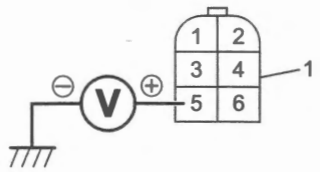

IL06L1110151-01

Is check result OK?

Yes Repair or replace the "T6" wire at the accelerator position sensor coupler.

No Repair or replace the "T5" wire at the accelerator position sensor coupler.

Step 3

Accelerator position sensor (main) signal circuit check

1) Turn the ignition switch OFF.
2) Disconnect the ECM coupler "B". ☞(Page 1C-2)
3) Check for proper terminal connection to the ECM coupler "B".
4) If connections are OK, check the following points.
   - Resistance
     – Between "T4" at the accelerator position sensor coupler (1) and "T128" at the ECM coupler "B" (2): less than 1 Ω

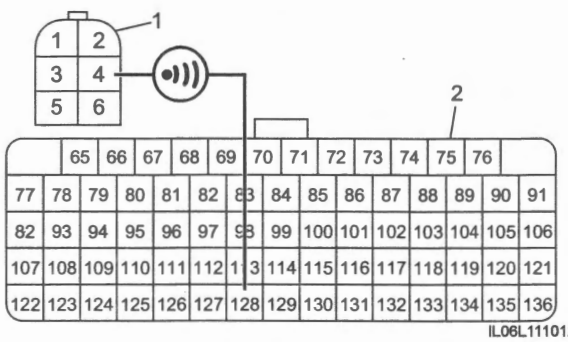

IL06L1110129-01

– Between "T4" at the accelerator position sensor coupler (1) and ground: infinity

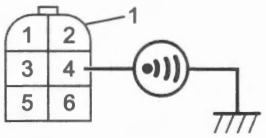

IL06L1110130-01

– Between "T4" and other terminal (2) at the accelerator position sensor coupler (1): infinity

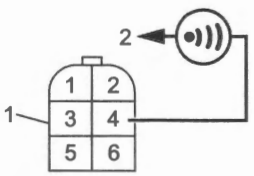

IL06L1110131-01

- Voltage
  – Turn the ignition switch ON.
  – Between "T4" at the accelerator position sensor coupler (1) and ground: approx. 0 V

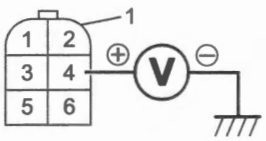

IL06L1110132-01

Is check result OK?

Yes Go to Step 4.

No Repair or replace the "T4" wire at the accelerator position sensor coupler.

Step 4

Accelerator position sensor (sub) output voltage check

1) Measure the accelerator position sensor (sub) output voltage. ☞(Page 1C-11)

Is check result OK?

Yes Replace the ECM and inspect it again. ☞(Page 1C-2)

No Replace the throttle grip assembly. ☞(Page 6B-6)

DTC P2130 / P2133 (C86)

BENL06L21104050

DTC Detecting Condition and Trouble Area

DTC detecting condition	Trouble area
P2130 (C86): Throttle / Pedal Position Sensor / Switch "F" Circuit TP sensor #2 (sub) output voltage is lower than 0.45 V. (1 D/C detection logic)	• TP sensor #2 (sub) • TP sensor #2 (sub) circuit • ECM
P2133 (C86): Throttle / Pedal Position Sensor / Switch "F" Circuit High TP sensor #2 (sub) output voltage is higher than 4.70 V. (1 D/C detection logic)	

Wiring Diagram

Refer to "Engine Control System Wiring Diagram" (Page 1A-6).

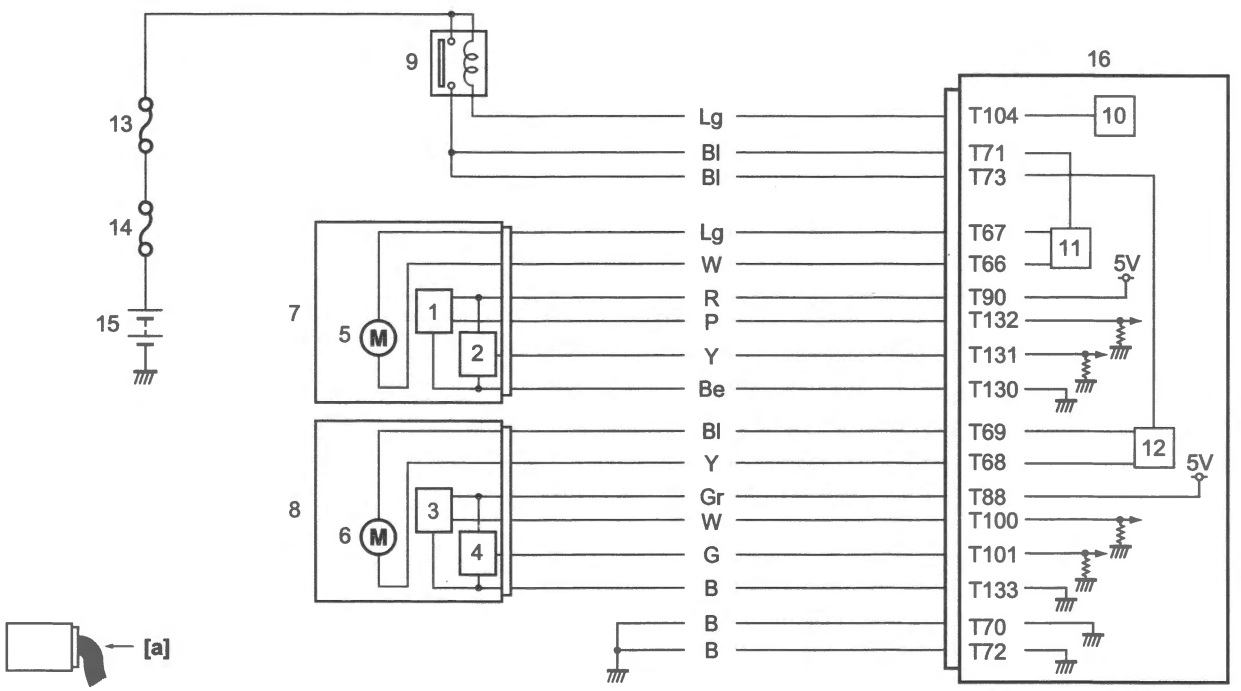

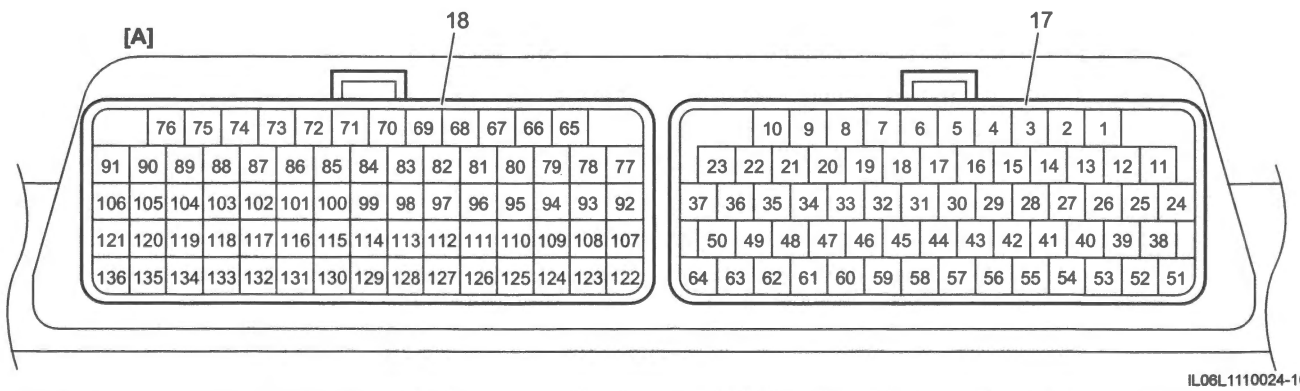

IL06L1110024-10

[A]: ECM coupler "T" (View [a])	7. Throttle body #1	14. Main fuse (30 A)
1. TP sensor #1 (main)	8. Throttle body #2	15. Battery
2. TP sensor #1 (sub)	9. Throttle valve motor relay	16. ECM
3. TP sensor #2 (main)	10. Throttle valve motor relay drive circuit	17. Coupler "A"
4. TP sensor #2 (sub)	11. Throttle valve motor #1 drive circuit	18. Coupler "B"
5. Throttle valve motor #1	12. Throttle valve motor #2 drive circuit	
6. Throttle valve motor #2	13. Fuel fuse (10 A)	

Troubleshooting

Step 1

TP sensor #2 power supply circuit check

1) Turn the ignition switch OFF.
2) Disconnect the throttle body #2 coupler (1). ☞(Page 1D-7)
3) Check for proper terminal connection to the throttle body #2 coupler (1).
4) If connections are OK, turn the ignition switch ON.
5) Measure the voltage between the "T2" and "T4".

TP sensor power supply voltage
[Standard]: 4.5 – 5.5 V

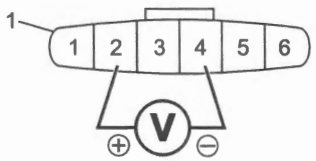

IL06L1110025-05

Is check result OK?

Yes Go to Step 3.

No Go to Step 2.

Step 2

TP sensor #2 ground circuit check

1) Measure the voltage between the "T2" at the throttle body #2 coupler (1) and ground.

TP sensor power supply voltage
[Standard]: 4.5 – 5.5 V

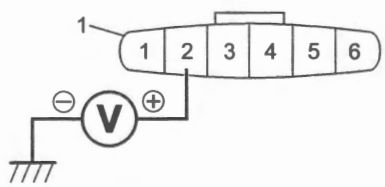

IL06L1110026-05

Is check result OK?

Yes Repair or replace the "T4" wire at the throttle body #2 coupler.

No Repair or replace the "T2" wire at the throttle body #2 coupler.

Step 3

TP sensor #2 (sub) signal circuit check

1) Turn the ignition switch OFF.
2) Disconnect the ECM coupler "B". ☞(Page 1C-2)
3) Check for proper terminal connection to the ECM coupler "B".
4) If connections are OK, check the following points.
   - Resistance
     - Between "T1" at the throttle body #2 coupler (1) and "T101" at the ECM coupler "B" (2): less than 1 Ω

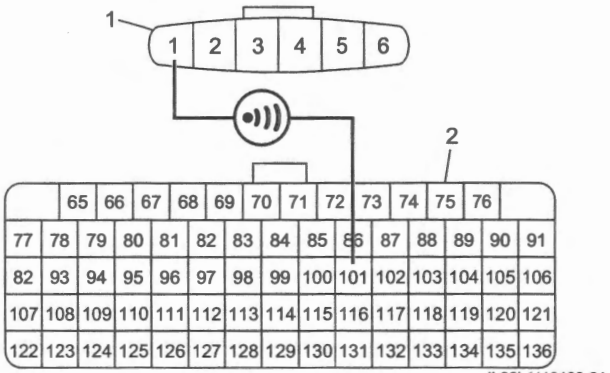

IL06L1110133-01

     - Between "T1" at the throttle body #2 coupler (1) and ground: infinity

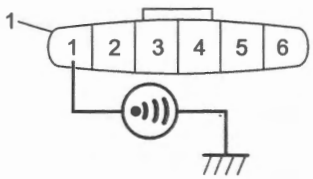

IL06L1110036-02

     - Between "T1" and other terminal at the throttle body #2 coupler (1): infinity

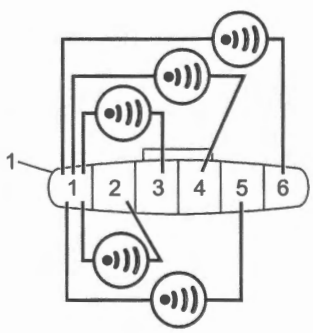

IL06L1110037-02

   - Voltage
     - Turn the ignition switch ON.
     - Between "T1" at the throttle body #2 coupler (1) and ground: approx. 0 V

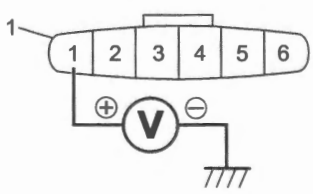

IL06L1110038-02

Is check result OK?

Yes Go to Step 4.

No Repair or replace the "T1" wire at the throttle body #2 coupler.

Step 4

TP sensor #2 (sub) output voltage check

1) Measure the TP sensor #2 (sub) output voltage. ☞(Page 1C-7)

Is check result OK?

Yes	Replace the ECM and inspect it again. ☞(Page 1C-2)
No	Replace the throttle body #2. ☞(Page 1D-7)

DTC P2135 (C29)

BENL06L21104051

DTC Detecting Condition and Trouble Area

DTC detecting condition	Trouble area
P2135 (C29): Throttle / Pedal Position Sensor / Switch "A" / "B" Voltage Correlation Difference between TP sensor #1 (main) value and TP sensor #1 (sub) value is out of the specified range. (1 D/C detection logic)	• TP sensor #1 • TP sensor #1 circuit • ECM

Wiring Diagram

Refer to "Engine Control System Wiring Diagram" (Page 1A-6).

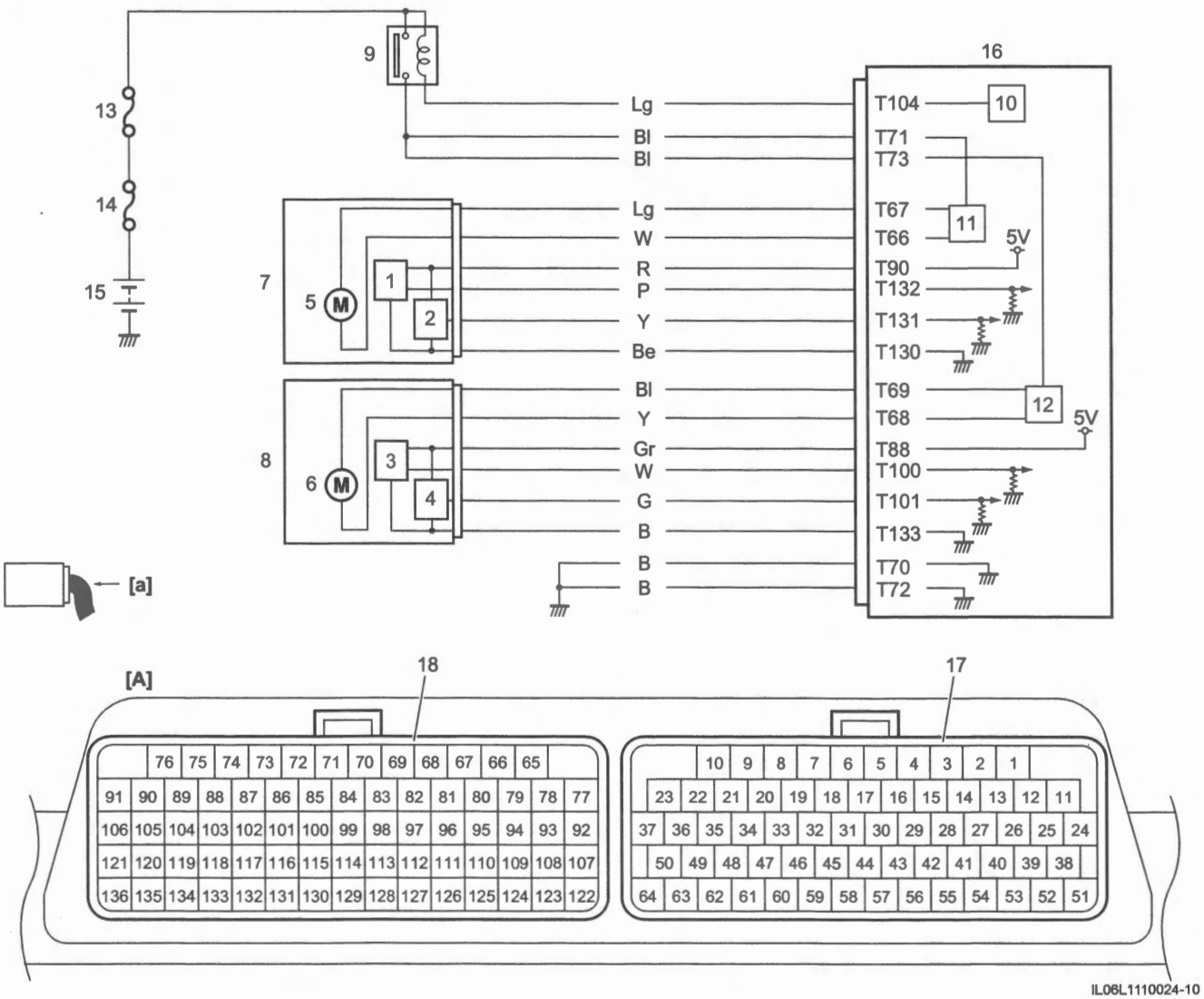

IL06L1110024-10

[A]: ECM coupler "T" (View [a])	7. Throttle body #1	14. Main fuse (30 A)
1. TP sensor #1 (main)	8. Throttle body #2	15. Battery
2. TP sensor #1 (sub)	9. Throttle valve motor relay	16. ECM
3. TP sensor #2 (main)	10. Throttle valve motor relay drive circuit	17. Coupler "A"
4. TP sensor #2 (sub)	11. Throttle valve motor #1 drive circuit	18. Coupler "B"
5. Throttle valve motor #1	12. Throttle valve motor #2 drive circuit	
6. Throttle valve motor #2	13. Fuel fuse (10 A)	

Troubleshooting

Step 1

DTC check

Is there any DTC(s) other than P2135 (C29)?

Yes — Go to troubleshooting for applicable DTC.

No — Go to Step 2.

Step 2

TP sensor #1 circuit check

1) Check the TP sensor #1 circuit.
   - TP sensor #1 (main) circuit: Refer to "Step 1" – "Step 3" under "DTC P0120 / P0123 (C29)" (Page 1A-41)
   - TP sensor #1 (sub) circuit: Refer to "Step 1" – "Step 3" under "DTC P0220 / P0223 (C29)" (Page 1A-52)

Is check result OK?

Yes — Go to Step 3.

No — Repair or replace the defective wire harness.

Step 3

TP sensor #1 output voltage check

1) Measure the TP sensor #1 output voltage. ☞(Page 1C-7)

Is check result OK?

Yes — Replace the ECM and inspect it again. ☞(Page 1C-2)

No — Replace the throttle body #1. ☞(Page 1D-7)

DTC P2138 (C14)

BENL06L21104052

DTC Detecting Condition and Trouble Area

DTC detecting condition	Trouble area
P2138 (C14): Throttle / Pedal Position Sensor / Switch "D" / "E" Voltage Correlation Difference between Accelerator position sensor (main) value and Accelerator position sensor (sub) value is out of the specified range. (1 D/C detection logic)	• Accelerator position sensor • Accelerator position sensor circuit • ECM

Wiring Diagram

Refer to "Engine Control System Wiring Diagram" (Page 1A-6).

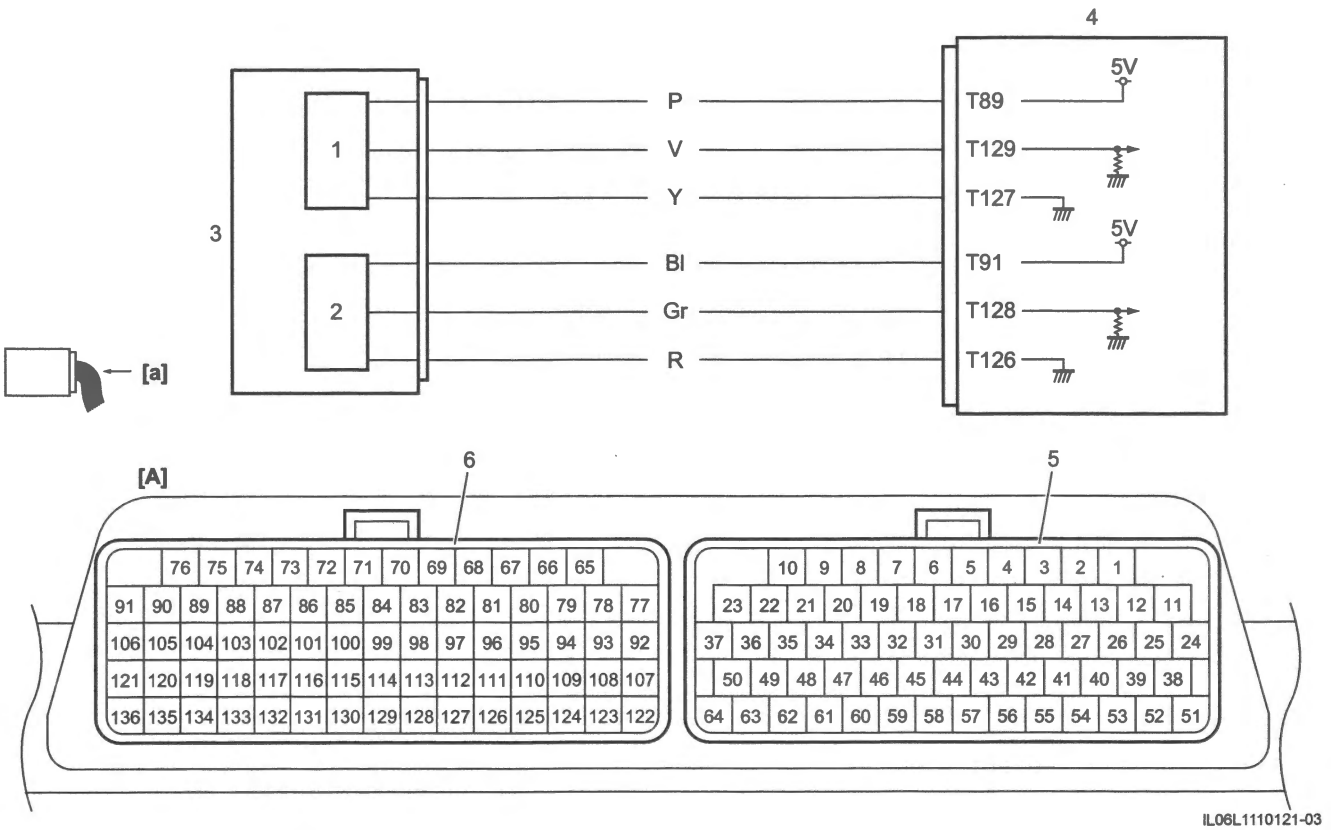

IL06L1110121-03

[A]: ECM coupler "T" (View [a])	3. Throttle grip assembly	6. Coupler "B"
1. Accelerator position sensor (main)	4. ECM	
2. Accelerator position sensor (sub)	5. Coupler "A"	

Troubleshooting

Step 1

DTC check

Is there any DTC(s) other than P2138 (C14)?

Yes — Go to troubleshooting for applicable DTC.

No — Go to Step 2.

Step 2

Accelerator position sensor circuit check

1) Check the accelerator position sensor circuit.
   - Accelerator position sensor (main) circuit: Refer to "Step 1" – "Step 3" under "DTC P2120 / P2123 (C14)" (Page 1A-109)
   - Accelerator position sensor (sub) circuit: Refer to "Step 1" – "Step 3" under "DTC P2125 / P2128 (C14)" (Page 1A-111)

Is check result OK?

Yes — Go to Step 3.

No — Repair or replace the defective wire harness.

Step 3

Accelerator position sensor output voltage check

1) Measure the accelerator position sensor output voltage. ☞(Page 1C-11)

Is check result OK?

Yes — Replace the ECM and inspect it again. ☞(Page 1C-2)

No — Replace the throttle grip assembly. ☞(Page 6B-6)

DTC P2158 (C91)

BENL06L21104053

DTC Detecting Condition and Trouble Area

DTC detecting condition	Trouble area
P2158 (C91): Vehicle Speed Sensor "B" Any of the following conditions is met, at motorcycle deceleration. • Rear wheel speed is 0 km/h (0 mile/h) for 6 seconds or more, at motorcycle deceleration. • Rear wheel speed is 0 km/h (0 mile/h) for 3 sec or more although the front wheel speed is higher than 10km/h (6 mile/h). • Rear wheel speed signal does not become stable. (3 D/C detection logic)	• Rear wheel speed sensor • Rear wheel speed sensor circuit • ABS control unit / HU • ECM

Wiring Diagram

Refer to "Engine Control System Wiring Diagram" (Page 1A-6).

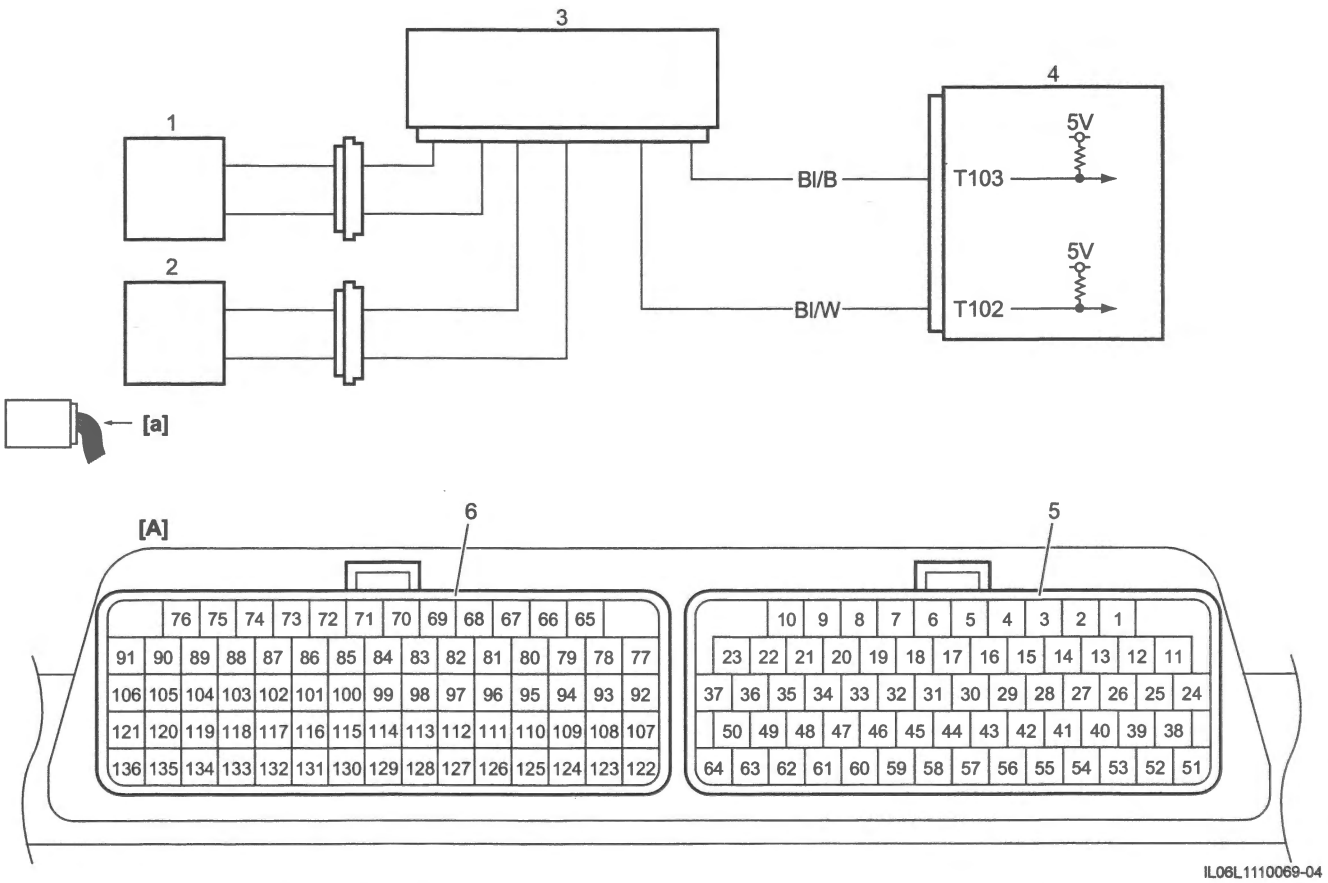

IL06L1110069-04

[A]: ECM coupler "T" (View [a])	3. ABS control unit / HU	8. Coupler "B"
1. Front wheel speed sensor	5. ECM	
2. Rear wheel speed sensor	6. Coupler "A"	

Troubleshooting

Step 1

ABS DTC check.

1) Check that DTC is detected in ABS. ☞(Page 4E-14)

Is the DTC detected?

Yes — Go to troubleshooting for DTCs. Refer to "DTC Table" in Section 4E (Page 4E-19).

No
- Without motion track brake system: Go to Step 2
- With motion track brake system: Go to Step 3

Step 2

Speed sensor signal circuit check (From ABS control unit to ECM)

1) Turn the ignition switch OFF.
2) Disconnect the ECM coupler "B" and ABS control unit / HU coupler.
   - ECM coupler "B": ☞(Page 1C-2)
   - ABS control unit / HU coupler: ☞(Page 4E-54)
3) Check for proper terminal connection to the ECM coupler "B" and ABS control unit / HU coupler.
4) If connections are OK, check the following points.
   - Resistance
     - **Without motion track brake system:** Between "T11" at the ABS control unit / HU coupler (1) and "T102" at the ECM coupler "B" (2): less than 1 Ω

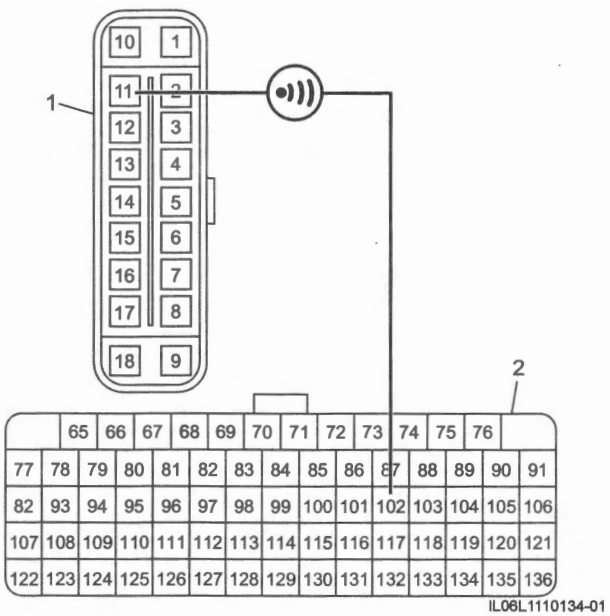

IL06L1110134-01

- **With motion track brake system:** Between "T19" at the ABS control unit / HU coupler (1) and "T102" at the ECM coupler "B" (2): less than 1 Ω

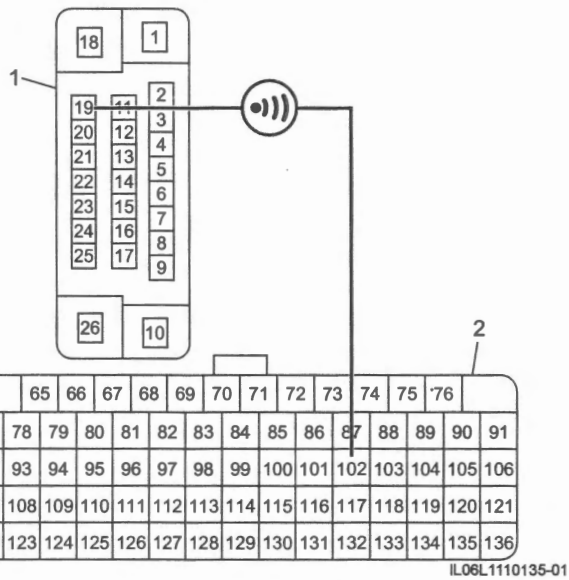

IL06L1110135-01

- Between "T102" at the ECM coupler "B" (1) and ground: infinity

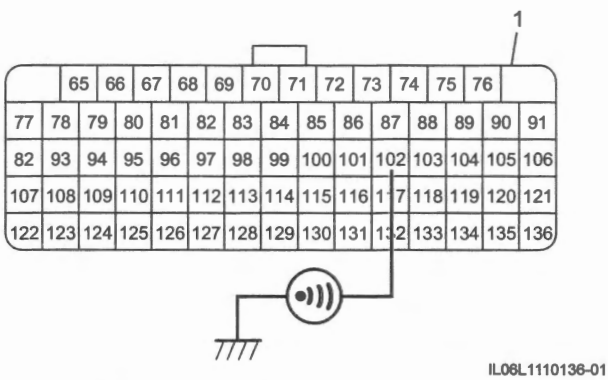

IL06L1110136-01

- Between "T102" and other terminal (1) at ECM coupler "B" (2): infinity

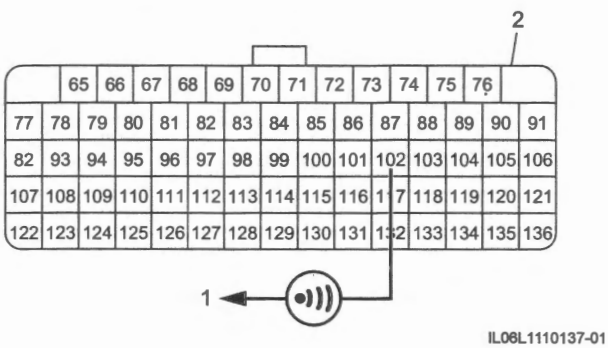

IL06L1110137-01

- Voltage
  - Turn the ignition switch ON.
  - Between "T102" at the ECM coupler "B" (1) and ground: approx. 0 V

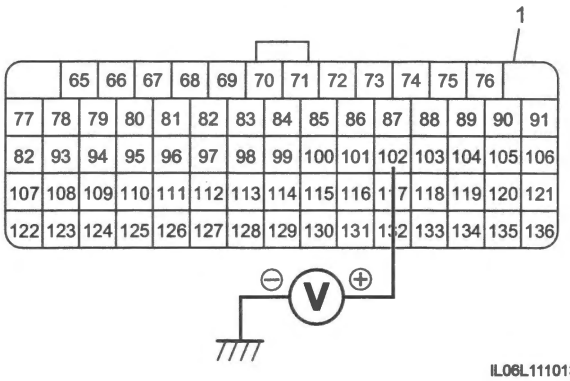

IL06L1110138-01

Is check result OK?

Yes	Replace the ECM and inspect it again. ☞(Page 1C-2) If this DTC is detected again, replace the ABS control unit / HU and recheck DTC.
No	Repair or replace the "T102" wire at the ECM coupler "B".

DTC P2505 (C00)

BENL06L21104054

DTC Detecting Condition and Trouble Area

DTC detecting condition	Trouble area
P2505 (C00): ECM Power Input Signal Power source for ECM is not supplied. (3 D/C detection logic)	• ECM back-up power supply circuit • Fuel fuse (10 A) • ECM

Wiring Diagram

Refer to "Engine Control System Wiring Diagram" (Page 1A-6).

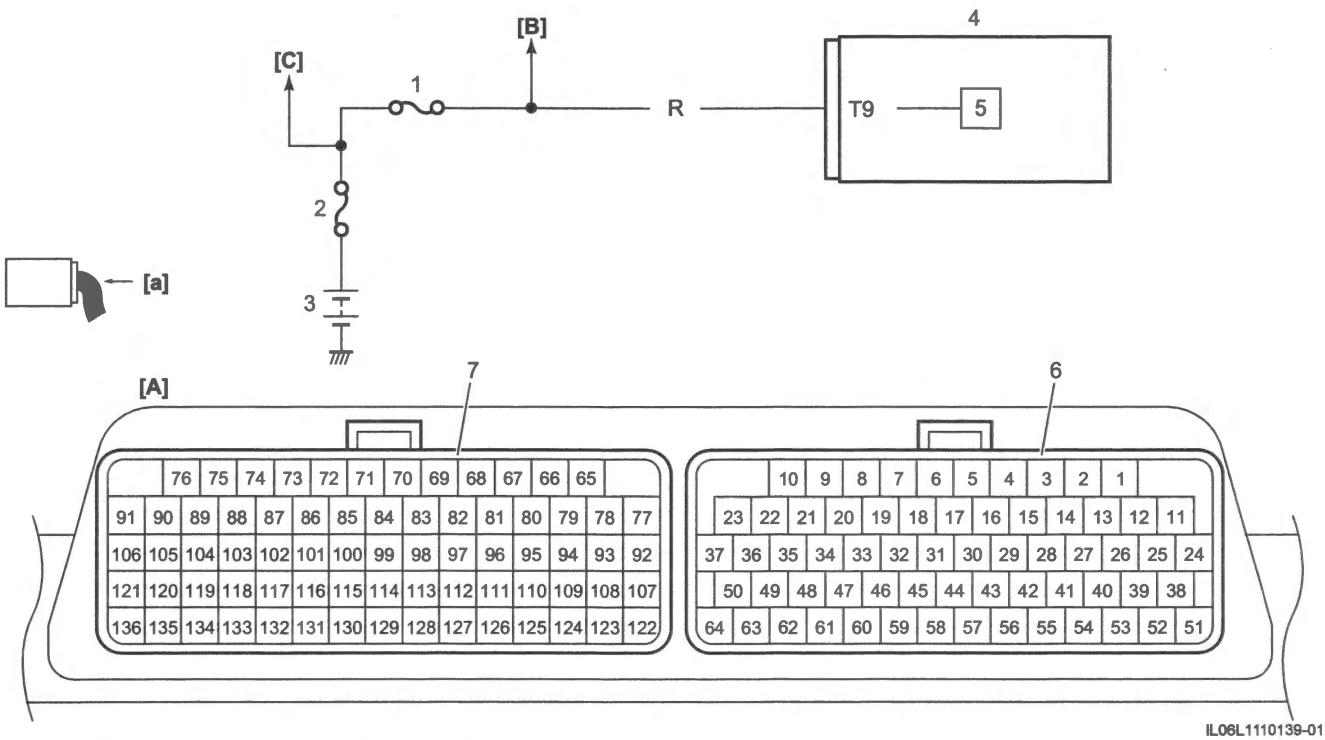

IL06L1110139-01

[A]: ECM coupler "T" (View [a])	2. Main fuse (30 A)	6. Coupler "A"
[B]: To relay box	3. Battery	7. Coupler "B"
[C]: To ignition switch and cooling fan fuse (15 A)	4. ECM	
1. Fuel fuse (10 A)	5. Power supply circuit	

Troubleshooting

Step 1

ECM power supply voltage check

1) Turn the ignition switch OFF.
2) Disconnect the ECM coupler "A". ☞(Page 1C-2)
3) Check for proper terminal connection to the ECM coupler "A".
4) If connections are OK, measure the voltage between "T9" at the ECM coupler "A" (1) and ground.

ECM power supply voltage
[Standard]: Battery voltage

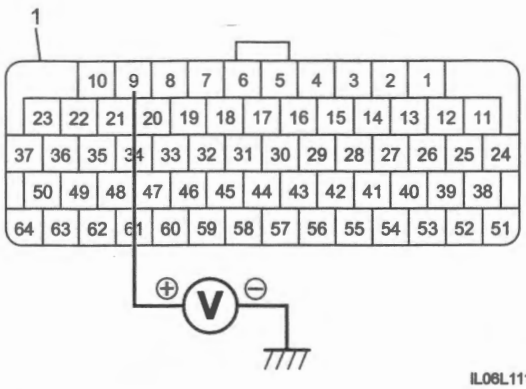

IL06L1110140-02

Is check result OK?

Yes — Replace the ECM and inspect it again. ☞(Page 1C-2)

No — Check fuel fuse (10 A) for blowout.

- If fuel fuse (10 A) is not blown, check "T9" wire at the ECM coupler "A" for open.
- If fuel fuse (10 A) is blown, check "T9" wire at the ECM coupler "A" for open and short circuit to ground.

DTC P2A00 (C44)

BENL06L21104055

DTC Detecting Condition and Trouble Area

DTC detecting condition	Trouble area
P2A00 (C44): O2 Sensor Circuit Range / Performance Bank 1 Sensor 1 HO2 sensor output voltage is stayed for specified time or more. (1 D/C detection logic)	• Air intake system • Exhaust system • HO2 sensor • HO2 sensor circuit • ECM

Wiring Diagram

Refer to "Engine Control System Wiring Diagram" (Page 1A-6).

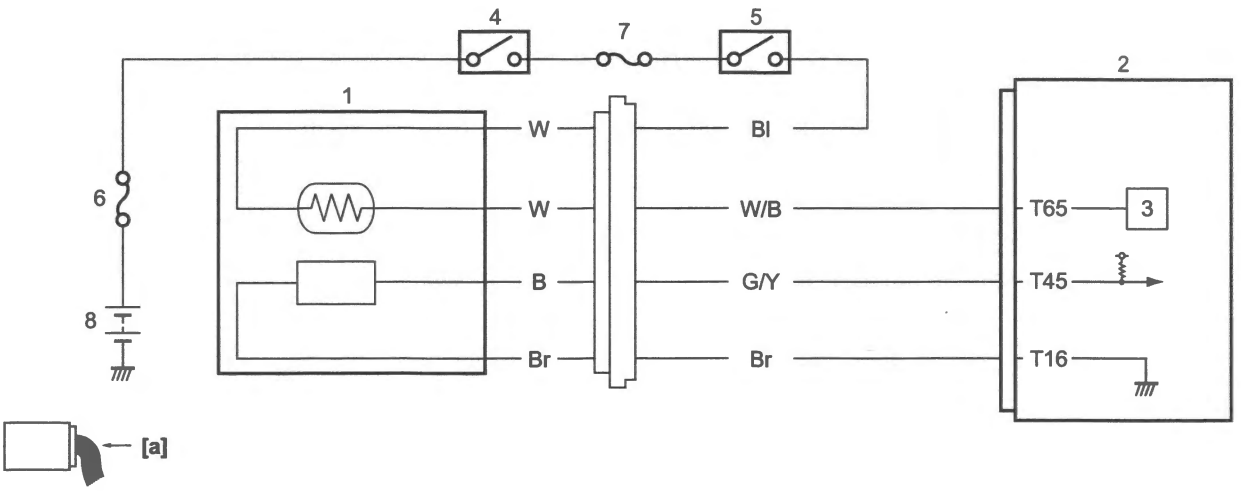

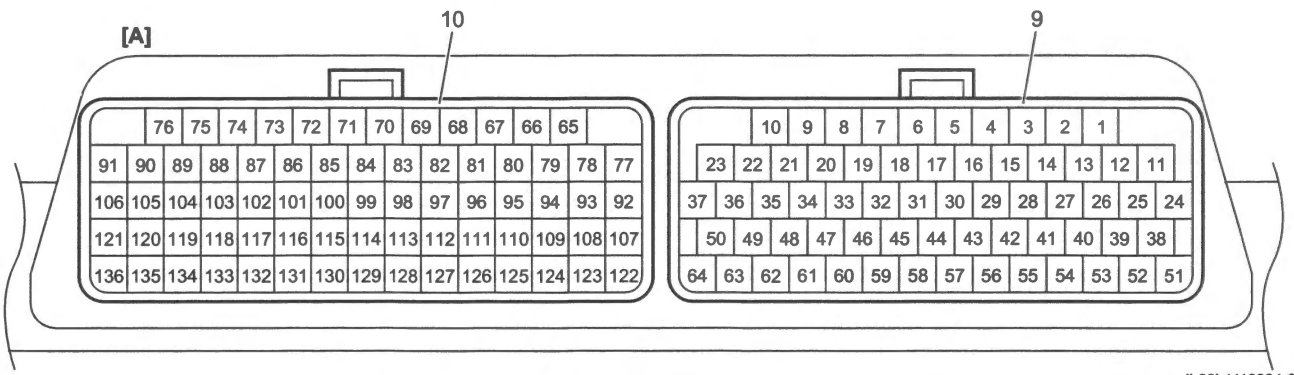

IL06L1110004-08

[A]: ECM coupler "T" (View [a])	4. Ignition switch	8. Battery
1. ECM	5. Engine stop / starter switch ("RUN / STOP" position)	9. Coupler "A"
2. HO2 sensor	6. Main fuse (30 A)	10. Coupler "B"
3. HO2 sensor heater drive circuit	7. Ignition fuse (10 A)	

Troubleshooting

Step 1
DTC check

Is there any DTC(s) other than P2A00 (C44)?

Yes — Go to troubleshooting for applicable DTC.

No — Go to Step 2.

Step 2
Exhaust system and air intake system check

1) Turn the ignition switch OFF.
   - Exhaust system: ☞(Page 1K-7)
   - Check air intake system for clogging and leakage.

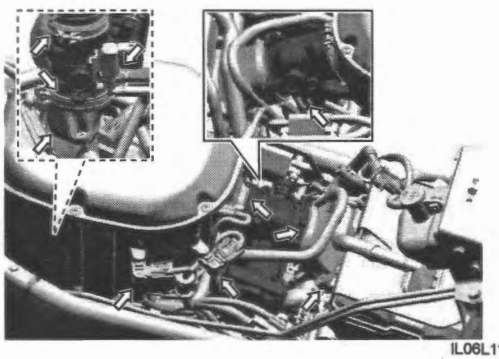

IL06L1110153-03

Is check result OK?

Yes — Go to Step 3.

No — Repair or replace defective parts.

Step 3
HO2 sensor signal circuit check

1) Check HO2 sensor signal circuit. Refer to "Step 1" under "DTC P0130 / P0132 / P0133 (C44)" (Page 1A-44).

Is check result OK?

Yes — Go to Step 4.

No — Repair or replace the defective wire harness.

Step 4
HO2 sensor signal circuit check

1) Check HO2 sensor signal circuit. Refer to "Step 1" – "Step 2" under "DTC P0030 (C44)" (Page 1A-32).

Is check result OK?

Yes — Go to Step 5.

No — Repair or replace the defective wire harness.

Step 5
DTC recheck

1) Replace the HO2 sensor. ☞(Page 1C-8)
2) Perform "DTC Check" (Page 1A-11) and recheck DTC.

Is DTC P2A00 (C44) still detected?

Yes — Replace the ECM and inspect it again. ☞(Page 1C-2)

No — End.

DTC U0073 (C83)

BENL06L21104056

Refer to "Troubleshooting for Communication Bus Off" in Section 10H (Page 10H-15).

DTC U0121 (C83)

BENL06L21104057

Refer to "Troubleshooting for Lost Communication" in Section 10H (Page 10H-10).

DTC U0123 (C83)

BENL06L21104058

Refer to "Troubleshooting for Lost Communication" in Section 10H (Page 10H-10).

DTC U0155 (C83)

BENL06L21104059

Refer to "Troubleshooting for Lost Communication" in Section 10H (Page 10H-10).

Engine Control System Circuits Inspection

BENL06L21104060

Refer to "Precautions for Electrical Circuit Service" in Section 00 (Page 00-2).
Refer to "Precautions for Circuit Tester" in Section 00 (Page 00-8).

Voltage and Signal Check

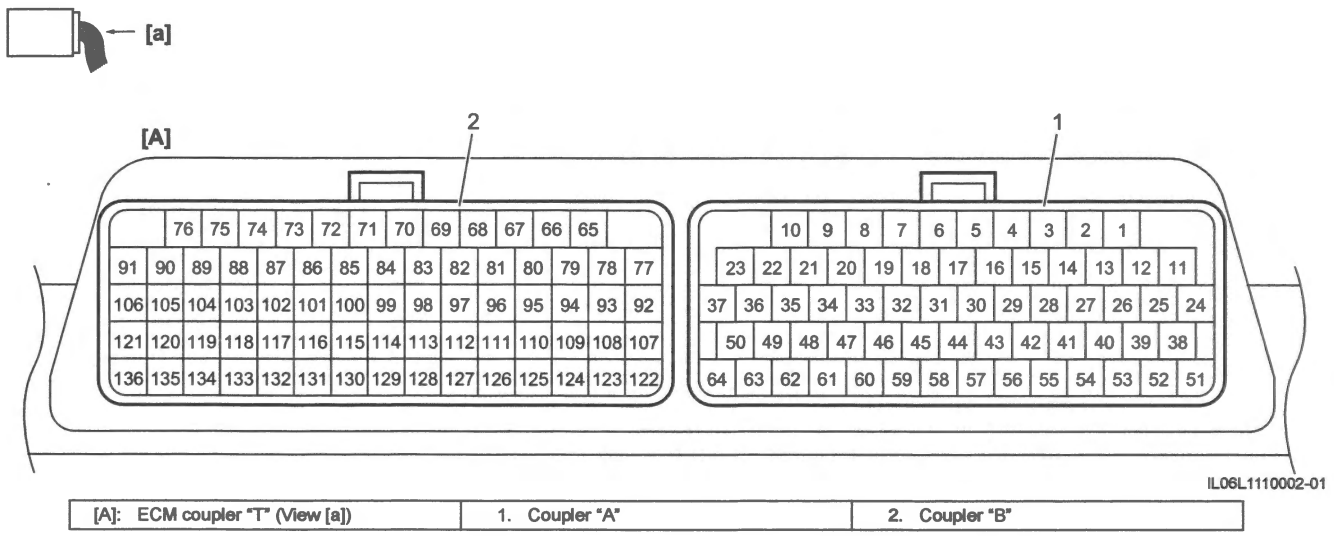

IL06L1110002-01

[A]: ECM coupler "T" (View [a])	1. Coupler "A"	2. Coupler "B"

ECM terminal standard voltage table (reference)

NOTICE

Failure to observe "Precautions for Electrical Circuit Service" and "Precautions for Circuit Tester" may cause damage to motorcycle or parts when measuring voltage.
Read "Precautions for Electrical Circuit Service" in Section 00 (Page 00-2) and "Precautions for Circuit Tester" in Section 00 (Page 00-8) before starting the operations described below and follow all of the instructions provided.

NOTE

- **As each terminal voltage is affected by battery voltage, check that battery voltage is 12 V or more when ignition switch is "ON".**
- **Voltage with asterisk (*) cannot be measured with voltmeter because it is pulse signal. Use oscilloscope for its check.**

Terminal No.	Wire color	Circuit	Normal voltage	Condition
T1*	Y	Ignition coil #12	Approx. 0 V ↑↓ Approx. 12 – 14 V	Engine: Running
T2*	B/Bl	Ignition coil #21	Approx. 0 V ↑↓ Approx. 12 – 14 V	Engine: Running
T3*	G	Ignition coil #22	Approx. 0 V ↑↓ Approx. 12 – 14 V	Engine: Running
T4	—	—	—	—
T5	—	—	—	—
T6	B/Y	Starter relay	Approx. 12 V	Ignition switch: ON
			Approx. 0 V	Starter motor: Running
T7	—	—	—	—
T8	B	Power source	Battery voltage	Ignition switch: ON
			Approx. 0 V	Ignition switch: OFF
T9	R	Power source for back-up	Battery voltage	Any condition
T10	B	Control circuit ground (E1)	Approx. 0 V	Any condition
T11*	W/Bl	Ignition coil #11	Approx. 0 V ↑↓ Approx. 12 – 14 V	Engine: Running
T12	B	General power ground (E01)	Approx. 0 V	Any condition
T13	B	Ignition system ground (E02)	Approx. 0 V	Any condition
T14	W/R	Mode select coupler (6P)	Approx. 5 V	• Ignition switch: ON • Mode select switch: OFF
			Approx. 0 V	• Ignition switch: ON • Mode select switch: ON
T15	G	Starter switch signal	Approx. 12 V	• Engine stop / starter switch ("START" position): Pushed • Ignition switch: ON
			Approx. 0 V	Engine stop / starter switch: Other than "START" position
T16	Br	Sensor ground (E2)	Approx. 0 V	Any condition
T17	—	—	—	—

Terminal No.	Wire color	Circuit	Normal voltage	Condition
T18	G	EVAP system purge control solenoid valve	Approx. 12 V	Ignition switch: ON
			Approx. 0 V	• Ignition switch: ON • EVAP system purge control solenoid valve: ON (EVAP system purge control solenoid valve is operated using "EVAP purge valve operating control" on "Active control" of SDS-II.)
T19	—	—	—	—
T20	—	—	—	—
T21	—	—	—	—
T22	R	Power source for sensors	Approx. 5 V	Ignition switch: ON
			Approx. 0 V	Ignition switch: OFF
T23	Lbl	Power source for sensors	Approx. 5 V	Ignition switch: ON
			Approx. 0 V	Ignition switch: OFF
T24	—	—	—	—
T25	W	Side-stand switch signal	Approx. 12 V	• Ignition switch: ON • Side-stand: On the ground
			Approx. 0 V	• Ignition switch: ON • Side-stand: Retracted
T26	—	—	—	—
T27	—	—	—	—
T28	—	—	—	—
T29	—	—	—	—
T30	—	—	—	—
T31	—	—	—	—
T32	—	—	—	—
T33	Bl	Neutral signal	Approx. 12 V	• Ignition switch: ON • Gear position: Other than neutral
			Approx. 0 V	• Ignition switch: ON • Gear position: Neutral
T34	—	—	—	—
T35	P	"RES / UP" switch signal	Approx. 12 V	• Ignition switch: ON • "RES / UP" switch: OFF
			Approx. 0 V	• Ignition switch: ON • "RES / UP" switch: ON ("RES / UP" switch kept pushed)
T36	Gr	"SET / DOWN" switch signal	Approx. 12 V	• Ignition switch: ON • "SET / DOWN" switch: OFF
			Approx. 0 V	• Ignition switch: ON • "SET / DOWN" switch: ON ("SET / DOWN" switch kept pushed)
T37	—	—	—	—
T38	—	—	—	—
T39	—	—	—	—
T40	P	GP switch signal	Approx. 1.71 – 1.89 V	Gear position: 1st
			Approx. 2.15 – 2.37 V	Gear position: 2nd
			Approx. 2.85 – 3.15 V	Gear position: 3rd
			Approx. 3.48 – 3.84 V	Gear position: 4th
			Approx. 4.23 – 4.49 V	Gear position: 5th
			Approx. 4.56 – 4.82 V	Gear position: 6th

Terminal No.	Wire color	Circuit	Normal voltage	Condition
T41	—	—	—	—
T42	—	—	—	—
T43	—	—	—	—
T44	—	—	—	—
T45*	G/Y	HO2 sensor signal	Approx. 1 V ↑↓ Approx. 0 V	Engine: Idle speed after warming up
T46	—	—	—	—
T47	Y	Clutch lever position switch signal	Approx. 12 V	Clutch lever position switch: OFF (Clutch lever is released)
			Approx. 0 V	• Clutch lever position switch: ON (Clutch lever is grasped) • Ignition switch: ON
T48	Be	Cruise control switch signal (If equipped)	Approx. 5 V	• Ignition switch: ON • Cruise control switch: OFF
			Approx. 0 V	• Ignition switch: ON • Cruise control switch: ON (Cruise control switch kept pushed)
T49	—	—	—	—
T50	Br	TO sensor signal	Approx. 0.4 – 1.4 V	• Ignition switch: ON • Motorcycle condition: Normal
			Approx. 3.7 – 4.4 V	• Ignition switch: ON • Motorcycle condition: Leaning 45°
T51	R/Bl	Immobilizer indicator (If equipped)	Approx. 12 V	• Ignition switch: ON • Immobilizer indicator: OFF
			Approx. 0 V	• Ignition switch: ON • Immobilizer indicator: ON
T52	—	—	—	—
T53	B/Bl	ECT sensor signal	Approx. 3.4 V	• Ignition switch: ON • ECT: 0 °C (32 °F)
			Approx. 2.4 V	• Ignition switch: ON • ECT: 20 °C (68 °F)
			Approx. 0.5 V	• Ignition switch: ON • ECT: 80 °C (176 °F)
T54	—	—	—	—
T55	Lg	IAT sensor signal	Approx. 3.3 V	• Ignition switch: ON • IAT: 0 °C (32 °F)
			Approx. 2.3 V	• Ignition switch: ON • IAT: 20 °C (68 °F)
			Approx. 0.5 V	• Ignition switch: ON • IAT: 80 °C (176 °F)
T56	—	—	—	—
T57	Gr	IAP sensor #2 signal	Approx. 3.4 – 4.0 V	• Ignition switch: ON • Engine: Stopped • Barometric pressure: 100 kPa, 760 mmHg
			Approx. 0.79 – 3.16 V	• Engine: Idle speed after warming up • Barometric pressure: 100 kPa, 760 mmHg

Terminal No.	Wire color	Circuit	Normal voltage	Condition
T58	V	IAP sensor #1 signal	Approx. 3.4 – 4.0 V	• Ignition switch: ON • Engine: Stopped • Barometric pressure: 100 kPa, 760 mmHg
			Approx. 0.79 – 3.16 V	• Engine: Idle speed after warming up • Barometric pressure: 100 kPa, 760 mmHg
T59	W	CKP sensor signal (–)	Approx. 0 V	Any condition
T60*	G/Bl	CKP sensor signal (+)	Approx. 18 V ↑↓ Approx. -18 V	Engine: Idle speed after warming up
T61	—	—	—	—
T62	—	—	—	—
T63*	G	CAN signal (Low)	Approx. 2.5 V ↑↓ Approx. 1.5 V	Ignition switch: ON
T64*	Bl	CAN signal (High)	Approx. 3.5 V ↑↓ Approx. 2.5 V	Ignition switch: ON
T65	W/B	HO2 sensor heater	Approx. 12 V	Ignition switch: ON
			Approx. 0 V	Ignition switch: OFF
T66*	W	Throttle valve motor #1 (close)	Approx. 12 V ↑↓ Approx. 0 V	• Ignition switch: ON • Throttle grip: Fully closed position
			Approx. 0 V	• Ignition switch: ON • Throttle grip: Fully opened position
T67*	Lg	Throttle valve motor #1 (open)	Approx. 0 V	• Ignition switch: ON • Throttle grip: Fully closed position
			Approx. 12 V ↑↓ Approx. 0 V	• Ignition switch: ON • Throttle grip: Fully opened position
T68*	Y	Throttle valve motor #2 (close)	Approx. 12 V ↑↓ Approx. 0 V	• Ignition switch: ON • Throttle grip: Fully closed position
			Approx. 0 V	• Ignition switch: ON • Throttle grip: Fully opened position
T69*	Bl	Throttle valve motor #2 (open)	Approx. 0 V	• Ignition switch: ON • Throttle grip: Fully closed position
			Approx. 12 V ↑↓ Approx. 0 V	• Ignition switch: ON • Throttle grip: Fully opened position
T70	B	Throttle valve motor #1 ground	Approx. 0 V	Any condition
T71	Bl	Power source for throttle valve motor #1	Approx. 12 V	Ignition switch: ON
			Approx. 0 V	Ignition switch: OFF
T72	B	Throttle valve motor #2 ground	Approx. 0 V	Any condition
T73	Bl	Power source for throttle valve motor #2	Approx. 12 V	Ignition switch: ON
			Approx. 0 V	Ignition switch: OFF
T74	—	—	—	—
T75	—	—	—	—
T76	—	—	—	—

Terminal No.	Wire color	Circuit	Normal voltage	Condition
T77	G	PAIR control solenoid valve	Approx. 12 V	Ignition switch: ON
			Approx. 0 V	• Ignition switch: ON • PAIR control solenoid valve: ON (PAIR control solenoid valve is operated using "EPAIR control solenoid drive control" on "Active control" of SDS-II.)
T78	—	—	—	—
T79	—	—	—	—
T80*	Gr/B	Fuel injector #2	Approx. 12 V	Ignition switch: ON
			Approx. 12 V ↑↓ Approx. 0 V	Engine: Running
T81*	Gr/W	Fuel injector #1	Approx. 12 V	Ignition switch: ON
			Approx. 12 V ↑↓ Approx. 0 V	Engine: Running
T82	—	—	—	—
T83	—	—	—	—
T84	Y	Ignition switch signal (If equipped)	Approx. 1 – 12 V	Ignition switch: ON
			Approx. 0 V	Ignition switch: OFF
T85	Br	Cooling fan relay	Approx. 12 V	Ignition switch: ON
			Approx. 0 V	• Ignition switch: ON • Cooling fan: Running
T86	V	FP relay	Approx. 12 V	• Engine stop / starter switch: "RUN" position • Ignition switch: After several seconds of ON • Engine: Stopped
			Approx. 0 V	Engine: Running
T87	Lbl	Power source for fuel injectors and fuel pump	Approx. 0 V	• Engine stop / starter switch: "RUN" position • Ignition switch: After several seconds of turned ON • Engine: Stopped
			Approx. 12 V	Engine: Running
T88	Gr	Power source for TP sensor #2	Approx. 5 V	Ignition switch: ON
			Approx. 0 V	Ignition switch: OFF
T89	P	Power source for accelerator position sensor (main)	Approx. 5 V	Ignition switch: ON
			Approx. 0 V	Ignition switch: OFF
T90	R	Power source for TP sensor #1	Approx. 5 V	Ignition switch: ON
			Approx. 0 V	Ignition switch: OFF
T91	Bl	Power source for accelerator position sensor (sub)	Approx. 5 V	Ignition switch: ON
			Approx. 0 V	Ignition switch: OFF
T92	—	—	—	—
T93	W	Engine stop switch signal	Approx. 12 V	• Ignition switch: ON • Engine stop / starter switch: "RUN" position
			Approx. 0 V	• Ignition switch: ON • Engine stop / starter switch: "STOP" position
T94	—	—	—	—
T95	—	—	—	—
T96	—	—	—	—

Terminal No.	Wire color	Circuit	Normal voltage	Condition
T97	Gr	Mode select coupler (6P)	Approx. 12 V	Ignition switch: ON
			Approx. 0 V	Ignition switch: OFF
T98	—	—	—	—
T99	—	—	—	—
T100	W	TP sensor #2 (main) signal	Approx. 3.66 – 3.76 V	• Ignition switch: ON • Throttle grip: Released
			Approx. 0.65 – 0.75 V	• Ignition switch: ON • Throttle grip: Fully open position
T101	G	TP sensor #2 (sub) signal	Approx. 4.26 – 4.36 V	• Ignition switch: ON • Throttle grip: Released
			Approx. 1.25 – 1.35 V	• Ignition switch: ON • Throttle grip: Fully open position
T102*	Bl/W	Rear wheel speed sensor signal	Approx. 5 V ↑↓ Approx. 0 V	Riding condition: While running
T103*	Bl/B	Front wheel speed sensor signal	Approx. 5 V ↑↓ Approx. 0 V	Riding condition: While running
T104	Lg	Throttle valve motor relay	Approx. 12 V	Ignition switch: OFF
			Approx. 0 V	Ignition switch: ON
T105	—	—	—	—
T106	—	—	—	—
T107	—	—	—	—
T108	—	—	—	—
T109	—	—	—	—
T110	—	—	—	—
T111	—	—	—	—
T112	—	—	—	—
T113	—	—	—	—
T114	—	—	—	—
T115	—	—	—	—
T116	—	—	—	—
T117	—	—	—	—
T118	—	—	—	—
T119	—	—	—	—
T120	—	—	—	—
T121	—	—	—	—
T122	—	—	—	—
T123	—	—	—	—
T124	G/B	Immobilizer communication (If equipped)	—	—
T125	R/Y	Immobilizer communication (If equipped)	—	—
T126	R	Accelerator position sensor (sub) ground	Approx. 0 V	Any condition
T127	Y	Accelerator position sensor (main) ground	Approx. 0 V	Any condition
T128	Gr	Accelerator position sensor (sub) signal	Approx. 0.84 – 0.96 V	• Ignition switch: ON • Throttle grip: Released
			Approx. 4.19 – 4.31 V	• Ignition switch: ON • Throttle grip: Fully open position
			Approx. 0.64 – 0.76 V	• Ignition switch: ON • Throttle grip: Cruise control cancel switch position (If equipped)

Terminal No.	Wire color	Circuit	Normal voltage	Condition
T129	V	Accelerator position sensor (main) signal	Approx. 0.50 – 0.62 V	• Ignition switch: ON • Throttle grip: Released
			Approx. 3.18 – 3.30 V	• Ignition switch: ON • Throttle grip: Fully open position
			Approx. 0.30 – 0.42 V	• Ignition switch: ON • Throttle grip: Cruise control cancel switch position (If equipped)
T130	Be	TP sensor #1 ground	Approx. 0 V	Any condition
T131	Y	TP sensor #1 (sub) signal	Approx. 4.26 – 4.36 V	• Ignition switch: ON • Throttle grip: Released
			Approx. 1.25 – 1.35 V	• Ignition switch: ON • Throttle grip: Fully open position
T132	P	TP sensor #1 (main) signal	Approx. 3.66 – 3.76 V	• Ignition switch: ON • Throttle grip: Released
			Approx. 0.65 – 0.75 V	• Ignition switch: ON • Throttle grip: Fully open position
T133	B	TP sensor #2 ground	Approx. 0 V	Any condition
T134	—	—	—	—
T135	—	—	—	—
T136	—	—	—	—

ECM Power Supply and Ground Circuit Check

BENL06L21104061

Circuit Diagram

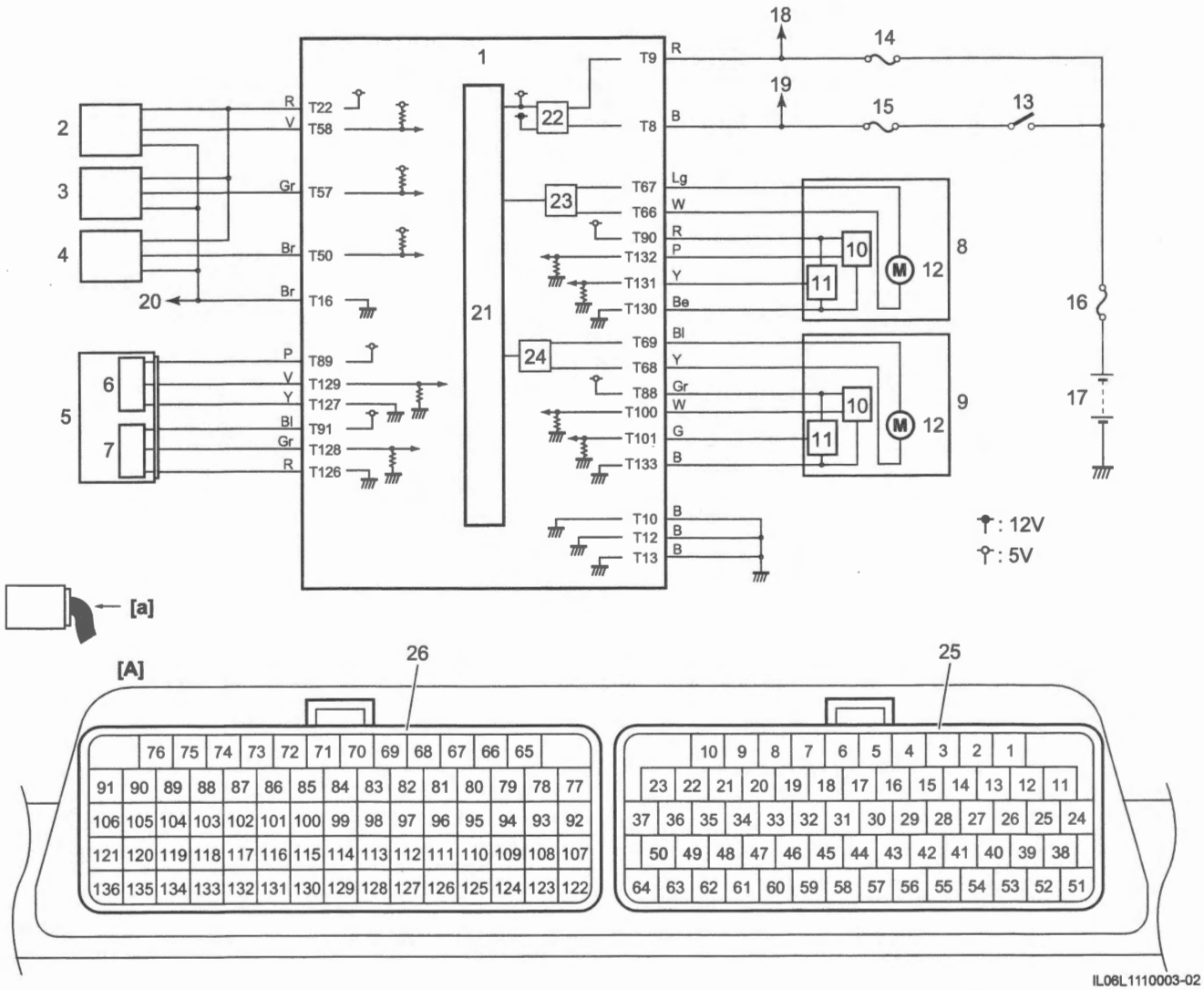

IL06L1110003-02

[A]: ECM connector "T" (View [a])	9. Throttle body assembly #2	18. To FP relay and throttle valve motor relay
1. ECM	10. TP sensor (main)	19. To HO2 sensor, Engine stop / starter switch ("RUN / STOP" position), cooling fan relay, EVAP system purge control solenoid valve and PAIR control solenoid valve
2. IAP sensor #1	11. TP sensor (sub)	20. To each sensor
3. IAP sensor #2	12. Throttle valve motor	21. CPU
4. TO sensor	13. Ignition switch	22. Power supply circuit
5. Throttle grip assembly	14. Fuel fuse (10 A)	23. Throttle valve motor #1 drive circuit
6. Accelerator position sensor (main)	15. Ignition fuse (10 A)	24. Throttle valve motor #2 drive circuit
7. Accelerator position sensor (sub)	16. Main fuse (30 A)	25. Coupler "A"
8. Throttle body assembly #1	17. Battery	26. Coupler "B"

Troubleshooting

NOTE

- **As each terminal voltage is affected by battery voltage, check that battery voltage is 12 V or more when ignition switch is "ON".**
- **Before performing, check that related fuses of ECM power circuit have not blown out.**
  If any fuse has blown out, replace the fuse and check circuits connected to the blown fuse for short circuit to ground.

Step 1

ECM power supply circuit check

1) Turn the ignition switch OFF.
2) Disconnect the ECM coupler. ☞(Page 1C-2)
3) Check for proper terminal connection to ECM coupler "A".
4) If connections are OK, turn the ignition switch ON.
5) Measure the voltage between the following terminal at the ECM coupler "A" (1).
   - Between the "T8" and "T10".
   - Between the "T8" and "T12".
   - Between the "T8" and "T13".

ECM power supply voltage
[Standard]: Battery voltage

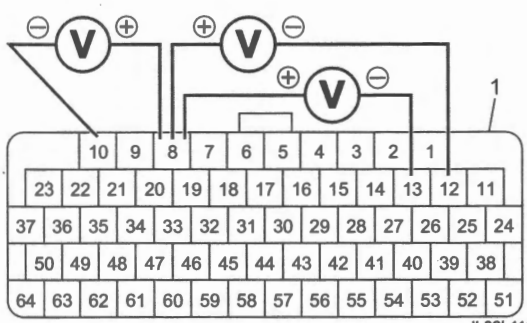

IL06L1110141-01

Is check result OK?

Yes — Go to Step 3.

No — Go to Step 2.

Step 2

ECM ground circuit check

1) Measure the voltage between "T8" at the ECM coupler "A" (1) and ground.

ECM power supply voltage
[Standard]: Battery voltage

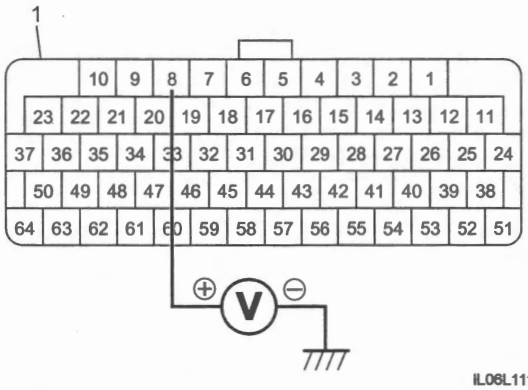

IL06L1110142-01

Is check result OK?

Yes — Repair or replace defective ground wire harness.

No — Check "T8" wire for open, short circuit to battery and short circuit to ground. If "T8" wire is in good condition, check the following parts.
- Wire for open, short circuit to battery and short circuit to ground of the wire harness between battery and ignition switch.
- Fuses
- Ignition switch

Step 3

ECM back-up power supply circuit check

1) Turn the ignition switch OFF.
2) Measure the voltage between "T9" at the ECM coupler "A" (1) and ground.

ECM power supply voltage
[Standard]: Battery voltage

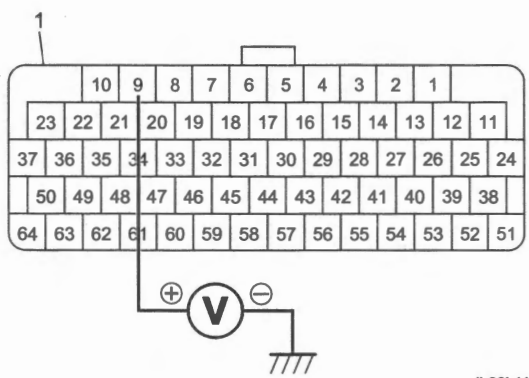

IL06L1110140-02

Is check result OK?

Yes — Go to Step 4.

No — Check "T9" wire for open and short circuit to ground. If "T9" wire is in good condition, check the fuse.

Step 4

Sensor power supply circuit check

1) Turn the ignition switch OFF.
2) Connect the ECM coupler "A". ☞(Page 1C-2)
3) Disconnect the following sensor couplers.
   - IAP sensor #1 and #2: ☞(Page 1C-3)
   - TO sensor: ☞(Page 1C-10)
   - Accelerator position sensor: ☞(Page 1C-11)
   - TP sensor #1 and #2 (Throttle body #1 and #2): ☞(Page 1C-7)
4) Check for proper terminal connection to each sensor couplers.
5) If connections are OK, turn the ignition switch ON.
6) Measure the sensor power supply voltage.

Sensor power supply voltage
[Standard]: 4.5 – 5.5 V

- IAP sensor coupler (1): Between the "T2" and "T1".

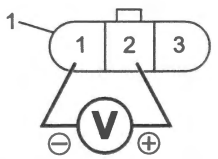

IL06L1110007-03

- TO sensor coupler (1): Between the "T4" and "T6".

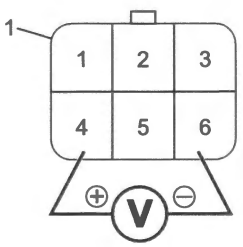

IJ27K2112037-01

- Accelerator position sensor coupler (1)
  - Accelerator position sensor (main): Between the "T1" and "T2".
  - Accelerator position sensor (sub): Between the "T5" and "T6".

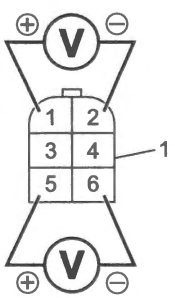

IL06L1110145-01

- TP sensor (Throttle body (1)) coupler: Between the "T2" and "T4".

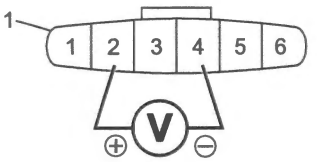

IL06L1110025-05

Is check result OK?

Yes — ECM power supply and ground circuits are in good condition.

No — Go to Step 5.

Step 5

Sensor ground circuit check

1) Measure the sensor power supply voltage.

Sensor power supply voltage
[Standard]: 4.5 – 5.5 V

- IAP sensor coupler (1): Between the "T2" and ground.

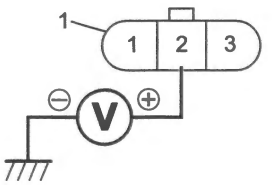

IL06L1110008-03

- TO sensor coupler (1): Between the "T4" and ground.

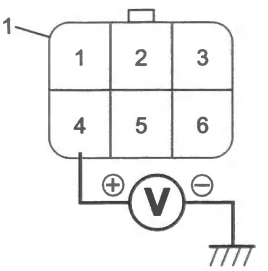

IJ27K2112038-01

- Accelerator position sensor coupler (1)
  - Accelerator position sensor (main): Between the "T1" and ground.
  - Accelerator position sensor (sub): Between the "T5" and ground.

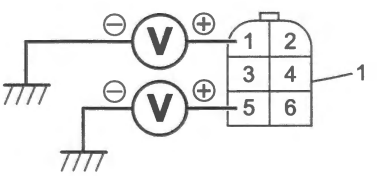

IL06L1110149-01

- TP sensor (Throttle body (1)) coupler: Between the "T2" and ground.

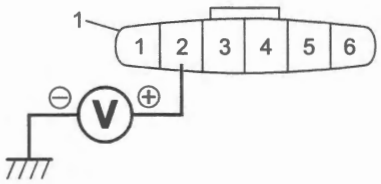

IL06L1110026-05

Is check result OK?

Yes	Repair or replace the defective ground wire harness.
No	Check defective sensor power supply circuit wire for open, short circuit to battery and short circuit to ground. If sensor power supply circuit wire is in good condition, replace the ECM and recheck ECM power supply and ground circuits. ☞(Page 1C-2)

Special Tools and Equipment

Special Tool

BENL06L21108001

09904–41031 SDS-II set ☞(Page 1A-11) / ☞(Page 1A-12) 	09904–41041 SDS-II (oscilloscope) set ☞(Page 1A-11) / ☞(Page 1A-12) 
09904–41051 Conversion cable ☞(Page 1A-4) 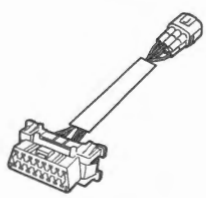	09904–41070 Conversion cable (ISO) ☞(Page 1A-4) / ☞(Page 1A-11) / ☞(Page 1A-12) 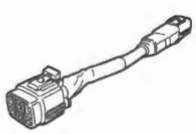
09930–83130 Mode selection switch (ISO) ☞(Page 1A-3) / ☞(Page 1A-12) 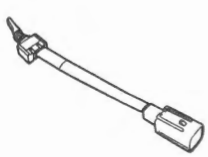	

Emission Control Devices

Precautions

Precautions for Emission Control Devices

BENL06L21200001

Refer to "General Precautions" in Section 00 (Page 00-1).

Schematic and Routing Diagram

PAIR System Hose Routing Diagram

BENL06L21202001

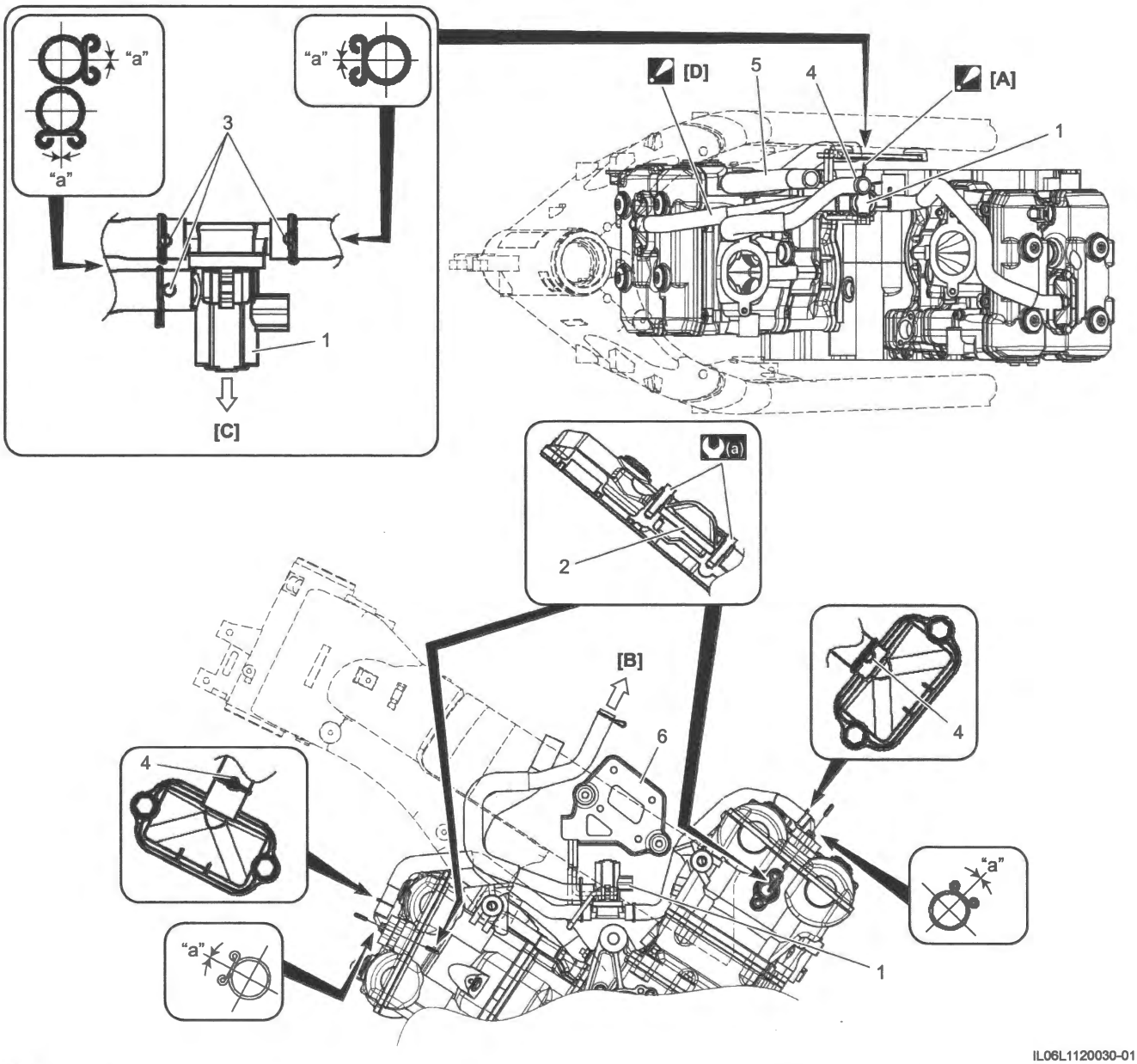

IL06L1120030-01

[A]: Clamp end should face right side approx. 45° of the vehicle.	1. PAIR control solenoid valve	5. PCV hose
[B]: To air cleaner box	2. PAIR reed valve	6. Ignition coil bracket
[C]: Upper side	3. Yellow marking	"a": Approx. 0°
[D]: Pass the PAIR hose inside of the PCV hose.	4. White marking	(a): 10 N·m (1.0 kgf-m, 7.5 lbf-ft)

PCV Hose Routing Diagram

BENL06L21202002

Refer to "Intake System Components" in Section 1D (Page 1D-3).

EVAP Canister Hose Routing Diagram

BENL06L21202003

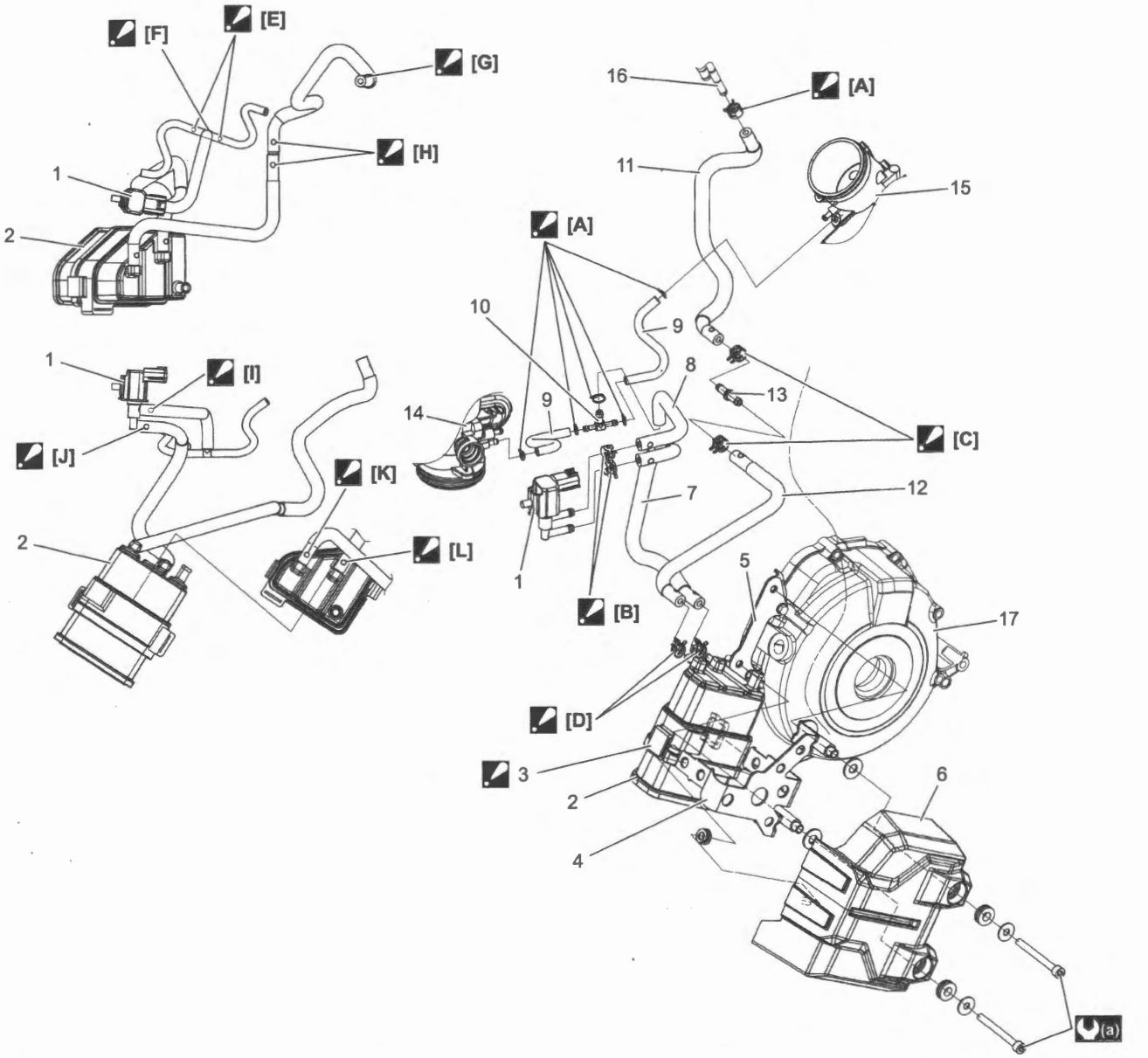

IL06L1120031-03

[A]: Face the clamp end to right side.	[K]: Face the green mark upward.	9. EVAP purge No.3 hose
[B]: Face the clamp end to left side.	[L]: Face the white mark upward.	10. EVAP purge hose joint
[C]: Face the clamp end forward.	1. EVAP system purge control solenoid valve	11. EVAP surge No.1 hose
[D]: Face the clamp end upward.	2. EVAP canister	12. EVAP surge No.2 hose
[E]: Face the white mark downward.	3. EVAP canister cushion : Align the groove of the EVAP cushion with the boss of the EVAP canister.	13. EVAP surge hose joint
[F]: Face the white mark to right side.	4. EVAP canister No.1 bracket	14. Throttle body (front side)
[G]: Face the green mark right side.	5. EVAP canister No.2 bracket	15. Throttle body (rear side)
[H]: Face the blue marks toward the same direction.	6. EVAP canister cover	16. Fuel tank
[I]: Face the yellow mark to right side.	7. EVAP purge No.1 hose	17. Generator cover
[J]: Face the yellow mark to left side.	8. EVAP purge No.2 hose	(a): 5.5 N·m (0.56 kgf-m, 4.05 lbf-ft)

Repair Instructions

PAIR Reed Valve Removal and Installation

BENL06L21206001

Refer to "PAIR System Hose Routing Diagram" (Page 1B-1).

Removal

⚠ WARNING

The hot radiator and hot engine can burn you.
Wait until the radiator and the engine are cool enough to touch.

Front side

1) Remove the side cover assembly. ☞(Page 9D-33)
2) Loosen the radiator mounting upper bolt (1) and nut (2).
3) Remove the radiator mounting lower bolt (3).

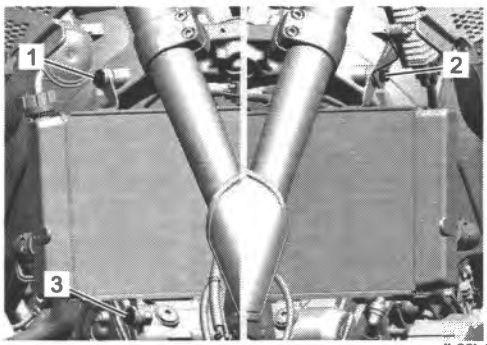

IL06L1120008-01

4) Move the radiator (1) arrow direction as shown in figure.

NOTICE

Be careful not to damage the radiator fins.

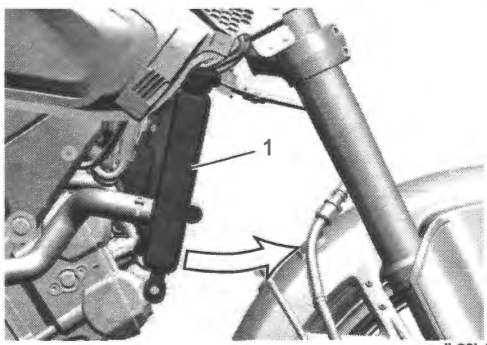

IL06L1120009-01

5) Disconnect the PAIR hose (1) from the PAIR reed valve cover.

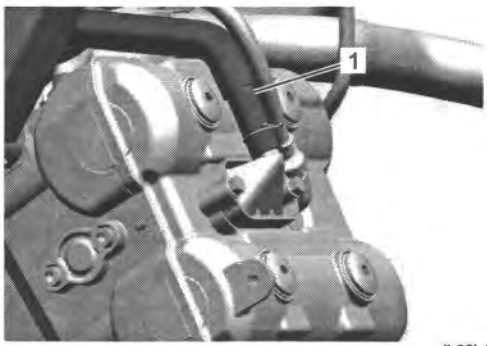

IL06L1120010-01

6) Remove the PAIR reed valve cover (1).

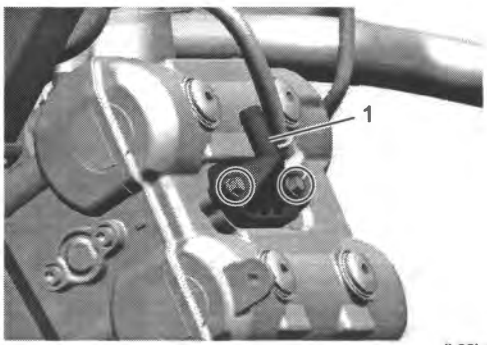

IL06L1120011-01

7) Remove the PAIR reed valve (1).

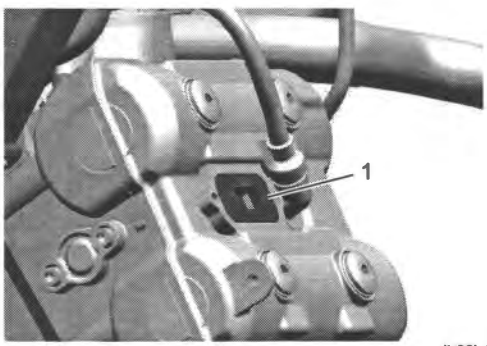

IL06L1120012-01

Rear side

1) Lift and support the fuel tank. ☞(Page 1G-7)
2) Remove the radiator reservoir tank mounting bolts (1).
3) Move the radiator reservoir tank (2).

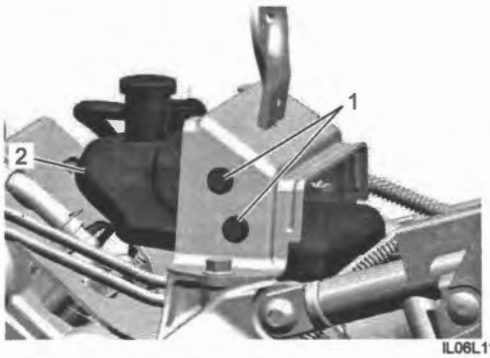

IL06L1120013-01

4) Disconnect the PAIR hose (1) from the PAIR reed valve cover.

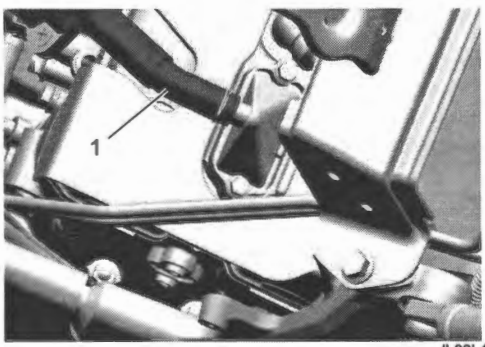

IL06L1120014-01

5) Remove the PAIR reed valve cover (1).

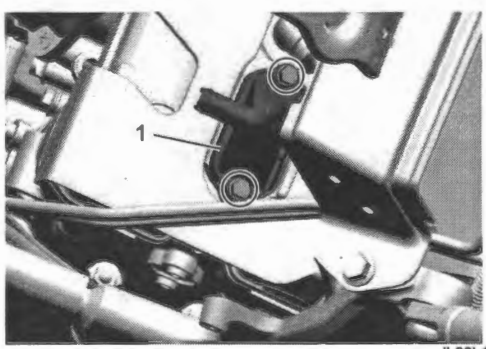

IL06L1120015-01

6) Remove the PAIR reed valve (1).

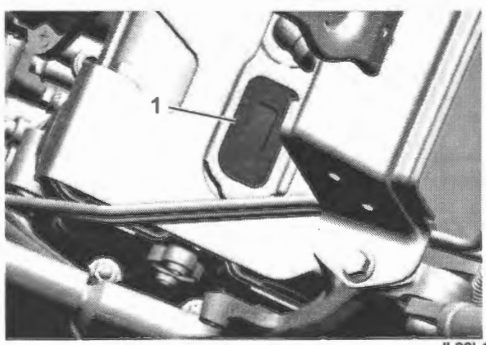

IL06L1120016-01

Installation

Install the PAIR reed valve in the reverse order of removal. Pay attention to the following points:

- Tighten PAIR reed valve cover bolts (1) to the specified torque.

  Tightening torque
  PAIR reed valve cover bolt (a): 10 N·m (1.0 kgf-m, 7.5 lbf-ft)

Front side

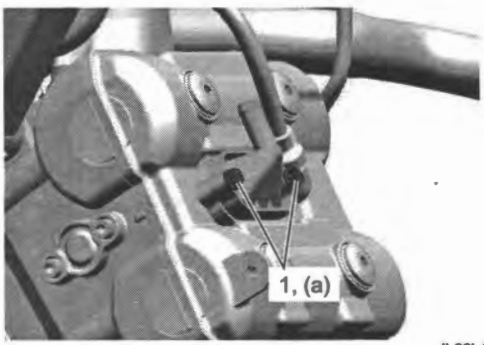

IL06L1120017-01

Rear side

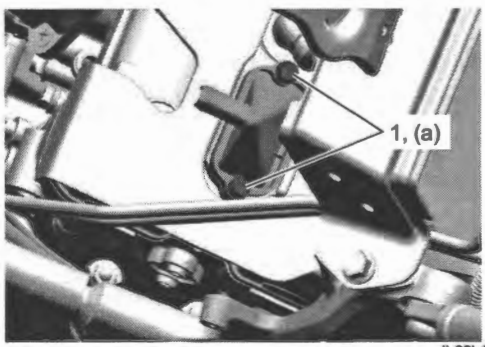

IL06L1120018-01

- Connect the PAIR hoses properly. Refer to "PAIR System Hose Routing Diagram" (Page 1B-1).
- For rear side, install the radiator reservoir tank. ☞(Page 1F-10)
- For front side, install the radiator. ☞(Page 1F-8)

PAIR Control Solenoid Valve Removal and Installation

BENL06L21206002

Refer to "PAIR System Hose Routing Diagram" (Page 1B-1).

Removal

1) Remove the throttle body assembly of rear side. ☞(Page 1D-7)
2) Disconnect the PAIR control solenoid valve coupler (1).

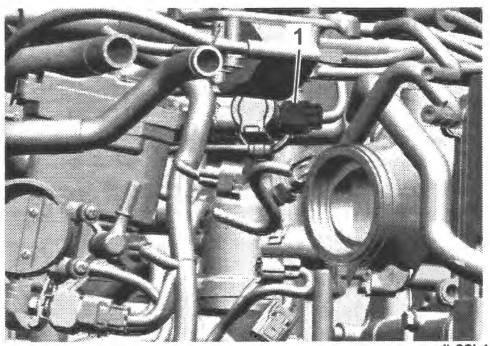

IL06L1120019-01

3) Disconnect the PAIR hoses (1) from PAIR control solenoid valve.

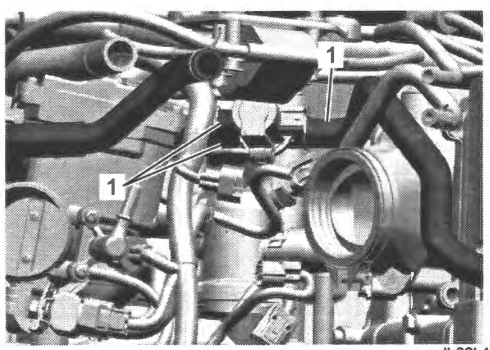

IL06L1120022-01

4) Remove the PAIR control solenoid valve (1) from ignition coil bracket (2).

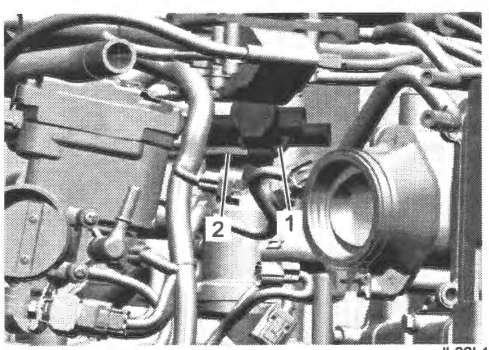

IL06L1120023-01

Installation

Install the PAIR control solenoid valve in the reverse order of removal. Pay attention to the following point:

- Connect the PAIR hoses properly. Refer to "PAIR System Hose Routing Diagram" (Page 1B-1).

PAIR System Inspection

BENL06L21206003

Refer to "PAIR (air supply) System" in Section 0B (Page 0B-15).

PAIR Hose Removal and Installation

BENL06L21206004

Refer to "PAIR System Hose Routing Diagram" (Page 1B-1).

Removal

1) Disconnect the PAIR hoses from the PAIR reed valve cover. Refer to "PAIR Reed Valve Removal and Installation" (Page 1B-3).
2) Disconnect the PAIR hoses from PAIR control solenoid valve. Refer to "PAIR Control Solenoid Valve Removal and Installation" (Page 1B-5).
3) Remove the PAIR hoses.

Installation

Install the PAIR hoses in the reverse order of removal. Pay attention to the following points:

- Connect the PAIR hoses properly. Refer to "PAIR System Hose Routing Diagram" (Page 1B-1).

PCV Hose Inspection

BENL06L21206005

1) Lift and support the fuel tank. ☞(Page 1G-7)
2) Inspect the PCV hose (1) for wear and damage. If it is worn or damaged, replace the PCV hose with a new one.
3) Check that the PCV hose is securely connected.

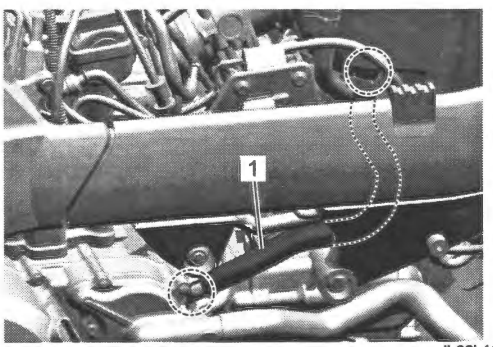

IL06L1120024-01

4) After finishing the PCV hose inspection, install the removed parts.

PCV Hose Removal and Installation

BENL06L21206006

Refer to "Intake System Components" in Section 1D (Page 1D-3).

Removal

1) Remove the fuel tank. ☞(Page 1G-7)
2) Disconnect the PCV hose (1) from air cleaner box.

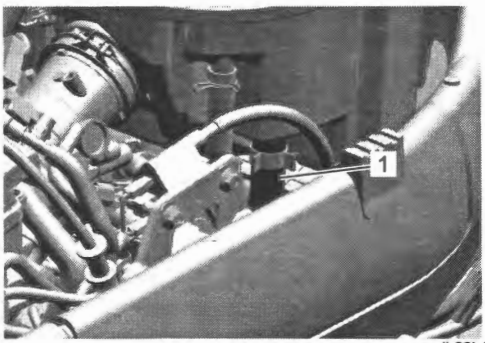

IL06L1120025-01

3) Remove the air cleaner box. ☞(Page 1D-6)
4) Disconnect the PCV hose (1) from clutch cover.

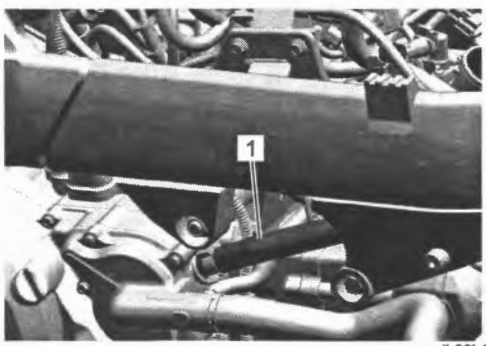

IL06L1120026-01

5) Remove the PCV hose.

Installation

Install the PCV hose in the reverse order of removal. Pay attention to the following points:

- Connect the PCV hose properly. Refer to "Intake System Components" in Section 1D (Page 1D-3).

EVAP System Removal and Installation

BENL06L21206007

Refer to "EVAP Canister Hose Routing Diagram" (Page 1B-2).

Hose

Removal

1) Remove the air cleaner box. ☞(Page 1D-6)
2) Disconnect the EVAP purge No.1 hose and EVAP purge No.2 hose from EVAP system purge control solenoid valve. Refer to "EVAP System Purge Control Solenoid Valve" (Page 1B-7).
3) Disconnect the EVAP surge No.2 hose and EVAP purge No.1 hose from EVAP canister. Refer to "EVAP Canister" (Page 1B-7).
4) Disconnect the EVAP purge No.3 hoses (1) from throttle body.

Front side

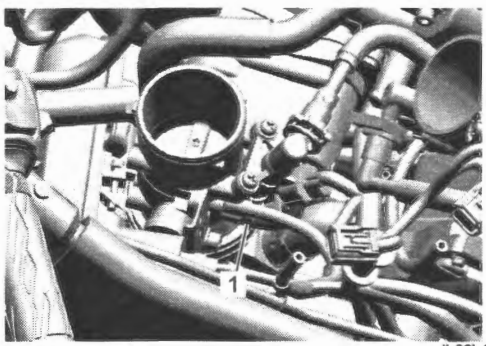

IL06L1120028-01

Rear side

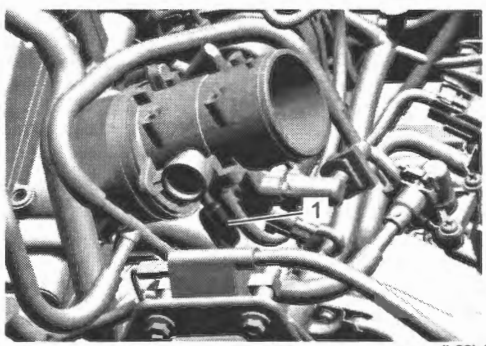

IL06L1120029-01

5) Remove the EVAP hoses.

Installation

Install the EVAP hoses in the reverse order of removal. Pay attention to the following points:

- Connect the EVAP hoses properly. Refer to "EVAP Canister Hose Routing Diagram" (Page 1B-2) and "Intake System Components" in Section 1D (Page 1D-3).

EVAP Canister

Removal

1) Remove the EVAP canister bracket bolts (1).
2) Disconnect the EVAP surge No.2 hose (2) and EVAP purge No.1 hose (3) from EVAP canister.

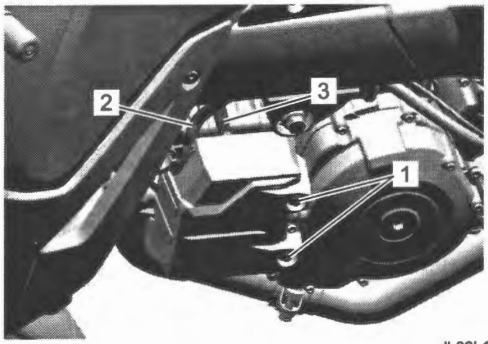

IL06L1120001-01

3) Remove the EVAP canister (1).

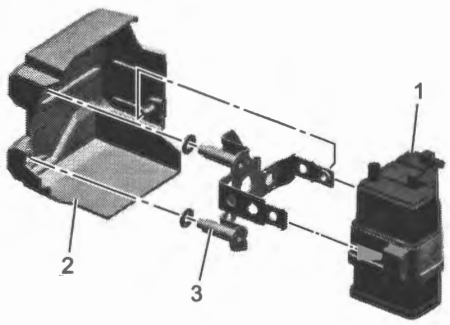

IL06L1120002-01

2. EVAP canister cover	3. EVAP canister No.1 bracket

Installation

Install the EVAP canister in the reverse order of removal. Pay attention to the following point:

- Align the groove (1) of the cushion with the boss of the EVAP canister.

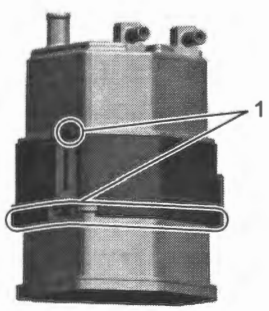

IL06L1120003-01

- Connect the EVAP surge No.2 hose and EVAP purge No.1 hose to EVAP canister as shown in the "EVAP Canister Hose Routing Diagram" (Page 1B-2) and "Intake System Components" in Section 1D (Page 1D-3).
- Tighten the EVAP canister bracket bolts (1) to the specified torque.

Tightening torque
EVAP canister bracket bolt (a): 5.5 N·m (0.56 kgf-m, 4.05 lbf-ft)

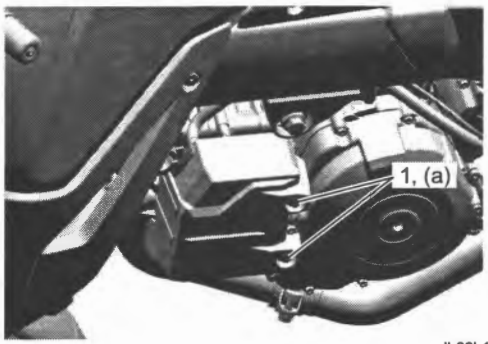

IL06L1120004-01

EVAP System Purge Control Solenoid Valve

Removal

1) Remove the air cleaner box. ☞(Page 1D-6)
2) Disconnect the EVAP system purge control solenoid valve coupler (1).

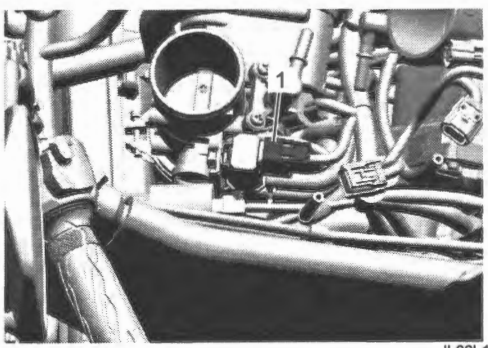

IL06L1120005-02

3) Remove the EVAP system purge control solenoid valve (1) from its bracket.

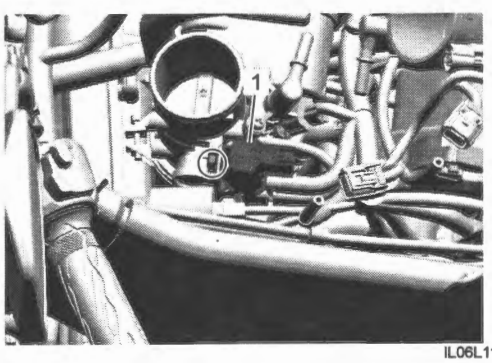

IL06L1120006-02

4) Disconnect the EVAP purge No.1 hose (1) and EVAP purge No.2 hose (2) from EVAP system purge control solenoid valve.

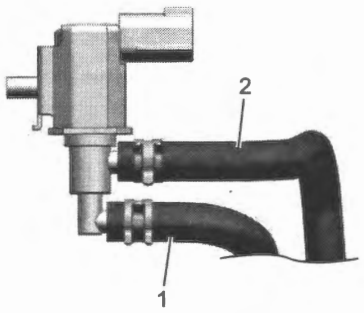

IL06L1120027-01

Installation

Install the EVAP system purge control solenoid valve in the reverse order of removal. Pay attention to the following point:

- Connect the EVAP purge No.1 hose and EVAP purge No.2 hose as shown in the "EVAP Canister Hose Routing Diagram" (Page 1B-2) and "Intake System Components" in Section 1D (Page 1D-3).

- Tighten the EVAP system purge control solenoid valve nut (1) to the specified torque.

Tightening torque
EVAP system purge control solenoid valve nut (a): 6.7 N·m (0.68 kgf-m, 4.95 lbf-ft)

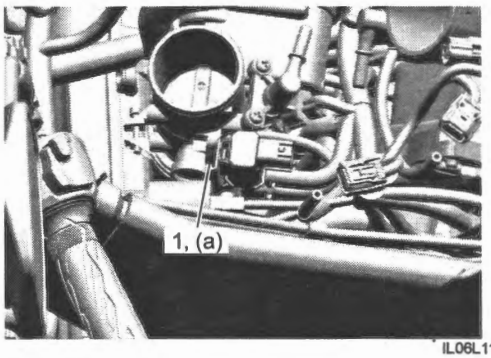

IL06L1120007-02

Fuel Shut-off Valve

For fuel tank cap removal and installation, refer to "Fuel Tank Cap Removal and Installation" in Section 1G (Page 1G-7).

EVAP System Inspection

BENL06L21206008

Refer to "Evaporative emission control system" in Section 0B (Page 0B-12).

Specifications

Tightening Torque Specifications

BENL06L21207001

Fastening part	Tightening torque			Note
	N·m	kgf-m	lbf-ft	
PAIR reed valve cover bolt	10	1.0	7.5	☞(Page 1B-4)
EVAP canister bracket bolt	5.5	0.56	4.05	☞(Page 1B-7)
EVAP system purge control solenoid valve nut	6.7	0.68	4.95	☞(Page 1B-8)

Reference:

For the tightening torques of fasteners not specified in this page, refer to:
"PAIR System Hose Routing Diagram" (Page 1B-1)
"EVAP Canister Hose Routing Diagram" (Page 1B-2)
"Fasteners Information" in Section 0C (Page 0C-10)

Engine Electrical Devices

Precautions

Precautions for Engine Electrical Device

BENL06L21300001

Refer to "General Precautions" in Section 00 (Page 00-1), "Precautions for Electrical Circuit Service" in Section 00 (Page 00-2), "Precautions for Circuit Tester" in Section 00 (Page 00-8) and "Precautions for SDS-II" in Section 00 (Page 00-8).

Precautions for Electric Throttle Control System

BENL06L21300002

⚠ CAUTION

If you touch the throttle valve with your finger when the ignition switch is "ON" and the throttle grip is opened, your finger may be pinched in the gap between the throttle valve and throttle body housing when the throttle grip is released.
Never touch the throttle valve with your finger when the ignition switch is "ON" and the throttle grip is opened.

NOTICE

- **Failure to take proper precautions when handling the throttle body may lead to malfunction of the throttle body or damage to its components.**
  - **Do not disassemble the throttle body.**
  - **Do not drop or otherwise expose the throttle body to large shock.**
  - **Keep the throttle body housing and/or throttle valve free of dust, metallic particles or other foreign materials.**
  - **Do not apply undue forces to the throttle valve when checking operation of the throttle valve or performance of the TP sensor.**
- **Failure to take proper precautions when handling the throttle grip assembly may lead to malfunction of the throttle grip assembly or damage to its components.**
  - **Do not disassemble the sensor section of the throttle grip assembly.**
  - **Do not drop or otherwise expose the throttle grip assembly to large shock.**
  - **Keep the sensor section of the throttle grip assembly free of water, grease or other foreign materials.**

NOTE

Does not have to adjust the throttle valve synchronization among two cylinders because it is adjusted automatically at idle speed after warming up by ECM.

Component Location

Engine Electrical Components Location

BENL06L21303001

Refer to "Electrical Components Location": Service Manual Information in Section 0A (Page 0A-10).

Diagnostic Information and Procedures

Engine Symptom Diagnosis

BENL06L21304001

Refer to "Engine Symptom Diagnosis" in Section 1A (Page 1A-25).

Repair Instructions

ECM Removal and Installation

BENL06L21306001

Removal

NOTICE

Be careful not to disconnect the ECM coupler at least 5 seconds after ignition switch is turned to OFF. If the ECM coupler is disconnected within 5 seconds after ignition switch is turned to OFF, there is a possibility of an unusual valve position being written in ECM and causing an error of throttle valve operation.

1) Remove the seat. ☞(Page 9D-27)
2) Remove the electric parts holder. ☞(Page 9D-40)
3) Disconnect the battery (–) lead wire. ☞(Page 1J-10)

NOTE

If necessary, remove the battery to disconnecting the ECM couplers in Step 4).

4) Disconnect the ECM couplers from the ECM as follows:
   a) Push the lock (1) to release locking of the lock lever (2).

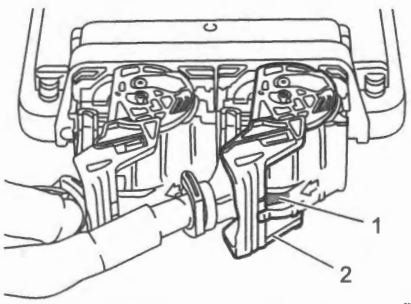

IL06L1130029-01

   b) Turn the lock lever (1) in arrow direction until it stops.

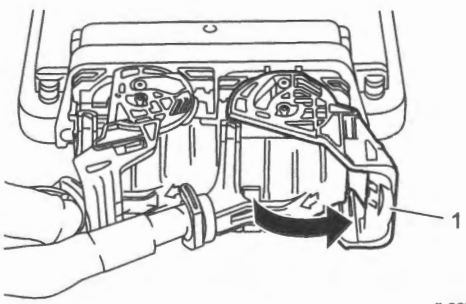

IL06L1130030-01

   c) Disconnect the ECM coupler "A" (1) from ECM (2).
   d) Apply the same procedure to disconnect the ECM coupler "B" (3) from ECM.

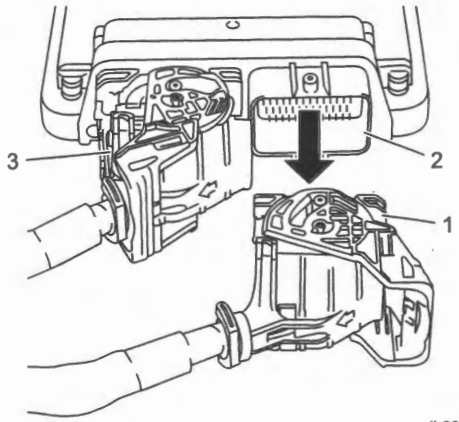

IL06L1130031-01

5) Remove the ECM.

Installation

Install the ECM in the reverse order of removal. Pay attention to the following point:

- Connect the ECM couplers as follows.
  a. Make sure that lock lever (1) are in unlock position.
  b. Insert ECM coupler to ECM (2) until they stop with lock lever in unlocked position.

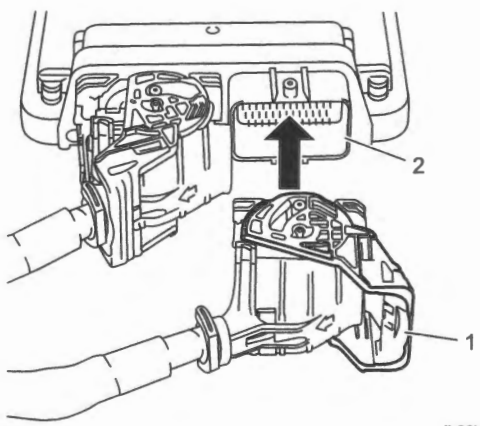

IL06L1130032-01

  c. Turn the lock lever (1) in direction of arrow to lock the ECM coupler securely.

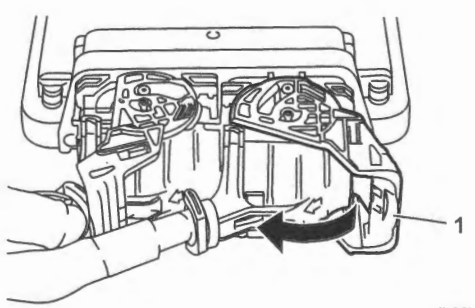

IL06L1130033-01

d. Make sure that lock lever (1) are in lock position.

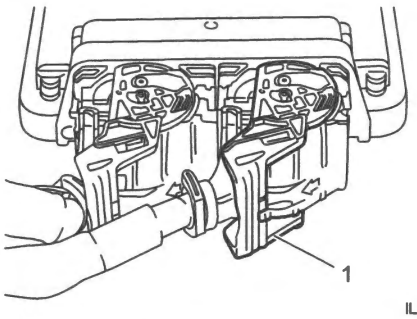

IL06L1130034-01

- After ECM is replaced with new one, perform the following procedure.
  a. Perform the "Reprogramming" to ECM. Referring to the SDS-II operation manual for further details.
  b. Perform the key registration. (if equipped)

ECM Learned Value Reset

BENL06L21306002

Perform ECM learned value reset whenever one of the following operations has been performed.

Operation	Item to reset
Throttle body is replaced	TP fully closed learned value reset
	ISC aperture learned value
Throttle grip assembly is replaced	TP fully closed learned value reset
HO2 sensor is replaced	Long term fuel trim reset (HO2 sensor feedback learned value)

1) Turn the ignition switch OFF.
2) Remove the rear seat. ☞(Page 9D-27)
3) Set up the SDS-II referring to the SDS-II operation manual for further details.

Special tool
09904–41031
09904–41041
09904–41070

4) Turn the ignition switch ON.
5) Click the "Active control".
6) Click the item depending on operation and follow instructions displayed on SDS-II.
7) Close the SDS-II and turn the ignition switch OFF.

NOTE

The ECM learned value initialization is automatically started after the ignition switch is turned OFF position.

IAP Sensor Inspection

BENL06L21306003

IAP Sensor Output Voltage at Idle Speed

1) Check the IAP sensor power supply voltage. ☞(Page 1A-34)
2) Turn the ignition switch OFF.
3) Connect the IAP sensor coupler and ECM couplers.
4) Connect the circuit tester to the wire harness as shown in the figure.
5) Start the engine and at idle speed, measure the IAP sensor output voltage between the G wire and Br wire. If the voltage is not within the specified value, replace the throttle body assembly. ☞(Page 1D-7)

IAP sensor #1 output voltage
Idle speed at 1 atm.
[Standard]: Approx. 0.789 – 4.0 V

IAP sensor #2 output voltage
Idle speed at 1 atm.
[Standard]: Approx. 0.789 – 4.0 V

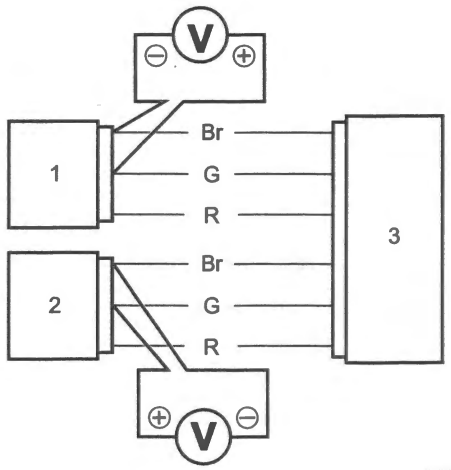

IL06L1130001-01

1. IAP sensor #1	3. ECM
2. IAP sensor #2	

6) After finishing the IAP sensor inspection, install the removed parts.

IAP Sensor Output Voltage

1) Turn the ignition switch OFF.
2) Remove the IAP sensor. ☞(Page 1C-4)
3) Connect the vacuum pump gauge to the vacuum port of the IAP sensor (1).
4) Arrange 3 new 1.5 V batteries (2) in series (check that total voltage is 4.5 – 5.0 V) and connect (–) terminal to the "T1" and (+) terminal to the "T3".
5) Measure the voltage between "T2" and "T1". Also, check if voltage reduces when vacuum is applied using the vacuum pump gauge.
   If the voltage is not within the specified value, replace the IAP sensor. ☞(Page 1C-4)

Special tool
(A): 09917–47011

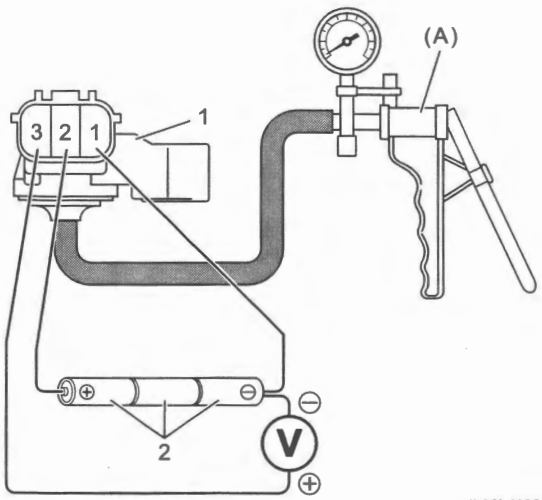

IL06L1130002-01

ALTITUDE (Reference)		ATOMOSPHERIC PRESSURE		OUTPUT VOLTAGE
m	ft	kPa	mmHg	V
0 – 610	0 – 2001	100 – 94	760 – 705	3.4 – 4.0
611 – 1524	2005 – 5000	94 – 85	705 – 638	3.0 – 3.7
1525 – 2438	5003 – 7999	85 – 76	638 – 570	2.6 – 3.4
2439 – 3048	8002 – 10000	76 – 70	570 – 525	2.4 – 3.1

IF04K1130058-02

6) After finishing the IAP sensor inspection, install the removed parts.

IAP Sensor Removal and Installation

BENL06L21306004

Removal

1) Lift and support the fuel tank. ☞(Page 1G-7)
2) Disconnect the IAP sensor couplers (1) and vacuum hoses (2).

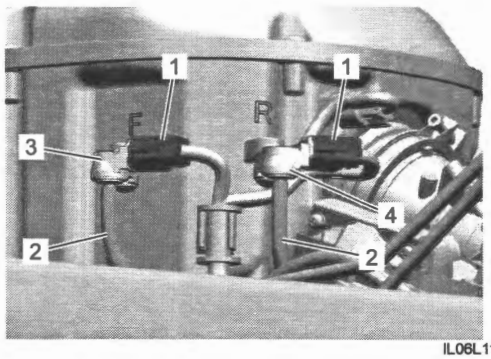

IL06L1130021-01

3. IAP sensor #1	4. IAP sensor #2

3) Remove the IAP sensor #1 (1) and IAP sensor #2 (2) from the air cleaner box.

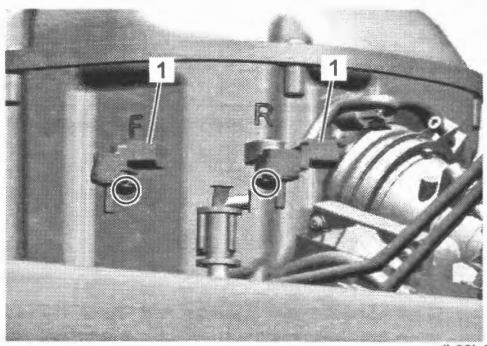

IL06L1130022-01

Installation

Install the IAP sensor in the reverse order of removal.
Pay attention to the following point:

- Tighten the IAP sensor screws to the specified torque.

Tightening torque
IAP sensor screw (a): 1.3 N·m (0.13 kgf-m, 0.95 lbf-ft)

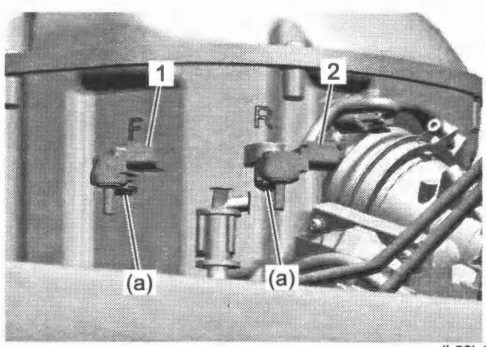

IL06L1130023-01

1. IAP sensor #1	2. IAP sensor #2

IAT Sensor Inspection

BENL06L21306005

1) Turn the ignition switch OFF.
2) Disconnect the IAT sensor coupler (1). ☞(Page 1C-5)

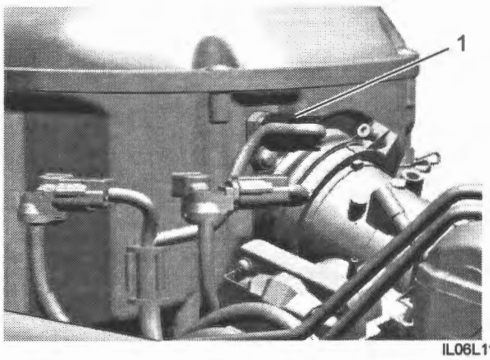

IL06L1130020-02

3) Measure the IAT sensor (1) resistance between the terminals of the IAT sensor. If the resistance is out of the specified value, replace the IAT sensor. ☞(Page 1C-5)

IAT sensor resistance
0 °C (32 °F) [Standard]: 5400 – 6600 Ω
80 °C (176 °F) [Standard]: 290– 390 Ω



IL06L1130003-01

IAT Sensor Removal and Installation

BENL06L21306006

Removal

1) Lift and support the fuel tank. ☞(Page 1G-7)
2) Disconnect the IAT sensor coupler (1).

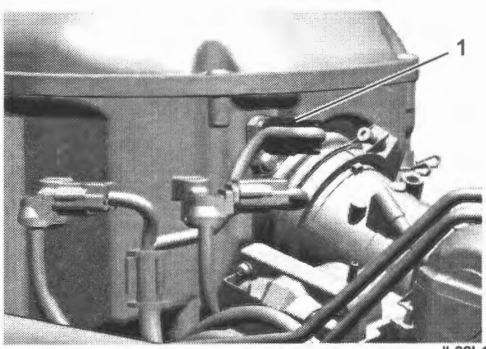

IL06L1130020-02

3) Remove the IAT sensor (1) from the air cleaner box.

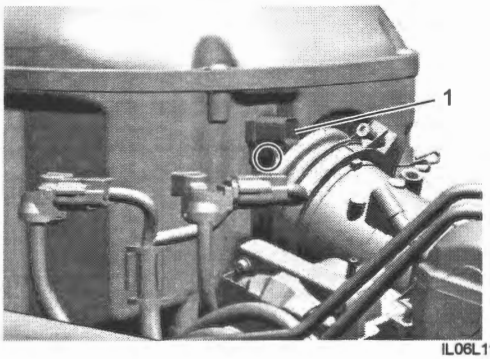

IL06L1130004-02

Installation

Install the IAT sensor in the reverse order of removal. Pay attention to the following point:

- Install the new O-ring (1) to the IAT sensor (2).

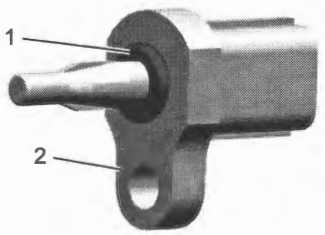

IL06L1130005-01

- Tighten the IAT sensor screw to the specified torque.

Tightening torque
IAT sensor screw (a): 1.3 N·m (0.13 kgf-m, 0.95 lbf-ft)

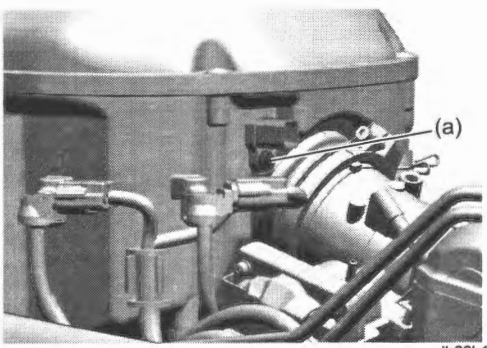

IL06L1130006-02

ECT Sensor Inspection

BENL06L21306007

Refer to "ECT Sensor Removal and Installation" (Page 1C-6).

Measure the resistance between terminals of the ECT sensor (1). Make sure that the resistance value decreases as temperature increase. If measured resistance does not change as specified, replace ECT sensor with a new one.

NOTICE

- **Handle the ECT sensor carefully as it will easily be broken if it receives excessively large shocks or forces.**
- **Keep the ECT sensor and thermometer (2) not in contact with the heater's water container.**

ECT sensor resistance

–20 °C (–4 °F) [Standard]: 13840 – 16330 Ω
20 °C (68 °F) [Standard]: 2320 – 2590 Ω
80 °C (176 °F) [Standard]: 310 – 326 Ω

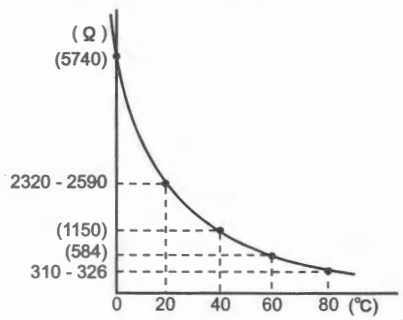

ID26J1130061-02

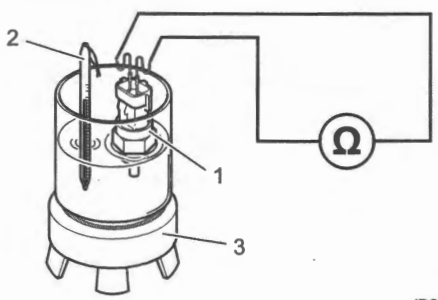

ID26J1130060-01

3. Heater

ECT Sensor Removal and Installation

BENL06L21306008

Removal

1) Drain engine coolant. ☞(Page 1F-7)
2) Remove the throttle body of rear side. ☞(Page 1D-7)
3) Disconnect the ECT sensor coupler (1).

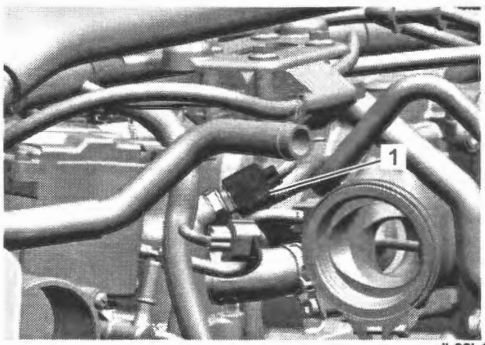

IL06L1130028-01

4) Remove the ECT sensor (1) and its gasket washer (2) from the thermostat inlet connector.

NOTICE

Take special care when handling the ECT sensor. It may cause damage if it gets an excessive impact.

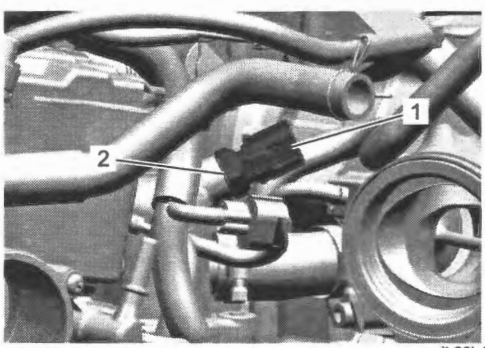

IL06L1130027-01

Installation

Install the ECT sensor in the reverse order of removal. Pay attention to the following points:

- Install the new gasket washer (1).
- Install the ECT sensor (2) and tighten it to the specified torque.

Tightening torque
ECT sensor (a): 18 N·m (1.8 kgf-m, 13.5 lbf-ft)

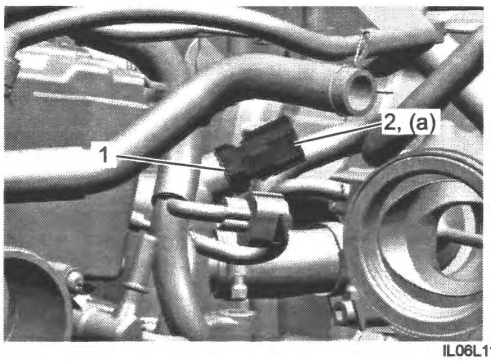

IL06L1130007-01

TP Sensor Inspection

BENL06L21306009

Refer to "Precautions for Electric Throttle Control System" (Page 1C-1).

1) Remove the throttle body. ☞(Page 1D-7)
2) Measure the output voltage of TP sensor main and sub signals as follows.
   If faulty condition is found, replace the throttle body with a new one. ☞(Page 1D-7)
   a) Arrange 3 new 1.5 V batteries (1) in series (check that total voltage is 4.5 – 5.0 V) and connect (–) terminal to the "T2" and (+) terminal to the "T4".
   b) Connect the voltmeter between the following terminal.
      - TP sensor (main): between the "T3" and "T4"
      - TP sensor (sub): between the "T1" and "T4"

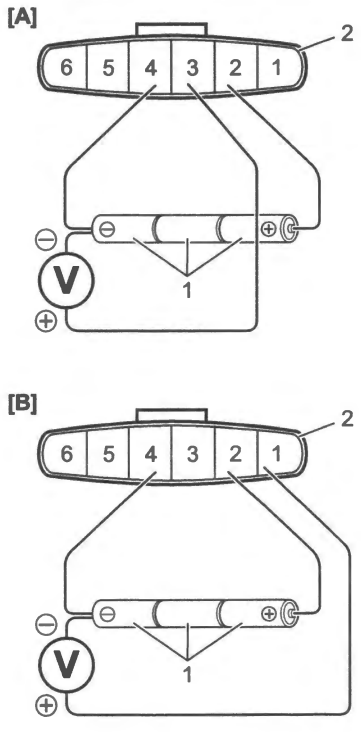

IL06L1130008-02

[A]: TP sensor (main)	2. Throttle body
[B]: TP sensor (sub)	

   c) Check that voltage varies depending on throttle opening angle as shown in the following graph while throttle valve is opened and closed manually.

TP sensor (main) output voltage
Closed [Standard]: 3.66 – 3.76 V
Opened [Standard]: 0.65 – 0.75 V

TP sensor (sub) output voltage
Closed [Standard]: 4.26 – 4.36 V
Opened [Standard]: 1.25 – 1.35 V

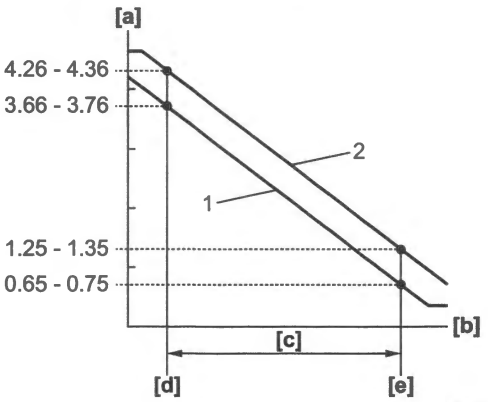

IL06L1130009-01

[a]: Voltage (V)	
[b]: Throttle valve opening	
[c]: Angle obtained when throttle valve is fully opened manually	
[d]: Fully closed position	
[e]: Fully opened position	
1. TP sensor (main) output voltage	
2. TP sensor (sub) output voltage	

3) After finishing the TP sensor inspection, install the removed parts.

HO2 Sensor Inspection

BENL06L21306010

HO2 Sensor Output Voltage

1) Remove the Frame front cover (RH). ☞(Page 9D-30)
2) Start the engine and warm up the engine enough.
3) Disconnect the HO2 sensor lead wire coupler (1).

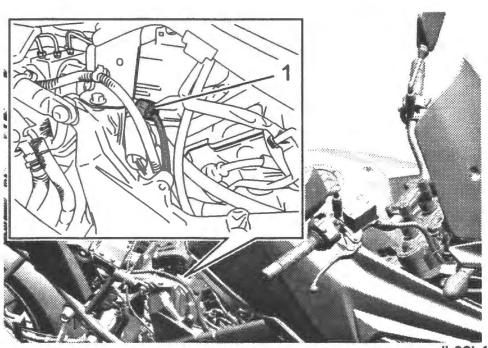

IL06L1130035-06

4) Measure the HO2 sensor (1) output voltage between the "T1" and "T2", in idling condition.

HO2 sensor output voltage
Idle speed [Standard]: 0 – 1.0 V
6000 r/min [Standard]: 0 – 1.0 V

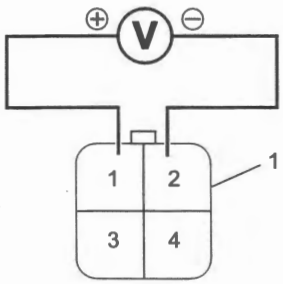

IL41K1130014-01

5) If the HO2 sensor output voltage is not within the standard range, replace the HO2 sensor with a new one. ☞(Page 1C-8)
6) After finishing the HO2 sensor inspection, install the removed parts.

HO2 Sensor Heater Resistance

1) Remove the Frame front cover (RH). ☞(Page 9D-30)
2) Disconnect the HO2 sensor lead wire coupler (1).

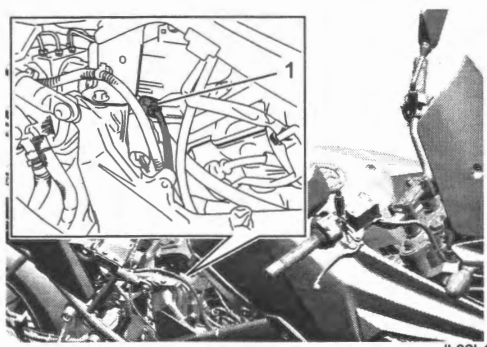

IL06L1130035-06

3) Measure the HO2 sensor heater resistance between the "T3" and "T4" of the HO2 sensor. If the resistance is out of the specified value, replace the HO2 sensor (1) with a new one. ☞(Page 1C-8)

HO2 sensor heater resistance
23 °C (73.4 °F) [Standard]: 11.5 – 17.5 Ω

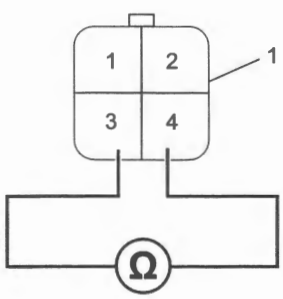

IL41K1130015-01

4) After finishing the HO2 sensor inspection, install the removed parts.

HO2 Sensor Removal and Installation

BENL06L21306011

⚠ WARNING

Do not remove the HO2 sensor while it is hot.

NOTICE

- **Be careful not to expose the HO2 sensor to excessive shock.**
- **Do not use an impact wrench when removing or installing the HO2 sensor.**
- **Be careful not to twist or damage the sensor lead wire.**

Removal

1) Remove the Frame front cover (RH). ☞(Page 9D-30)
2) Disconnect the HO2 sensor lead wire coupler (1).

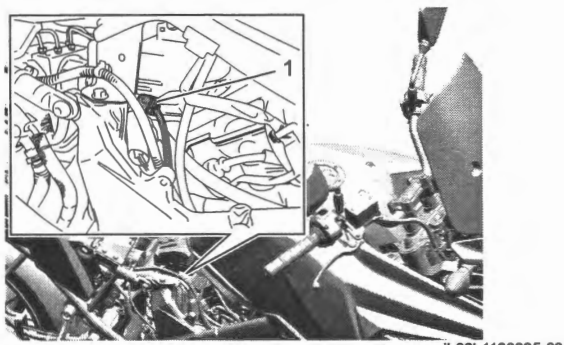

IL06L1130035-06

3) Remove the HO2 sensor (1) from exhaust pipe.

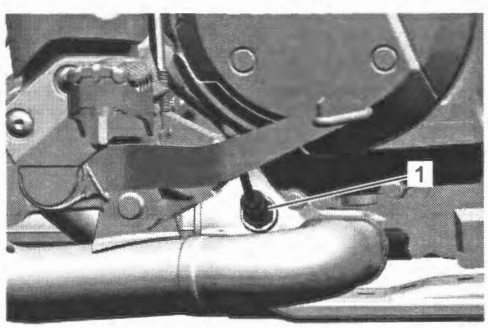

IL06L1130024-01

Installation

Install the HO2 sensor in the reverse order of removal. Pay attention to the following points:

- Apply nickel based anti seize to the thread part of HO2 sensor.
- Tighten the HO2 sensor to the specified torque.

Tightening torque
HO2 sensor (a): 25 N·m (2.5 kgf-m, 18.5 lbf-ft)

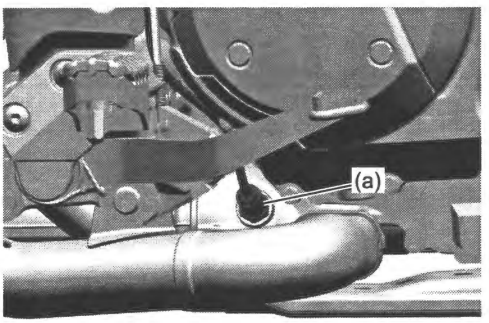

IL06L1130025-01

- Pass the HO2 sensor lead wire as follows.
  a. Pass the HO2 sensor lead wire (1) outside (2) of the GP switch lead wire (3).
  b. Pass the HO2 sensor lead wire inside (4) of the GP switch lead wire.

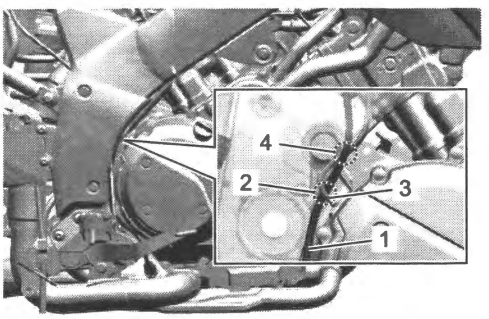

IL06L1130026-01

- Reset the long term fuel trim when replacing the HO2 sensor. ☞(Page 1C-3)

CKP Sensor Inspection

BENL06L21306012

CKP Sensor Peak Voltage

NOTE

Be sure that all the couplers are connected properly and the battery used is in fully-charged condition.

1) Remove the fuel fuse (10 A) (1) to stop the fuel injection.

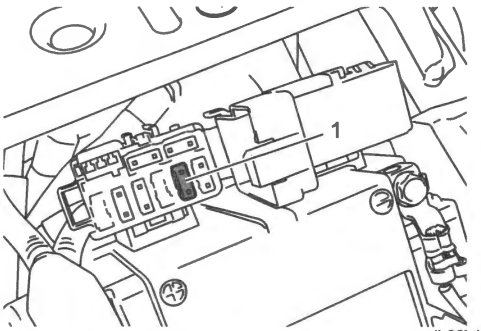

IL06L1130036-01

2) Lift and support the fuel tank. ☞(Page 1G-7)
3) Disconnect the CKP sensor lead wire coupler (1).

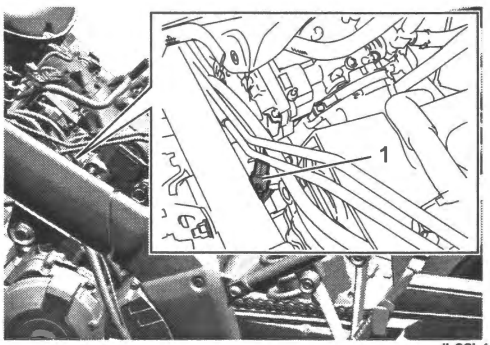

IL06L1130037-02

4) Connect the multi circuit tester with the peak voltage adapter (1) as follows.

CKP sensor – circuit tester connection

	(+) Probe	(–) Probe
CKP sensor (2)	T1	T2

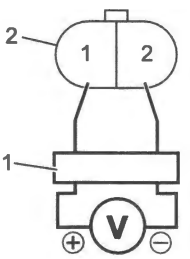

IL41K1130018-01

5) Measure the CKP sensor peak voltage in the following procedures:
   a) Shift the transmission to the neutral and turn the ignition switch ON.
   b) Grasp the clutch lever.
   c) Push the engine stop / starter switch to the "START" position and allow the engine to crank for a few seconds, and then measure the CKP sensor peak voltage.

6) Repeat the c) procedure several times and measure the highest peak voltage.
If the voltage is lower than standard range, inspect for coupler connection and metal particles or foreign material being stuck on the CKP sensor and generator rotor.
If the peak voltage is within the standard range, check the continuity between the CKP sensor lead wire coupler and ECM coupler.

CKP sensor peak voltage
When cranking [Standard]: 2 V or more

7) After finishing the CKP sensor inspection, install the removed parts.

CKP Sensor Resistance

1) Lift and support the fuel tank. ☞(Page 1G-7)
2) Disconnect the CKP sensor lead wire coupler (1).

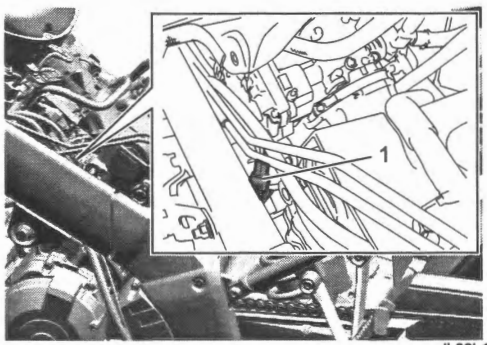

IL06L1130037-02

3) Measure the resistance between the terminals of the CKP sensor lead wire coupler (1).
If the resistance is not within the standard range, replace the CKP sensor with a new one. ☞(Page 1C-10)

CKP sensor resistance
20 °C (68 °F) [Standard]: 168 – 252 Ω

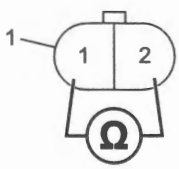

IL41K1130019-01

4) After finishing the CKP sensor inspection, install the removed parts.

CKP Sensor Removal and Installation

BENL06L21306013

Refer to "Generator Removal" in Section 1J (Page 1J-5) and "Generator Installation" in Section 1J (Page 1J-7).

TO Sensor Inspection

BENL06L21306014

Refer to "TO Sensor Removal and Installation" (Page 1C-11).

TO Sensor Output Voltage

1) Remove the battery holder. ☞(Page 9D-39)
2) Connect the battery lead wire to battery.
3) Check the TO sensor power supply voltage and circuit. ☞(Page 1A-89)
4) Turn the ignition switch OFF and connect the ECM coupler.
5) Dismount the TO sensor from its bracket and connect the TO sensor coupler.
6) Connect the circuit tester to the wire harness as shown in the figure.

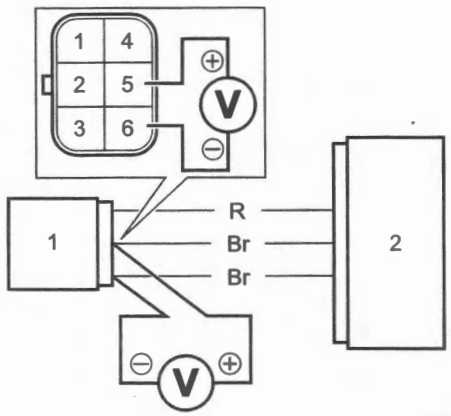

IL06L1130010-01

1. TO sensor	2. ECM

7) Turn the ignition switch ON, measure the TO sensor output voltage. If the voltage is not within the specified value, replace the TO sensor. ☞(Page 1C-11)

TO sensor output voltage
Normal [Standard]: 0.4 – 1.4 V
Leaning 45° [Standard]: 3.7 – 4.4 V

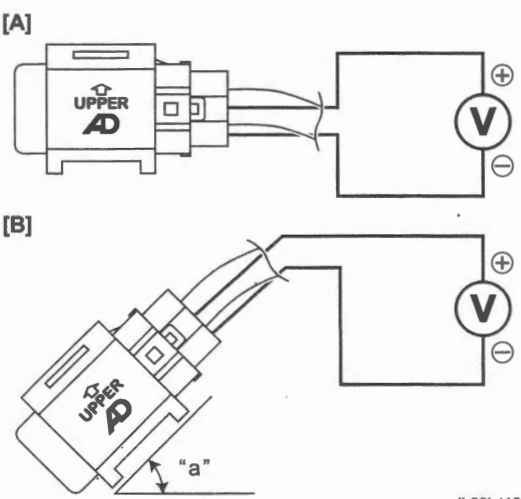

IL06L1130011-02

[A]:	When sensor is horizontal (normal) level.
[B]:	When sensor is leaned 45° "a" or more, left and right, from the horizontal level.

8) After finishing the TO sensor inspection, install the removed parts.

TO Sensor Resistance

1) Remove the TO sensor. ☞(Page 1C-11)
2) Measure the TO sensor resistance between the "T4" and "T6" of the TO sensor (1). If the resistance is out of the specified value, replace the TO sensor. ☞(Page 1C-11)

TO sensor resistance
[Standard]: 16500 – 22300 Ω

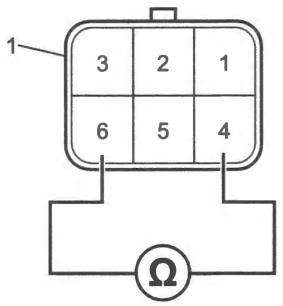

IJ27K2132016-01

3) After finishing the TO sensor inspection, install the removed parts.

TO Sensor Removal and Installation

BENL06L21306015

Removal

1) Remove the battery holder. ☞(Page 9D-39)
2) Dismount the TO sensor (1) from its bracket and disconnect the TO sensor coupler (2).

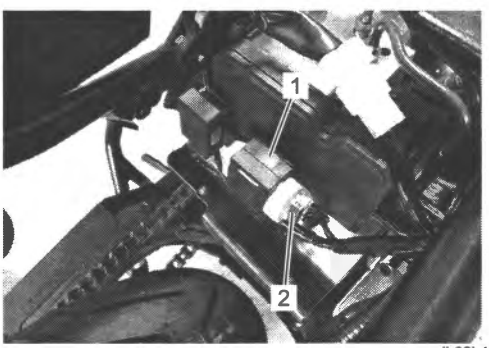

IL06L1130017-01

Installation

Install the TO sensor in the reverse order of removal. Pay attention to the following point:

- When installing the TO sensor, do not bend the TO sensor bracket (1) of ABS control unit/HU holder.

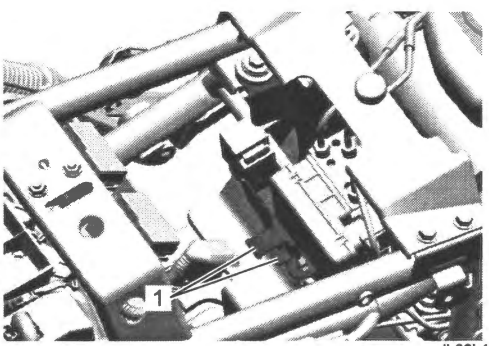

IL06L1130039-01

- When installing the TO sensor (1), bring the "UPPER" letters (2) backward.
- Position TO sensor directing its arrow mark (3) upward.
- TO sensor bracket end (4) should go through TO sensor.

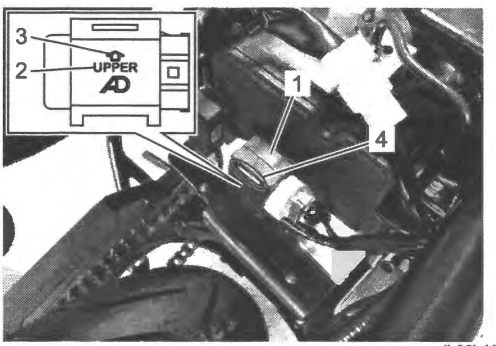

IL06L1130018-02

Accelerator Position Sensor Inspection

BENL06L21306016

Refer to "Precautions for Electric Throttle Control System" (Page 1C-1).

1) Remove the air cleaner box. ☞(Page 1D-6)
2) Disconnect the accelerator position sensor coupler (1).

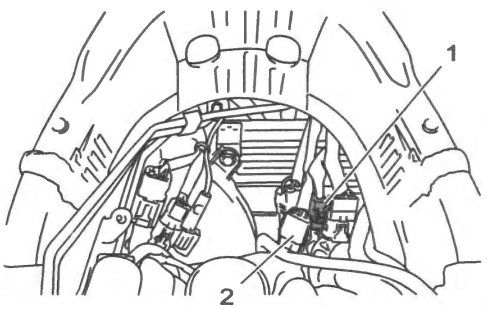

IL06L1130038-01

2. Immobilizer antenna coupler (if equipped)

3) Measure the output voltage of accelerator position sensor main and sub signals as follows. If faulty condition is found, replace the throttle grip assembly with a new one. ☞(Page 6B-6)
   a) Arrange 3 new 1.5 V batteries (1) in series, and check that total voltage is 4.5 – 5.0 V.
   b) Connect 3 new 1.5 V batteries terminal to the accelerator position sensor terminal as follows.
      - Accelerator position sensor (main): connect (–) terminal to the "T2" and (+) terminal to the "T1"
      - Accelerator position sensor (sub): connect (–) terminal to the "T6" and (+) terminal to the "T5"

c) Connect the voltmeter between the following terminal.
- Accelerator position sensor (main): between the "T3" and "T4"
- Accelerator position sensor (sub): between the "T1" and "T4"

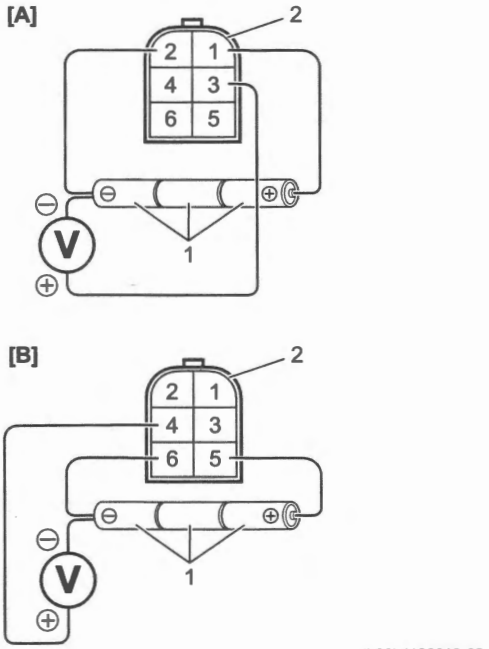

IL06L1130012-02

[A]: Accelerator position sensor (main)	2. Accelerator position sensor
[B]: Accelerator position sensor (sub)	

d) Check that voltage varies depending on throttle grip opening angle as shown in the following graph.

Accelerator position sensor (main) output voltage
Closed [Standard]: 0.50 – 0.62 V
Opened [Standard]: 3.18 – 3.30 V
Cruise control cancel switch position [Standard]: 0.30 – 0.42 V

Accelerator position sensor (sub) output voltage
Closed [Standard]: 0.84 – 0.96 V
Opened [Standard]: 4.19 – 4.31 V
Cruise control cancel switch position [Standard]: 0.64 – 0.76 V

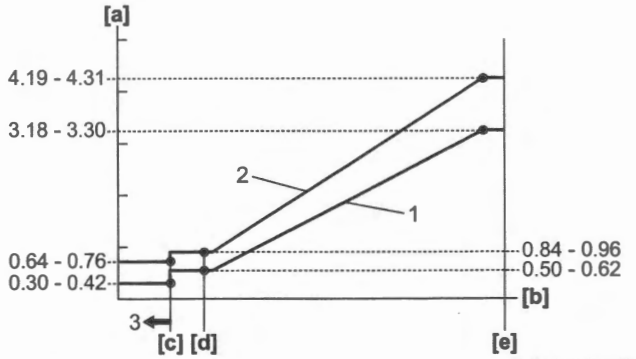

IL06L1130013-02

[a]: Voltage (V)	
[b]: Throttle grip opening angle	
[c]: Throttle grip: Approx. –8° (if equipped)	
[d]: Throttle grip: Fully closed position (0°)	
[e]: Throttle grip: Fully opened position (approx. 70°)	
1. Accelerator position sensor (main) output voltage	
2. Accelerator position sensor (sub) output voltage	
3. Cruise control cancel switch position (if equipped)	

4) After finishing the accelerator position sensor inspection, install the removed parts.

Accelerator Position Sensor Removal and Installation

BENL06L21306017

Refer to "Throttle Grip Assembly Removal and Installation" in Section 6B (Page 6B-6).

Throttle Valve Motor Inspection

BENL06L21306018

Refer to "Precautions for Electric Throttle Control System" (Page 1C-1).

Throttle Valve Operation Check

1) Turn the ignition switch OFF.
2) Remove the air cleaner box. ☞(Page 1D-6)
3) Check throttle valve operation as follows.
   If faulty condition is found, replace throttle body with a new one. ☞(Page 1D-7)
   a) Check that throttle valve (1) moves smoothly to both fully closed position and fully open position when pressed manually.

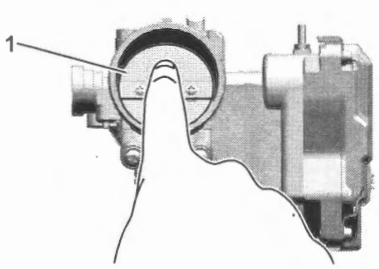

IL06L1130014-01

b) Check throttle valve (1) returns to fully closed position when finger pressure on throttle valve is released at both fully open position.

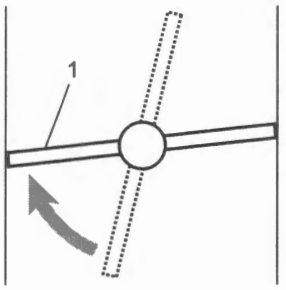

IL06L1130015-01

4) After finishing the throttle motor inspection, install the removed parts.

Throttle Valve Motor Check

1) Turn the ignition switch OFF.
2) Remove the throttle body. ☞(Page 1D-7)
3) Measure the throttle valve motor resistance between the "T5" and "T6" of the throttle body (1).
If faulty condition is found, replace throttle body with a new one. ☞(Page 1D-7)

Throttle valve motor resistance
20 °C (68 °F) [Standard]: 0.3 – 100 Ω

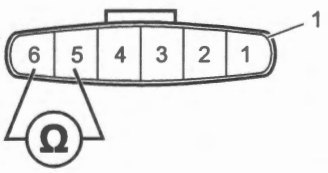

IL06L1130016-02

4) After finishing the throttle motor inspection, install the removed parts.

Throttle Valve Motor Relay Inspection

BENL06L21306019

Refer to "Throttle Valve Motor Relay Removal and Installation" (Page 1C-13).
Check the throttle valve motor relay in the following procedures.
If abnormality is found, replace the relay box (1) with a new one.

1) Check that there is no continuity between terminals "T15" and "21".
2) Check that there is continuity between terminals "T4" and "T10".
3) Connect battery positive (+) terminal and negative (–) terminal between terminals "T4" and "T10" and check for continuity between terminals "T15" and "T21".

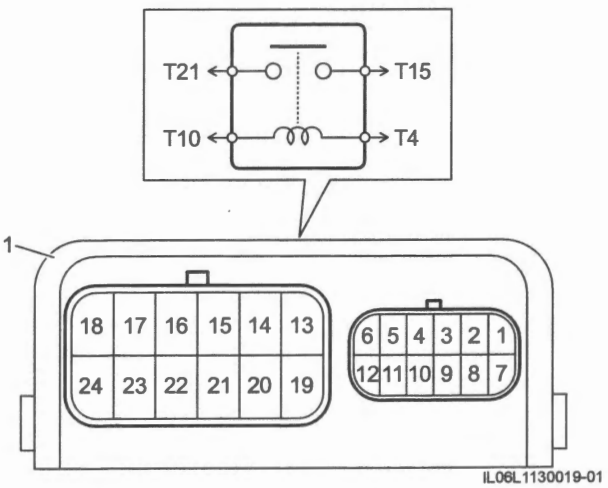

IL06L1130019-01

1. Relay box

Throttle Valve Motor Relay Removal and Installation

BENL06L21306020

Refer to "Relay Box Removal and Installation" in Section 9A (Page 9A-42).

GP Switch Inspection

BENL06L21306021

Refer to "GP Switch Inspection" in Section 5B (Page 5B-11).

GP Switch Removal and Installation

BENL06L21306022

Refer to "GP Switch Removal and Installation" in Section 5B (Page 5B-12).

Specifications

Tightening Torque Specifications

BENL06L21307001

Fastening part	Tightening torque			Note
	N·m	kgf-m	lbf-ft	
IAP sensor screw	1.3	0.13	0.95	☞(Page 1C-4)
IAT sensor screw	1.3	0.13	0.95	☞(Page 1C-5)
ECT sensor	18	1.8	13.5	☞(Page 1C-6)
HO2 sensor	25	2.5	18.5	☞(Page 1C-9)

Reference:
For the tightening torques of fasteners not specified in this page, refer to:
"Fasteners Information" in Section 0C (Page 0C-10)

Special Tools and Equipment

Special Tool

BENL06L21308001

09904–41031 SDS-II set ☞(Page 1C-3) 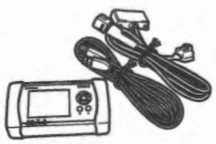	09904–41041 SDS-II (oscilloscope) set ☞(Page 1C-3) 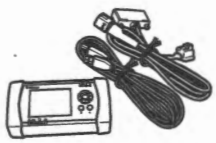
09904–41070 Conversion cable (ISO) ☞(Page 1C-3) 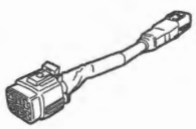	09917–47011 Vacuum pump gauge set ☞(Page 1C-4) 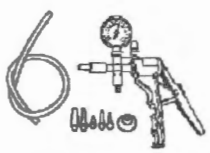

Engine Mechanical

Precautions

Precautions for Engine Mechanical

BENL06L21400001

Refer to "General Precautions" in Section 00 (Page 00-1) and "Precautions for Electrical Circuit Service" in Section 00 (Page 00-2).

NOTE

Identify the position of each removed part. Organize the parts in their respective groups (e.g., intake, exhaust) so that they can be reinstalled in their original positions.

Diagnostic Information and Procedures

Compression Pressure Check

BENL06L21404001

The compression pressure reading of a cylinder is a good indicator of its internal condition.
The decision to overhaul the cylinder is often based on the results of a compression test. Periodic maintenance records kept at your dealership should include compression readings for each maintenance service.

NOTE

- **Before checking the engine for compression pressure, make sure that the cylinder head bolts are tightened to the specified torque values and the valves are properly adjusted.**
- **Make sure that the battery is in fully-charged condition.**

1) Warm up the engine.
2) Disconnect the fuel injector coupler. ☞(Page 1G-16)
3) Disconnect the all spark plug caps and remove each spark plug (Side). ☞(Page 0B-8)
4) Install the compression gauge and adapter in the spark plug hole. Make sure that the connection is tight.

Special tool
(A): 09915–64512
(B): 09915–63311

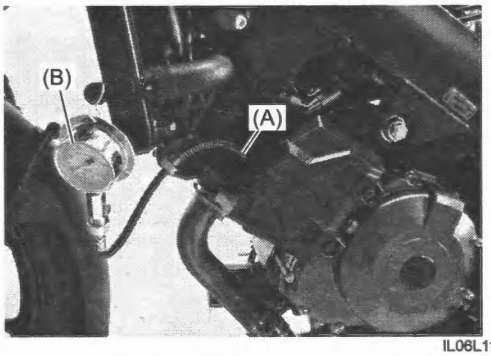

IL06L1140002-01

5) Keep the throttle grip in the fully-opened position.

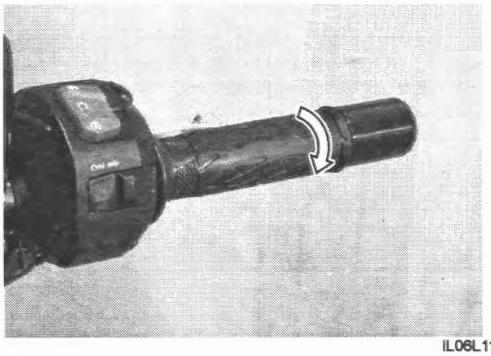

IL06L1140003-01

6) Press the starter button and crank the engine for a few seconds. Record the maximum gauge reading as the cylinder compression.
7) Repeat this procedure with the other cylinder.

Compression pressure
[Standard]: 1100 – 1500 kPa (11 – 15 kgf/cm², 160 – 218 psi)
[Limit]: 800 kPa (8 kgf/cm², 116 psi)

Compression pressure difference
[Limit]: 200 kPa (2 kgf/cm², 29 psi)

If compression pressure is less than the service limit, it is considered any of the following reasons:

- Excessively worn cylinder walls
- Worn piston or piston rings
- Piston rings stuck in grooves
- Poor valve seating
- Ruptured or otherwise defective cylinder head gasket

Overhaul the engine in the following cases:

- Compression pressure in one of the cylinder is 800 kPa (8 kgf/cm², 114 psi) or less.
- Compression pressures of all cylinders are 1100 kPa (11 kgf/cm², 160 psi) or less.
- Compression pressure difference between 2 cylinders is more than 200 kPa (2 kgf/cm², 28 psi).

8) After checking the compression pressure, install the removed parts.

Repair Instructions

Intake System Components

BENL06L21406001

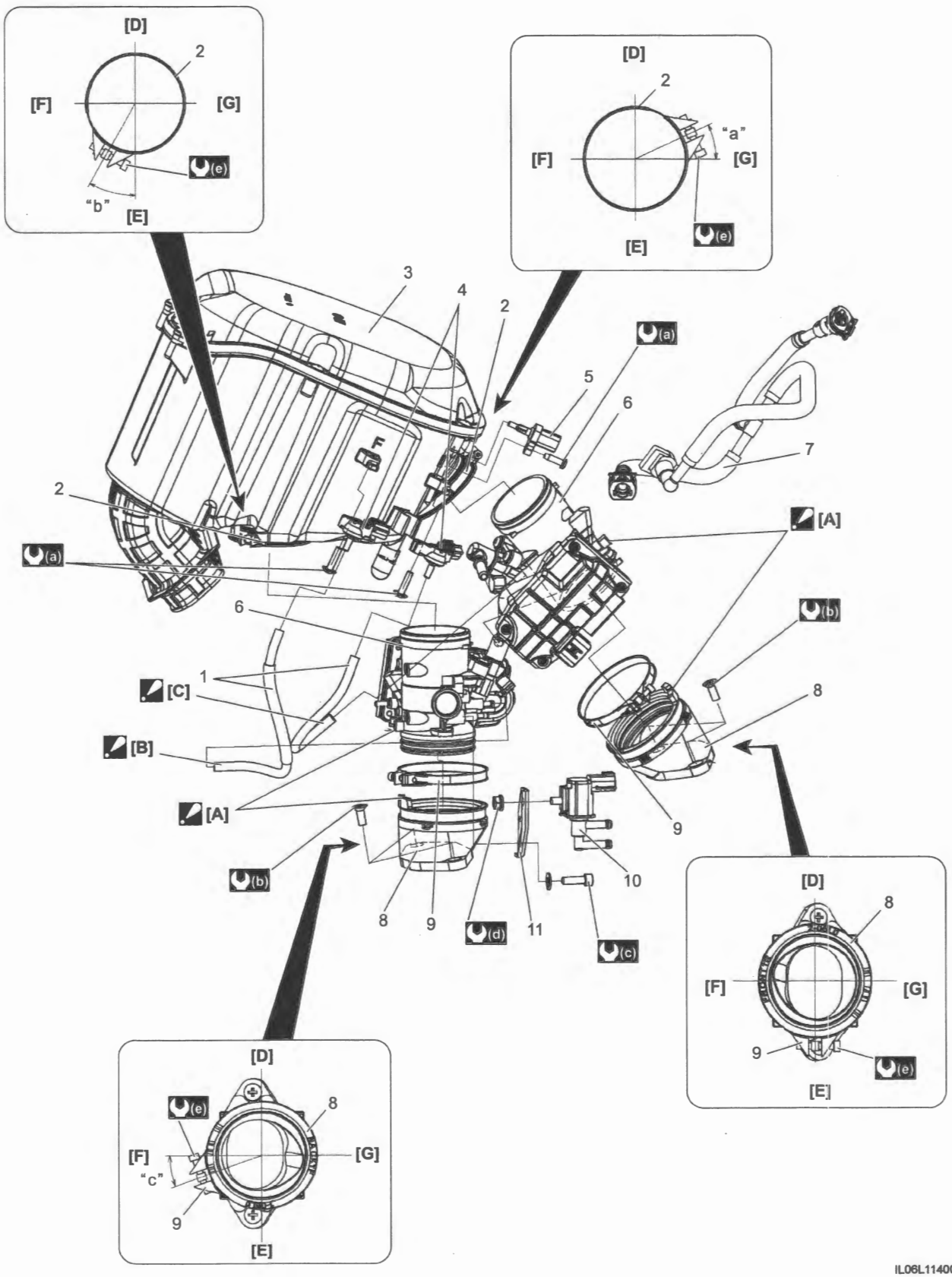

IL06L1140095-02

[A]: Align protrusion on the throttle body with cutaway in the intake pipe.	3. Air cleaner box	"a": 25°
[B]: Face the yellow paint marking to upward.	4. IAP sensor	"b": 30°
[C]: Face the white paint marking to upward.	5. IAT sensor	"c": 20°
[D]: Right side	6. Throttle body	(a) : 1.3 N·m (0.13 kgf-m, 0.95 lbf-ft)
[E]: Left side	7. Fuel feed hose	(b) : 8.4 N·m (0.86 kgf-m, 6.20 lbf-ft)
[F]: Front side	8. Intake pipe	(c) : 10 N·m (1.0 kgf-m, 7.5 lbf-ft)
[G]: Rear side	9. Intake pipe clamp	(d) : 6.7 N·m (0.68 kgf-m, 4.95 lbf-ft)
1. IAP sensor hose	10. EVAP system purge control solenoid valve	(e) : 1.5 N·m (0.15 kgf-m, 1.10 lbf-ft)
2. Air cleaner outlet tube clamp	11. EVAP system purge control solenoid valve bracket	

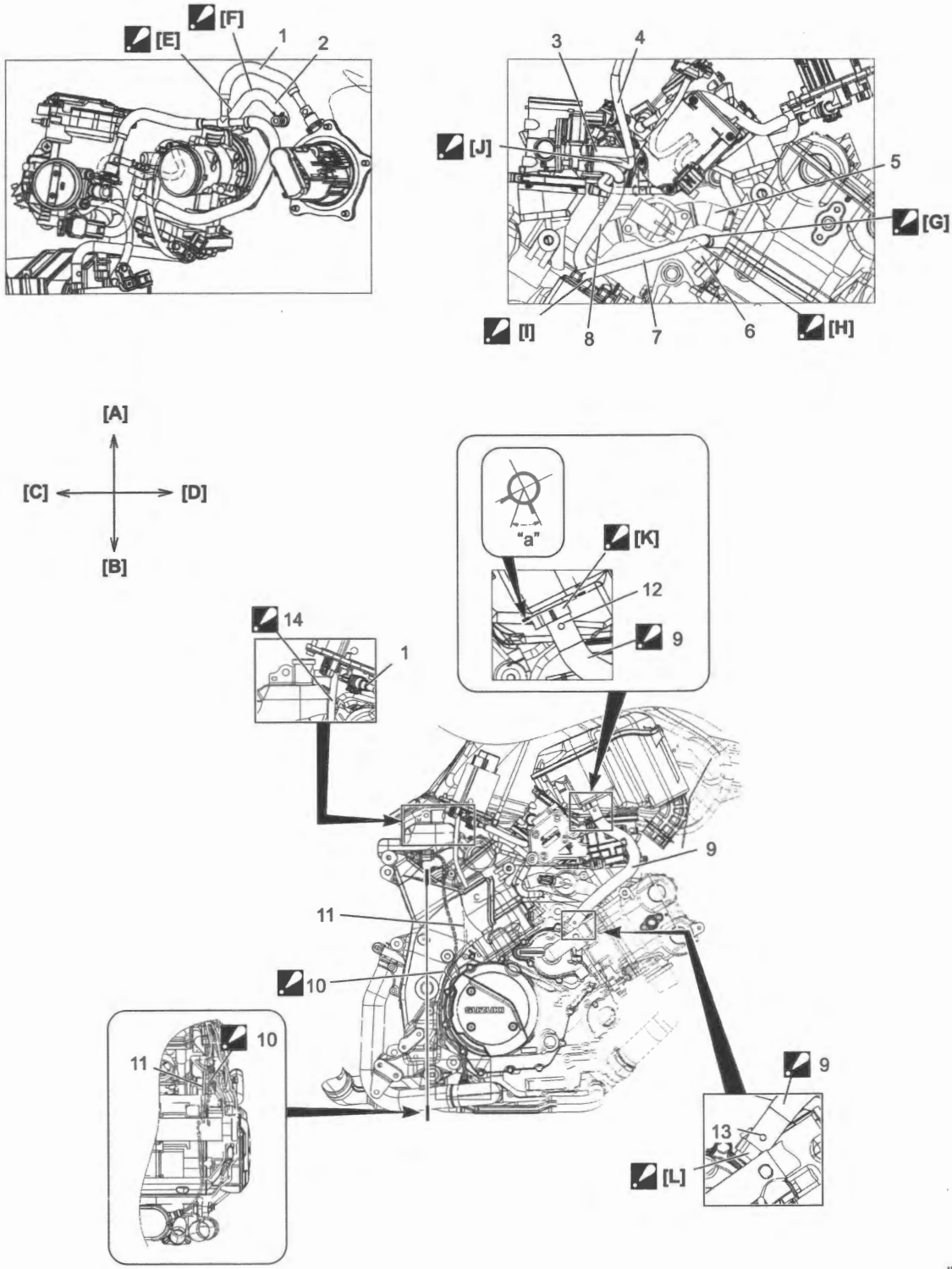

IL06L1140006-02

[A]: Upper side	[J]: Pass the IAP sensor hose to the under of the purge hose No.2.	7. Surge hose No.2
[B]: Lower side	[K]: Make sure that the clearance between the air cleaner box and clip clearance is 3mm (0.12 in).	8. Purge hose No.1
[C]: Rear side	[L]: Make sure that the clearance between the clutch cover and clip clearance is 5mm (0.20 in). Face the clip end right side.	9. PCV hose Make sure that the PCV hose contact the air cleaner box and crankcase.
[D]: Front side	1. Fuel feed hose	10. HO2 sensor lead wire Pass the HO2 sensor lead wire to the inside of the GP switch lead wire, and then pass the HO2 sensor lead outside.
[E]: Pass the surge hose No.1 to the under of the fuel feed hose.	2. Surge hose No.1	11. GP switch lead wire
[F]: Pass the surge hose No.1 to the inside of the fuel feed hose.	3. Purge hose No.2	12. Paint mark (yellow)
[G]: Pass the surge hose No.2 to the under of the connector inlet hose.	4. IAP sensor hose	13. Paint mark (blue)
[H]: Pass the surge hose No.2 to the upper of the cam chain tensioner adjuster.	5. Connector inlet hose	14. Overflow hose Pass the overflow hose to the rear of the fuel feed hose.
[I]: Pass the purge hose No.1 to the under of the surge hose No.2.	6. Cam chain tensioner adjuster	"a": 45°

Air Cleaner Element Removal and Installation

BENL06L21406002

For removal and installation procedure, refer to "Air Cleaner Element" in Section 0B (Page 0B-3). And if necessary, replace the air cleaner element with a new one.

Air Cleaner Element Inspection

BENL06L21406003

Refer to "Air Cleaner Element" in Section 0B (Page 0B-3).

Air Cleaner Box Removal and Installation

BENL06L21406004

Refer to "Fuel Tank Removal and Installation" in Section 1G (Page 1G-7).

Removal

1) Disconnect the IAP sensor couplers (1), IAP sensor hoses (2) and IAT sensor coupler (3) from the IAP sensor and IAT sensor.

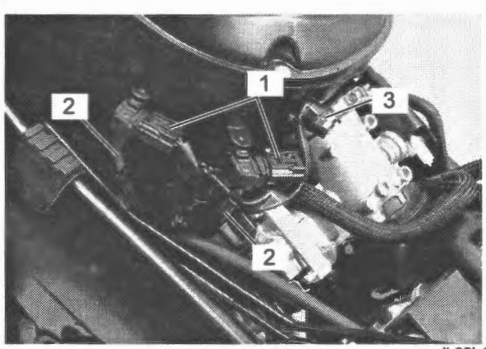

IL06L1140008-01

2) Loosen the air cleaner outlet tube clamp screws (1).

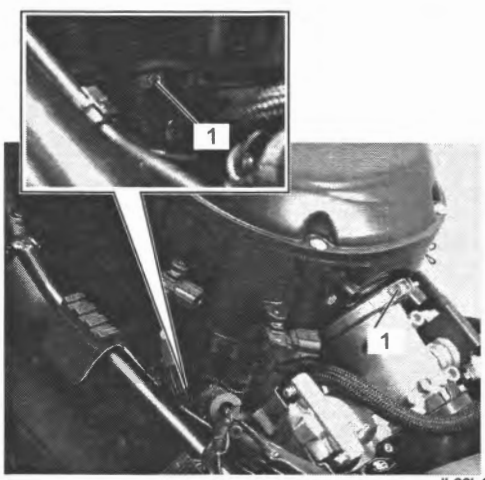

IL06L1140009-01

3) Disconnect the PAIR hose (1) from the air cleaner box.

4) Disconnect the PCV hose (2) from the air cleaner box, and then remove the air cleaner box (3).

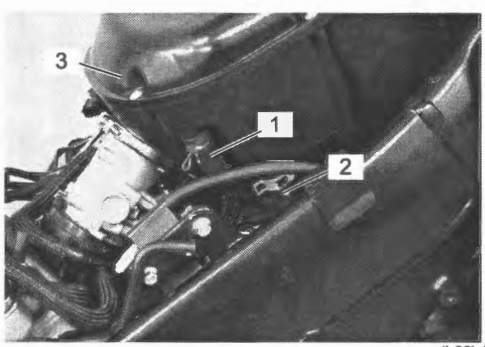

IL06L1140010-01

Installation

Install the air cleaner box in the reverse order of removal. Pay attention to the following points:

- Connect the PCV hose. Refer to "Intake System Components" (Page 1D-3).
- Connect the PAIR hose. Refer to "PAIR System Hose Routing Diagram" in Section 1B (Page 1B-1).
- Position the air cleaner outlet tube clamps and tighten the air cleaner outlet tube clamp screw (1) to the specified torque. ☞(Page 1D-3)

Tightening torque
Air cleaner outlet tube clamp screw (a): 1.5 N·m (0.15 kgf-m, 1.10 lbf-ft)

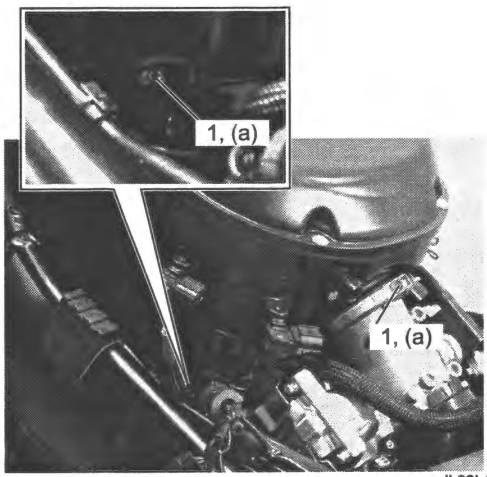

IL06L1140011-01

Throttle Body Components

BENL06L21406005

Refer to "Intake System Components" (Page 1D-3).

Throttle Body Removal and Installation

BENL06L21406006

Refer to "Precautions for Electric Throttle Control System" in Section 1C (Page 1C-1).

NOTICE

The electric throttle body will lose its original performance if it is disassembled.
Do not disassemble the electric throttle body.
If any faulty condition is found, replace the electric throttle body with a new one.

NOTE

Does not have to adjust the throttle valve synchronization among two cylinders because it is adjusted automatically at idle speed after warming up by ECM.

Removal

1) Remove the following parts.
   - Fuel tank: ☞(Page 1G-7)
   - Air cleaner box: ☞(Page 1D-6)
2) Disconnect the fuel feed hose from the fuel injector. ☞(Page 1G-5)
3) Remove the EVAP system purge control solenoid valve (1) from its bracket.

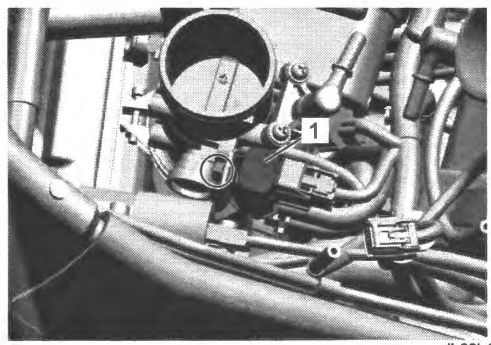

IL06L1140097-01

4) Disconnect the EVAP purge No.3 hoses (1) from the throttle bodies.

Front side

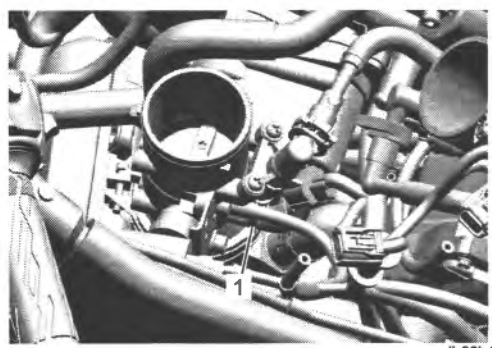

IL06L1120028-01

Rear side

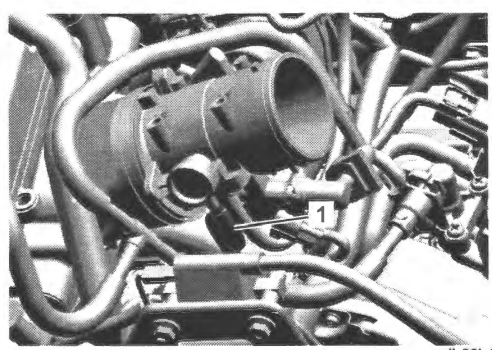

IL06L1120029-01

5) Disconnect the fuel injector couplers (1) from the injectors.

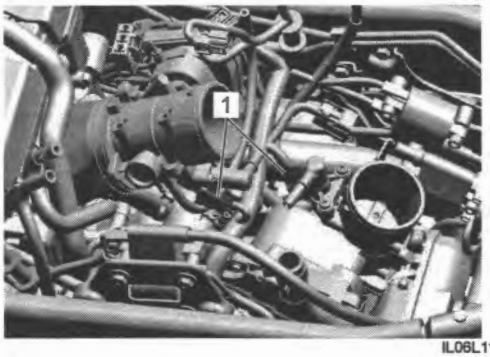

IL06L1140099-01

6) Disconnect the throttle body sensor couplers (1) from the throttle bodies.

Front side

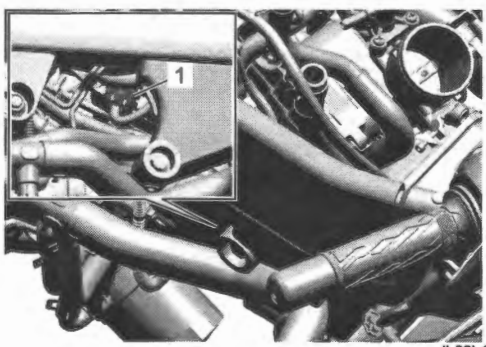

IL06L1140100-01

Rear side

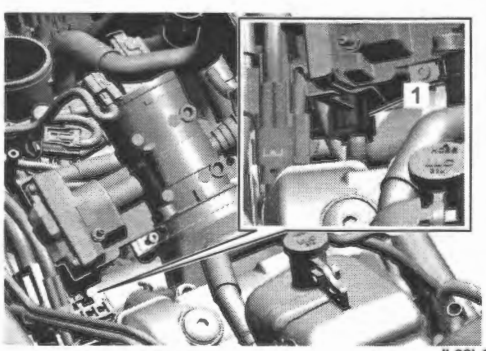

IL06L1140101-01

7) Loosen the intake pipe clamp screws (1), and then remove the throttle bodies.

Front side

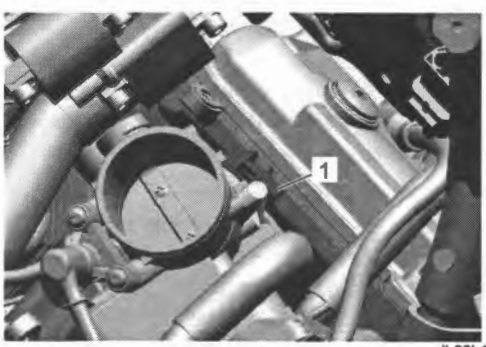

IL06L1140102-01

Rear side

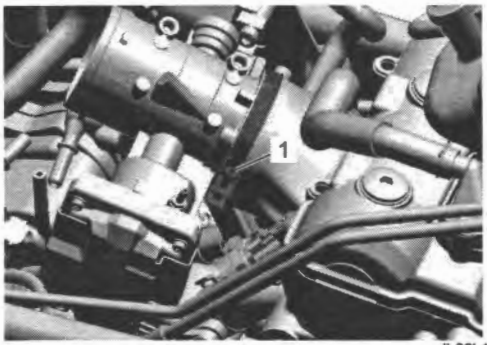

IL06L1140103-01

8) Remove the IAP sensor hose (1), injector (2) and bracket (3) (front side only) from the throttle body, if necessary.

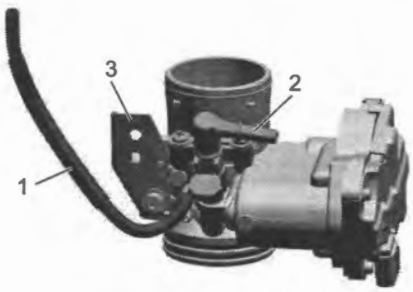

IL06L1140104-01

Installation

Install the throttle body in the reverse order of removal. Pay attention to the following points:

- Tighten the injector screws (1) and bracket bolt (2) to the specified torque.

Tightening torque
Injector screw (a): 3.5 N·m (0.36 kgf-m, 2.60 lbf-ft)
Bracket bolt (b): 10 N·m (1.0 kgf-m, 7.5 lbf-ft)

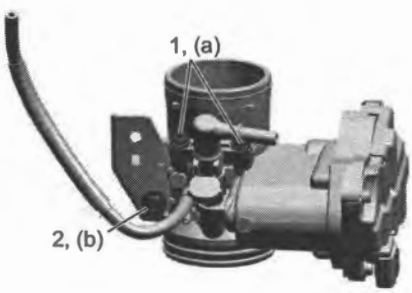

IL06L1140105-01

- Align protrusion (1) on the throttle body (2) with cutaway in the intake pipe.

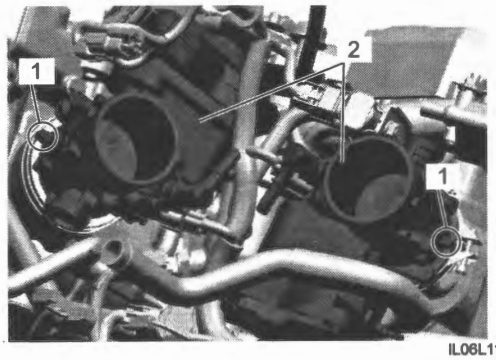

IL06L1140022-01

- Tighten the intake pipe clamp screws (1) to the specified torque.

Tightening torque
Intake pipe clamp screw (a): 1.5 N·m (0.15 kgf-m, 1.10 lbf-ft)

Front side

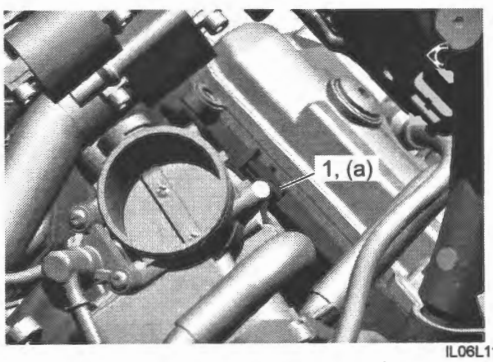

IL06L1140106-01

Rear side

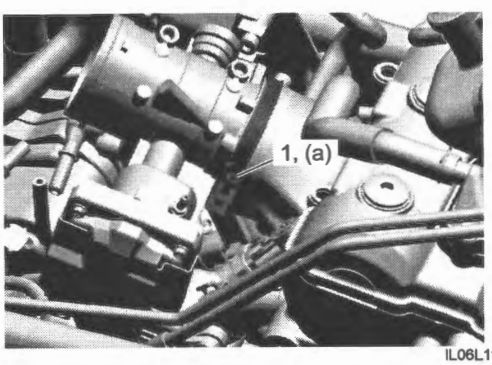

IL06L1140108-01

- Connect the EVAP purge hoses "EVAP Canister Hose Routing Diagram" in Section 1B (Page 1B-2).

- Tighten the EVAP system purge control solenoid valve nut (1) to the specified torque.

Tightening torque
EVAP system purge control solenoid valve nut (a): 6.7 N·m (0.68 kgf-m, 4.95 lbf-ft)

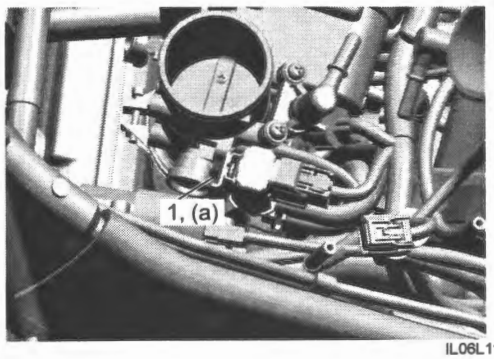

IL06L1140109-01

Reset the TP fully closed learned value and ISC aperture learned value when replacing the throttle body. ☞(Page 1C-3)

Throttle Body Inspection and Cleaning

BENL06L21406007

Refer to "Precautions for Electric Throttle Control System" in Section 1C (Page 1C-1).
Remove the throttle bodies. ☞(Page 1D-7)

Inspection
Check following items for any defects or clogging.
Replace the damaged part or throttle body, if necessary.

NOTICE

Do not snap the throttle valve from the open to full close. It may cause damage to the gear inside the throttle body.

- Throttle valves
- Cushion seals
- Fuel injectors
- Purge hoses
- IAP sensor hoses

Cleaning
Clean the main bore, throttle valve and passage(s) using a cotton swab moistened with a carburetor cleaning chemical.

NOTICE

- **Some carburetor cleaning chemicals are very corrosive. Always follow the chemical manufacturer's instructions for proper use, handling and storage.**
- **Do not dip the throttle body in a carburetor cleaning chemical or do not splay the cleaning chemical directly to the throttle valve. Cleaning chemical will penetrate into electronic parts resulting in cause of malfunction.**

- **Do not use wire to clean passages. Wire may damage them.**
- **Do not apply any cleaning chemical to parts made of rubber and plastic materials. Cleaning chemical may damage these parts.**

Intake Pipe Removal and Installation

BENL06L21406008

Refer to "Throttle Body Removal and Installation" (Page 1D-7).

Removal

Remove the intake pipes (1).

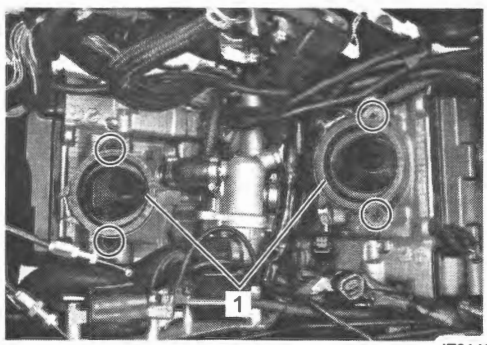

IE31J1140163-01

Installation

Install the intake pipe in the reverse order of removal. Pay attention to the following points:

NOTE

The intake pipe can be identified by the marks.

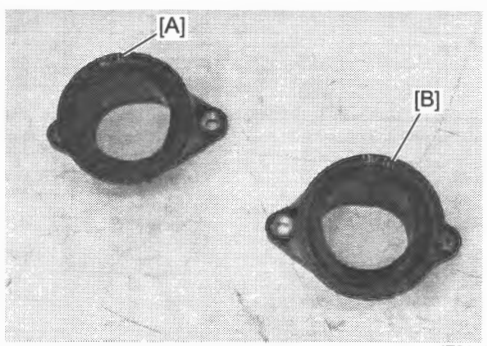

IE31J1140164-01

[A]:	F (Front cylinder head intake pipe)
[B]:	R (Rear cylinder head intake pipe)

- Apply adhesive to the intake pipe (1) and install the new O-ring to the intake pipe.

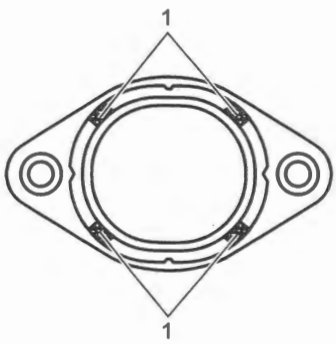

IH18K1140300-02

- Apply grease to the new O-ring and install the intake pipe.

NOTE

Face the up mark (1) on the intake pipe to upper.

"A": Grease 99000–25011 (SUZUKI SUPER GREASE A)

Tightening torque
Intake pipe mounting screw (a): 8.4 N·m (0.86 kgf-m, 6.20 lbf-ft)

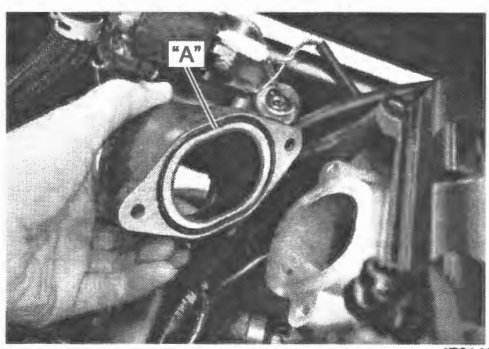

IE31J1140165-01

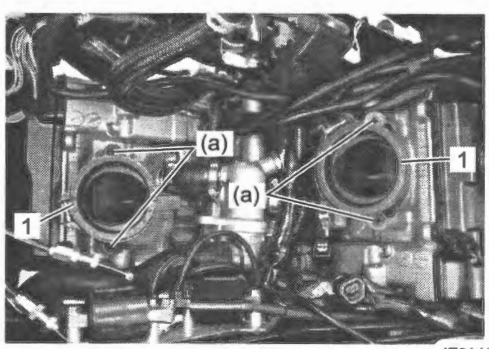

IE31J1140166-01

Cylinder Head Cover/Camshaft Components

BENL06L21406009

NOTE

The parts structure are also the same as front cylinder and rear cylinder.

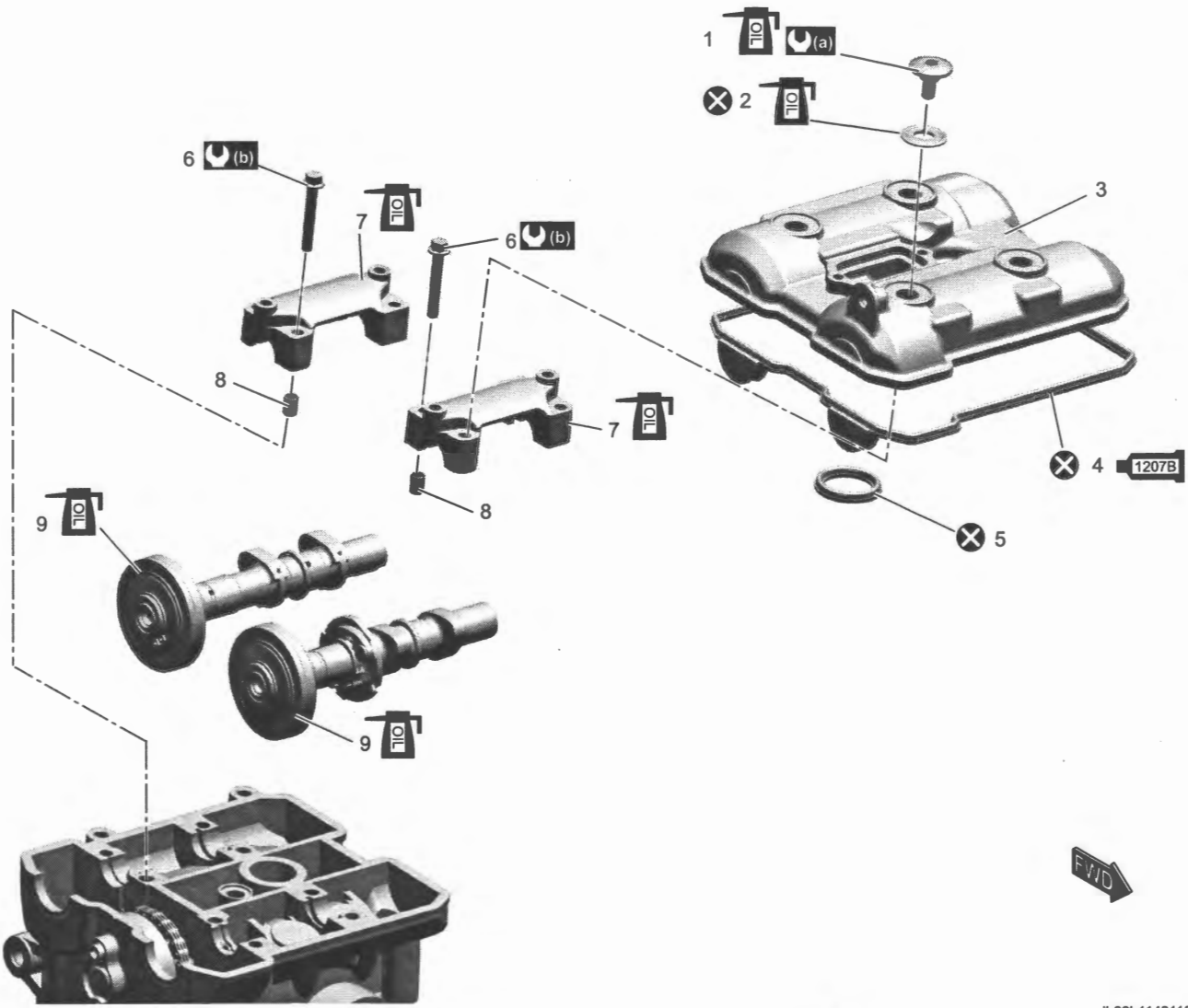

IL06L1140110-01

1. Cylinder head cover bolt	6. Camshaft journal holder bolt	(b) : 10 N·m (1.0 kgf-m, 7.5 lbf-ft)
2. Cylinder head cover bolt gasket	7. Camshaft journal holder	OIL : Apply engine oil.
3. Cylinder head cover	8. Camshaft journal holder pin	1207B : Apply sealant.
4. Cylinder head cover gasket No.1	9. Camshaft	: Do not reuse.
5. Cylinder head cover gasket No.2	(a) : 14 N·m (1.4 kgf-m, 10.5 lbf-ft)	

Cylinder Head Cover Removal and Installation

BENL06L21406010

Refer to "Air Cleaner Box Removal and Installation" (Page 1D-6).

Removal

Front cylinder head cover

1) Remove the following parts.
   - Regulator/rectifier: ☞(Page 1J-8)
   - Radiator: ☞(Page 1F-8)
2) Remove the PAIR reed valve. ☞(Page 1B-3)
3) Disconnect the spark plug cap (Center) (1) from the cylinder head.
4) Remove the cylinder head cover (2) and its gaskets from the cylinder head.

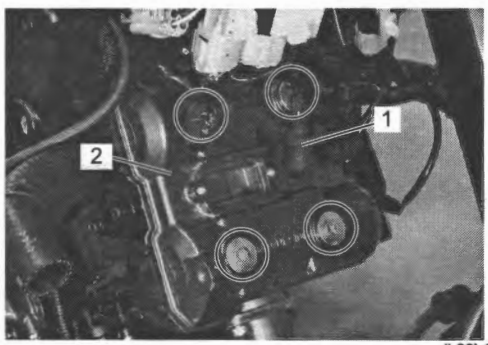

IL06L1140026-01

Rear cylinder head cover

1) Remove the radiator reservoir tank. ☞(Page 1F-10)
2) Remove the PAIR reed valve. ☞(Page 1B-3)
3) Disconnect the spark plug cap (Center) (1) from the cylinder head.
4) Remove the cylinder head cover (2) and its gaskets from the cylinder head.

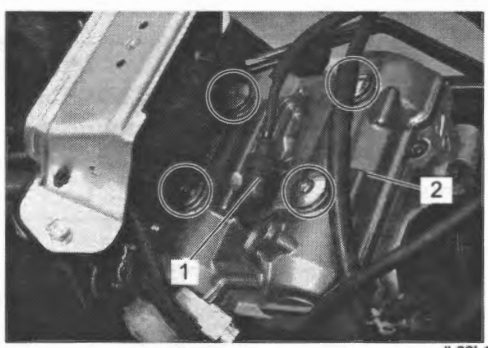

IL06L1140027-01

Installation

Install the cylinder head cover in the reverse order of removal. Pay attention to the following points:

- Install the new gaskets (1) to each cylinder head cover.
- Apply sealant to the "A" of the gasket as shown.

  "A": Sealant 99000–31140 (SUZUKI BOND 1207B)

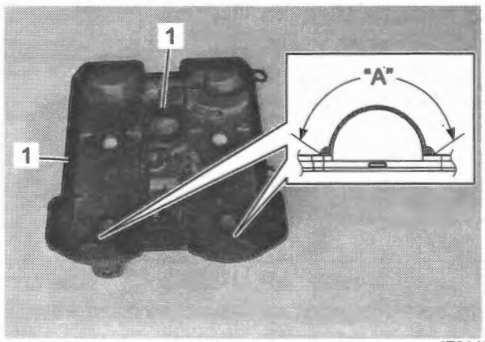

IE31J1140014-01

- Place the cylinder head covers on each cylinder head.

NOTE

Identify the cylinder head covers according to the following embossed letters.
Front cylinder head cover (1): [A]
Rear cylinder head cover (2): [B]

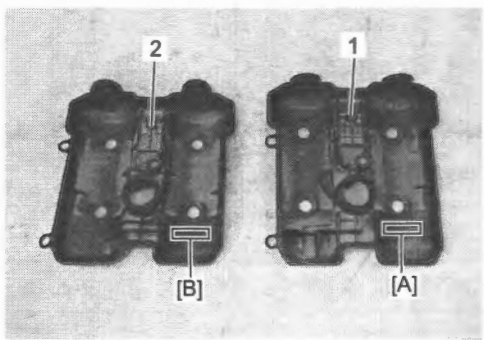

IE31J1140015-01

[A]: FRONT	[B]: REAR

- Apply engine oil to both sides of the new gaskets and cylinder head cover bolt threads.

- Tighten the cylinder head cover bolts (1) to the specified torque.

Tightening torque
Cylinder head cover bolt (a): 14 N·m (1.4 kgf-m, 10.5 lbf-ft)

Front cylinder head cover

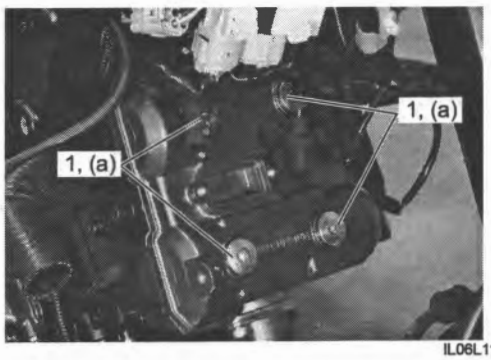

IL06L1140028-01

Rear cylinder head cover

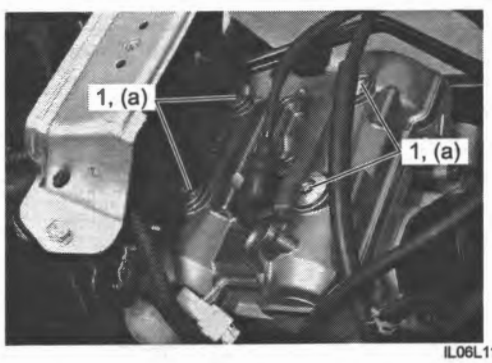

IL06L1140029-01

- Connect the spark plug caps. ☞(Page 1H-6)

Camshaft Removal

BENL06L21406011

Refer to "Cylinder Head Cover Removal and Installation" (Page 1D-12) and "Spark Plug Removal and Installation" in Section 1H (Page 1H-6).

Front Cylinder Camshaft

1) Remove the accessory bar. (If equipped) ☞(Page 9E-7)
2) Remove the EVAP canister No.2 bracket bots (1) from the generator cover, and then move the EVAP canister (2) in arrow direction.

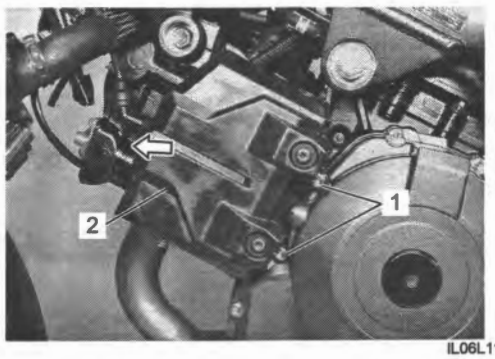

IL06L1140111-01

3) Remove the valve timing inspection plug (1) and generator cover plug (2) from the generator cover.

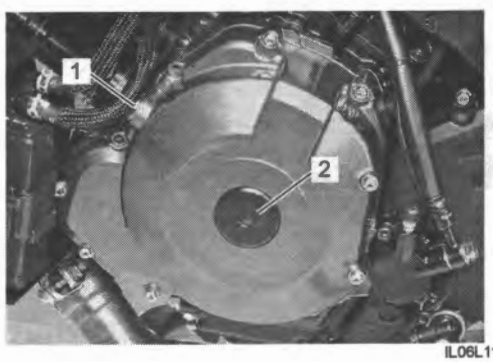

IL06L1140031-01

4) Turn the crankshaft to bring the "F | T" line (1) on generator rotor to the index mark (2) of the valve timing inspection hole and also to bring the camshafts to the position as shown.

NOTE

At the above condition, the front cylinder is at TDC on compression stroke and also the engraved lines (3) on the camshaft sprockets are parallel with the mating surface of the front cylinder head.

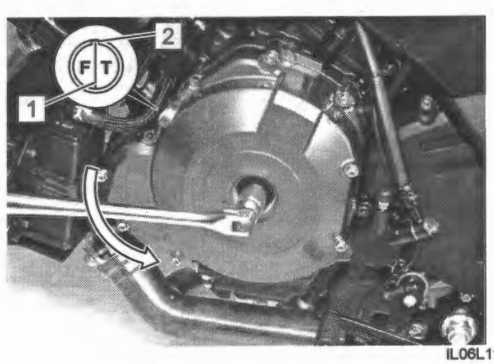

IL06L1140032-01

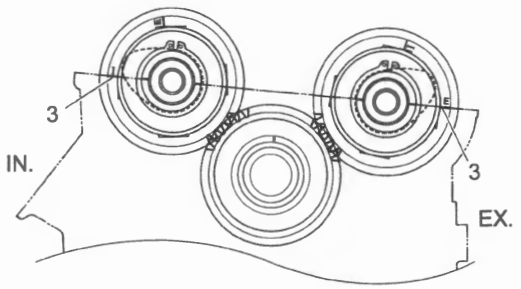

IE31J1140021-04

5) Remove the camshaft journal holders (1) from the cylinder head.

NOTICE

Be sure to loosen the camshaft journal holder bolts evenly by shifting the wrench diagonally.

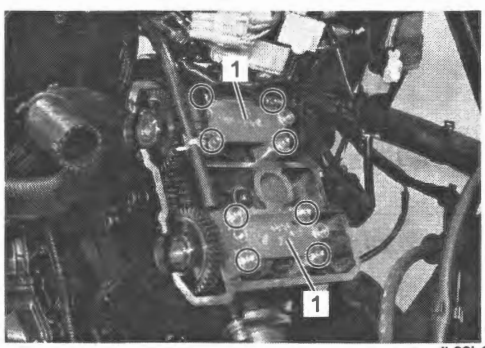

IL06L1140033-01

6) Remove the dowel pins (1) from the cylinder head.
7) Remove the intake camshaft (2) and exhaust camshaft (3) from the cylinder head.

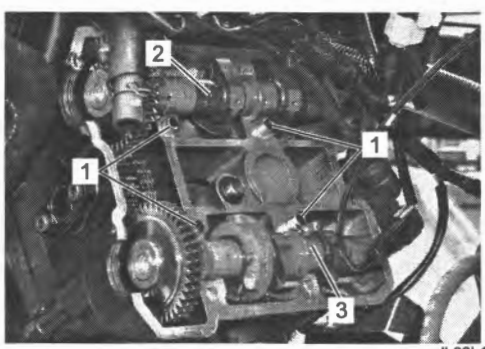

IL06L1140034-01

Rear Cylinder Camshaft

1) Rotate the crankshaft 360 degrees (1 turn) counterclockwise and align the "F | T" line (1) on the generator rotor with the index mark (2) of the valve timing inspection hole.

NOTE

At the above condition, the rear cylinder is at ATDC 90° on expansion stroke and also the engraved lines (3) on the camshaft sprockets are parallel with the mating surface of the rear cylinder head.

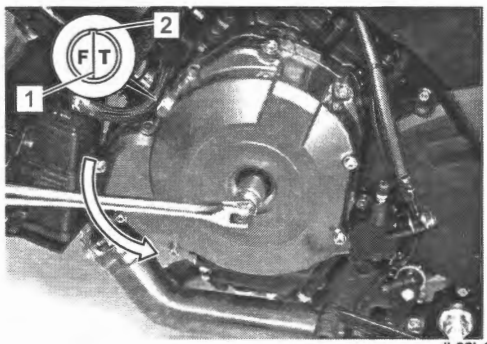

IL06L1140035-01

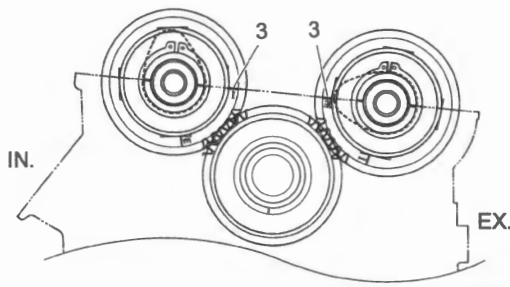

IE31J1140025-03

2) Remove the camshaft journal holders (1).

NOTICE

Be sure to loosen the camshaft journal holder bolts evenly by shifting the wrench diagonally.

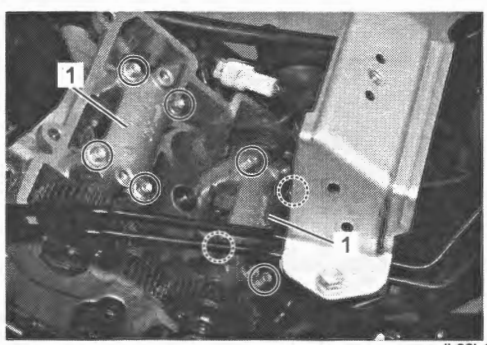

IL06L1140036-01

3) Remove the dowel pins (1).
4) Remove the intake camshaft (2) and exhaust camshaft (3).

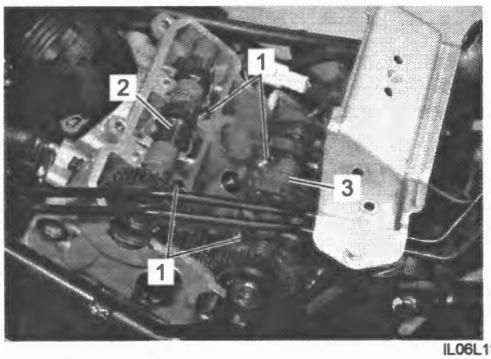

IL06L1140037-01

Camshaft Installation

BENL06L21406012

Front Cylinder Camshaft

1) Turn the crankshaft to bring the "F | T" line (1) on generator rotor to the index mark (2) of the valve inspection hole and also to bring the cam drive idle gear/sprocket No. 2 (Front cylinder) (3) to the position as shown.

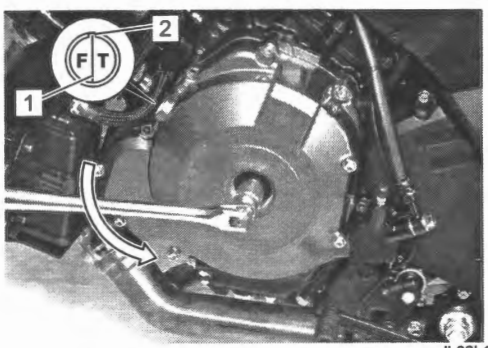

IL06L1140035-01

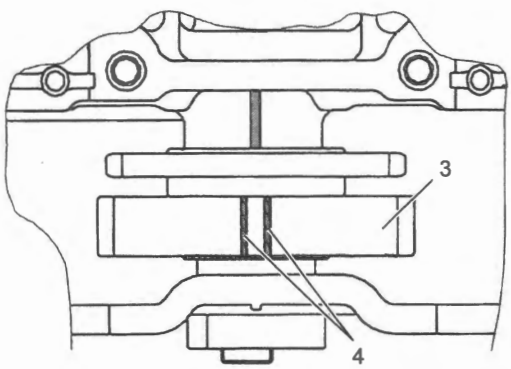

IE31J1140029-01

4. Paint

2) Apply engine oil to the camshaft journals and cam surfaces.

NOTE

Identify the camshafts according to the following embossed letters.
Intake camshaft (1): [A]
Exhaust camshaft (2): [B]

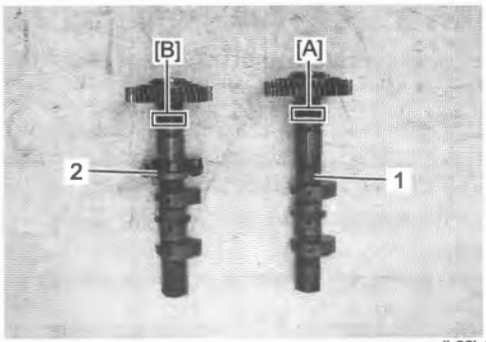

IL06L1140038-01

3) Align the engraved lines (1) on the camshafts so that it is parallel with mating surface of the cylinder head. Check that the cam faces (2) are located as shown.
4) Install the dowel pins (3).

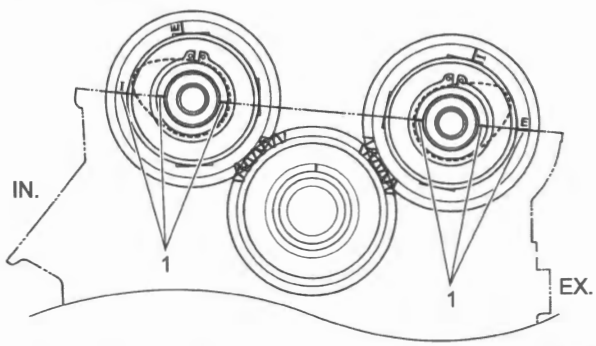

IE31J1140032-04

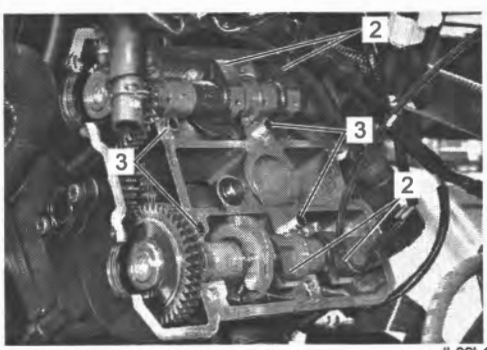

IL06L1140039-01

5) Apply engine oil to the camshaft journal holders (1).
6) Install the camshaft journal holders (1), intake and exhaust.
7) Fasten the camshaft journal holders (1) evenly by tightening the camshaft journal holder bolts sequentially and diagonally.

NOTICE

Damage to head or camshaft journal holder thrust surfaces may result if the camshaft journal holders (1) are not drawn down evenly.

NOTE

Each camshaft journal holder (1) is identified with a cast-on letters.

8) Tighten the camshaft journal holder bolts to the specified torque.

Tightening torque
Camshaft journal holder bolt (a): 10 N·m (1.0 kgf-m, 7.5 lbf-ft)

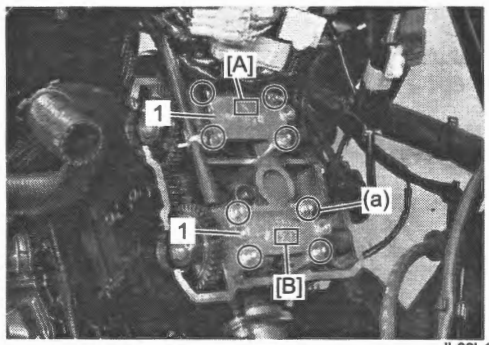

IL06L1140041-01

[A]: INF	[B]: EXF

9) Recheck the front cylinder camshaft positions, intake and exhaust.

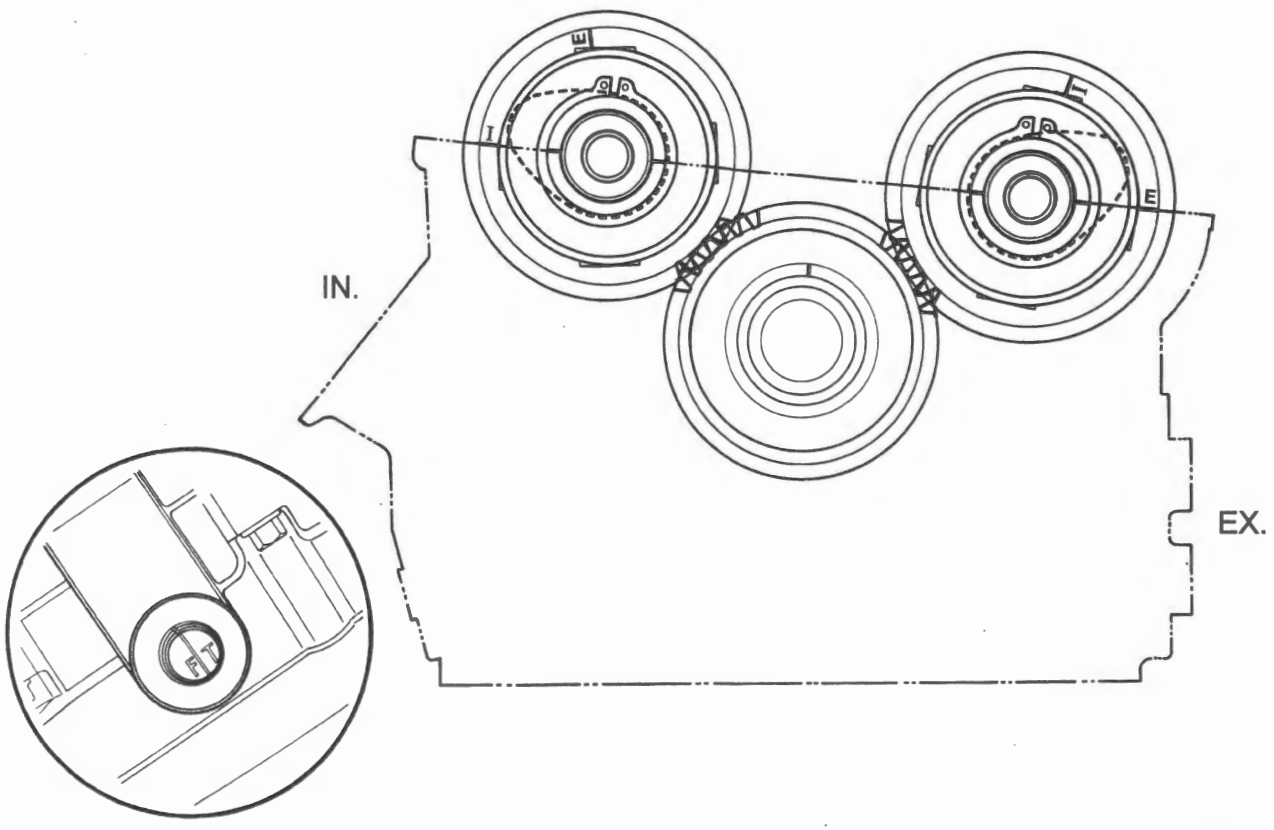

IE31J1140035-01

Rear Cylinder Camshaft

1) From the position where the front cylinder camshafts have now been installed, rotate the crankshaft 360 degrees (1 turn) and align the "F | T" line (1) on the generator rotor with the index mark (2) of the valve timing inspection hole.

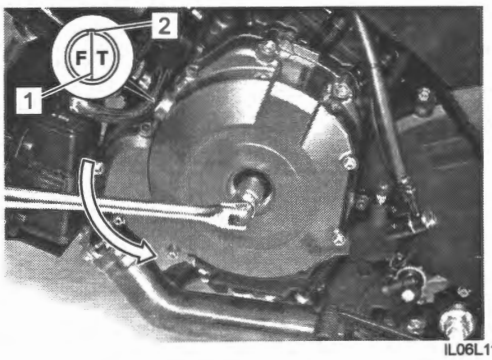

IL06L1140035-01

2) Apply engine oil to the camshaft journal and cam surfaces.

NOTE

Identify the camshafts according to the following embossed letters.
Intake camshaft (1): [A]
Exhaust camshaft (2): [B]

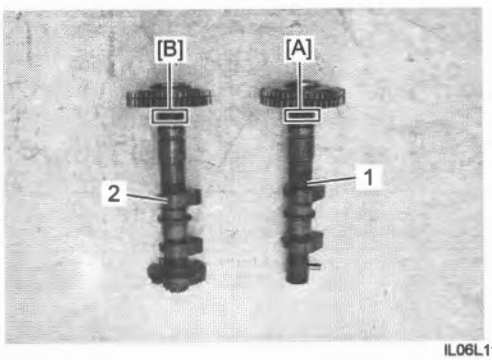

IL06L1140043-01

[A]: INR	[B]: EXR

3) Align the engraved lines (1) on the camshafts so that it is parallel with mating surface of the cylinder head. Check that the cam faces (2) are located as shown.

4) Install the dowel pins (3).

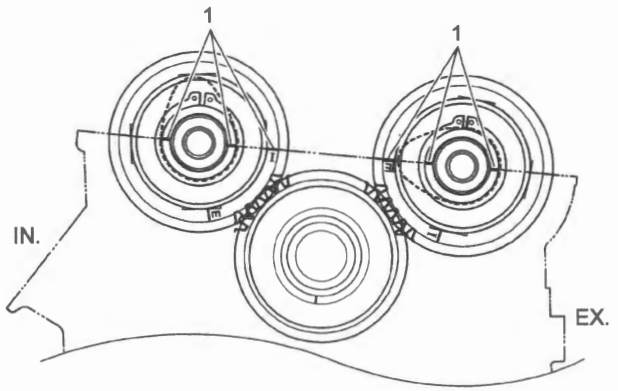

IE31J1140039-04

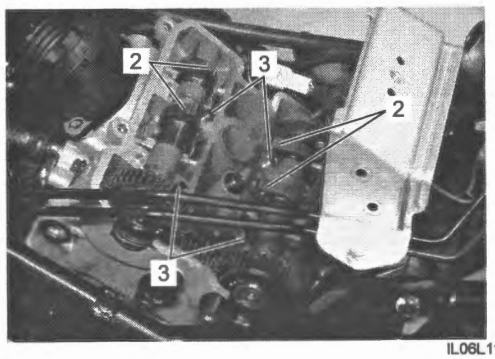

IL06L1140044-01

1) Apply engine oil to the camshaft journal holders (1).

2) Install the camshaft journal holders (1), intake and exhaust.

3) Fasten the camshaft journal holders (1) evenly by tightening the camshaft journal holder bolts sequentially and diagonally.

NOTICE

Damage to head or camshaft journal holder thrust surfaces may result if the camshaft journal holders (1) are not drawn down evenly.

NOTE

Each camshaft journal holder (1) is identified with a cast-on letters.

4) Tighten the camshaft journal holder bolts to the specified torque.

Tightening torque
Camshaft journal holder bolt (a): 10 N·m (1.0 kgf-m, 7.5 lbf-ft)

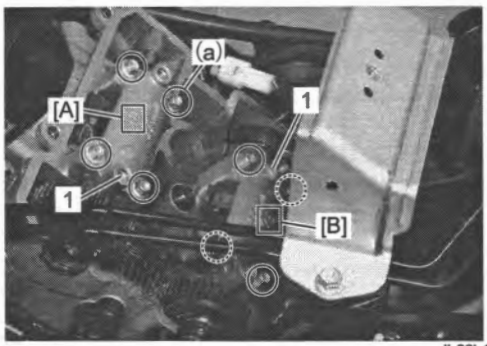

IL06L1140045-01

[A]: INR	[B]: EXR

5) Recheck the rear cylinder camshaft positions, intake and exhaust.

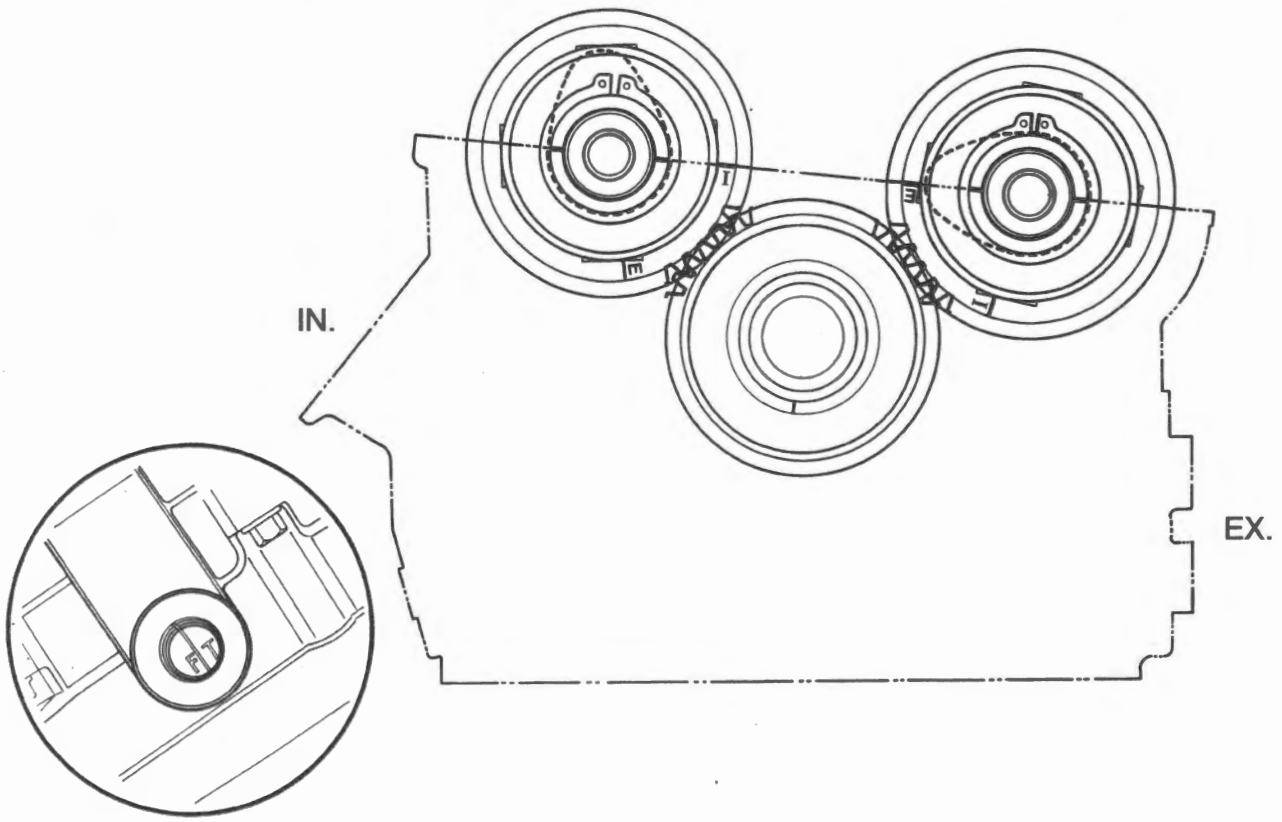

IE31J1140042-01

6) After installing the rear cylinder camshafts, rotate the crankshaft 360 degrees (1 turn), and recheck the positions of the camshafts.

NOTICE

Be sure to check the positions of the "F | T" line (1) on the generator rotor, engraved lines (2) on each cam drive idle gear/sprocket No. 2 and the engraved lines (3) on the camshafts.

Front cylinder TDC of compression stroke

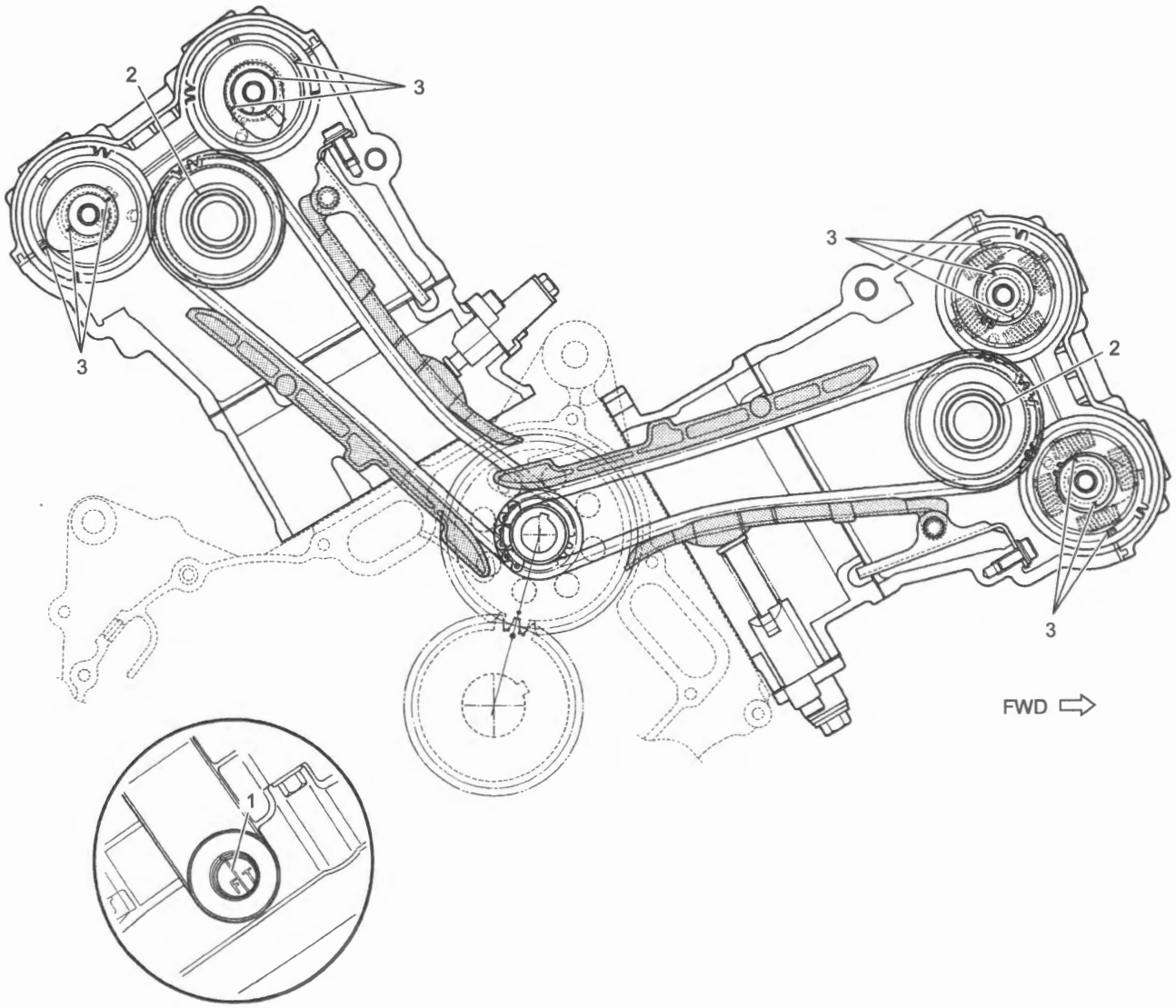

IE31J1140043-01

7) Check and adjust the valve clearance. ☞(Page 0B-5)
8) Apply engine oil to the new O-ring (1), and then install the new O-ring to the generator cover plug.
9) Install the new gasket (2) to the valve timing inspection plug.
10) Tighten the generator cover plug (3) and valve timing inspection plug (4) to the specified torque.

Tightening torque
Generator cover plug (a): 15 N·m (1.5 kgf-m, 11.0 lbf-ft)
Valve timing inspection plug (b): 20 N·m (2.0 kgf-m, 15.0 lbf-ft)

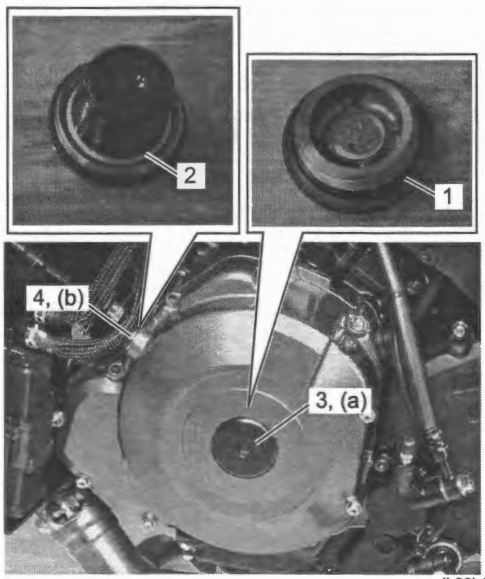

IL06L1140112-01

11) Install the EVAP canister (1), and then tighten the EVAP canister bracket bolt (2) to specified torque.

Tightening torque
EVAP canister bracket bolt (a): 10 N·m (1.0 kgf-m, 7.5 lbf-ft)

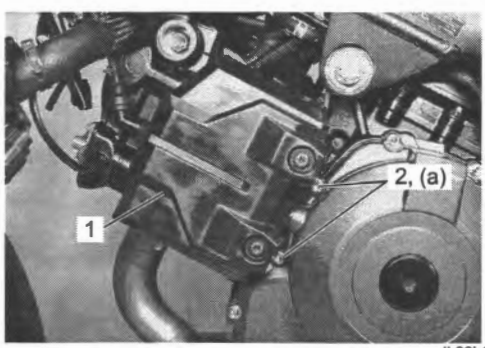

IL06L1140113-01

Camshaft Inspection

BENL06L21406013

Refer to "Camshaft Removal" (Page 1D-13) and "Camshaft Installation" (Page 1D-15).

Camshaft Identification

The camshafts can be identified by the embossed letter.

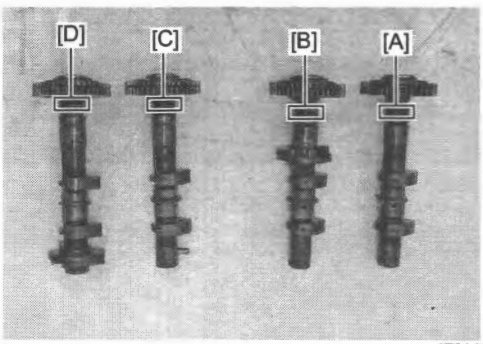

IE31J1140045-01

[A]:	INF (Front cylinder intake camshaft)
[B]:	EXF (Front cylinder exhaust camshaft)
[C]:	INR (Rear cylinder intake camshaft)
[D]:	EXR (Rear cylinder exhaust camshaft)

Cam Wear

Check the camshaft for wear or damage.
Measure the cam height "a" with a micrometer.
Replace a camshaft if the cams are worn to the service limit.

Special tool
09900–20202

Cam height
Intake [Limit]: 36.28 mm (1.428 in)
Exhaust [Limit]: 35.58 mm (1.400 in)

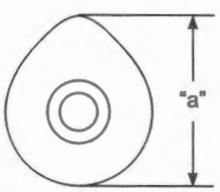

I649G1140199-03

Camshaft Journal Wear

Refer to "Cam Chain Tension Adjuster / Cam Chain Tensioner / Cylinder Head Assembly / Cam Chain Guide / Cylinder Removal" (Page 1D-32) and "Cam Chain Tension Adjuster / Cam Chain Tensioner / Cylinder Head Assembly / Cam Chain Guide / Cylinder Installation" (Page 1D-36).

1) Determine whether or not each journal is worn down to the limit by measuring the oil clearance with the camshaft installed in place.

2) Measure the clearance at the widest portion with the special tool.

Special tool
(A): 09900–22301
(B): 09900–22302

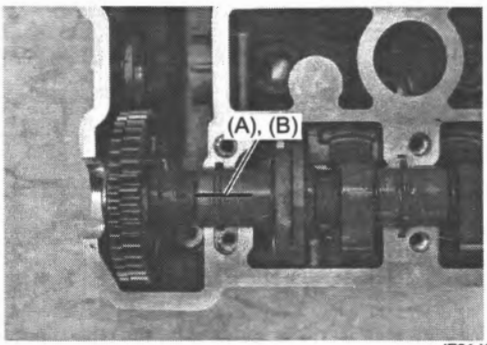

IE31J1140046-01

3) Install camshaft journal holder and tighten the camshaft journal holder bolts evenly and diagonally to the specified torque. ☞(Page 1D-15)

NOTE

Do not rotate the camshaft with the plastigage in place.

4) Remove the camshaft journal holder and measure the width of the compressed plastigage using the envelope scale.
5) This measurement should be taken at the widest part of the compressed plastigage.

Camshaft journal oil clearance
Intake [Limit]: 0.150 mm (0.0059 in)
Exhaust [Limit]: 0.150 mm (0.0059 in)

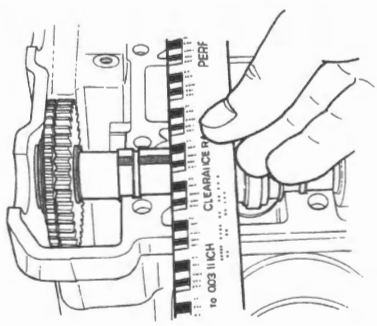

IE31J1140047-01

6) If the camshaft journal oil clearance exceeds the limit, measure the inside diameter of the camshaft journal holder and the outside diameter of the camshaft journal. Replace the camshaft or the cylinder head depending upon which one exceeds the specification.

Special tool
(A): 09900–20602
(B): 09900–22403
(C): 09912–66310

Camshaft journal holder I.D.
Intake [Standard]: 22.012 – 22.025 mm (0.8666 – 0.8671 in)
Exhaust [Standard]: 22.012 – 22.025 mm (0.8666 – 0.8671 in)

Camshaft journal O.D.
Intake [Standard]: 21.972 – 21.993 mm (0.8650 – 0.8659 in)
Exhaust [Standard]: 21.972 – 21.993 mm (0.8650 – 0.8659 in)

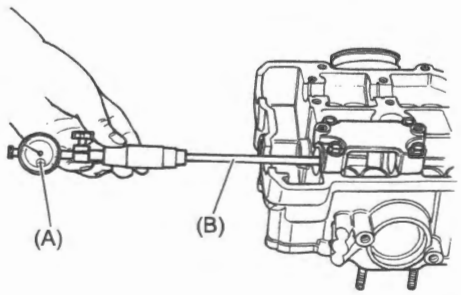

IE31J1140048-01

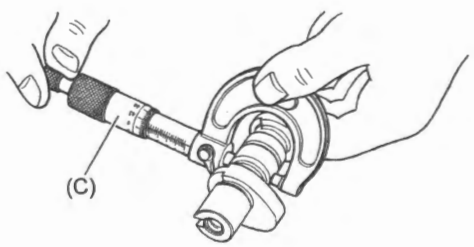

IE31J1140049-01

Camshaft Runout
Measure the runout using the dial gauge. Replace the camshaft if the runout exceeds the limit.

Special tool
(A): 09900–20607
(B): 09900–20701
(C): 09900–21304

Camshaft runout
Intake & Exhaust [Limit]: 0.10 mm (0.004 in)

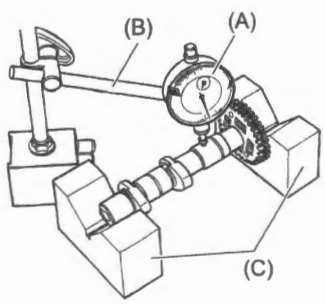

IE31J1140050-02

Camshaft Sprocket
Inspect the teeth of each camshaft sprocket for wear or damage.
If they are worn or damaged, replace the camshaft assembly and cam chain as a set.

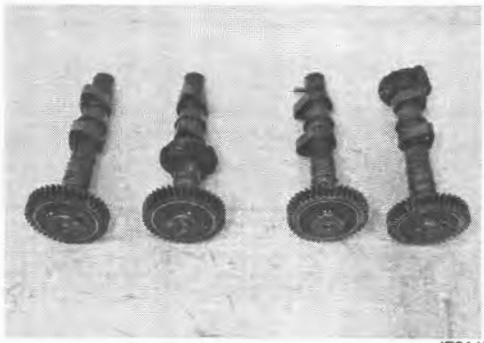
IE31J1140051-01

Automatic Decompression

NOTICE

Do not attempt to disassemble the automatic-decomp. assembly. They are unserviceable.

Inspect the automatic-decomp. for damage and smooth operation.
If any defects are found, replace the camshaft assembly.

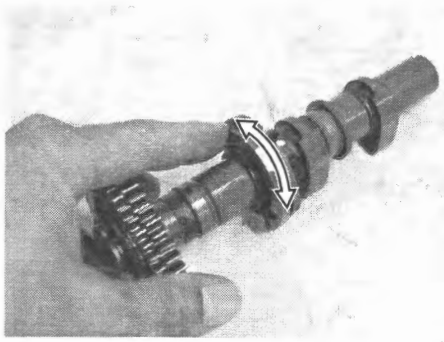
IE31J1140052-02

Valve Clearance Inspection and Adjustment

BENL06L21406014

Refer to "Valve Clearance" in Section 0B (Page 0B-5).

Engine Assembly Removal

BENL06L21406015

1) Remove the following parts. (If equipped)
   - Accessory bar: ☞(Page 9E-7)
   - Under cover: ☞(Page 9E-6)
2) Drain engine oil. ☞(Page 0B-14)
3) Drain engine coolant. ☞(Page 0B-16)
4) Disconnect the battery (–) lead wire. ☞(Page 1J-10)
5) Remove the throttle body. ☞(Page 1D-7)
6) Remove the radiator with the cooling fan motor. ☞(Page 1F-8)
7) Remove the radiator reservoir tank. ☞(Page 1F-10)
8) Remove the radiator hoses (1) and PCV hose (2).

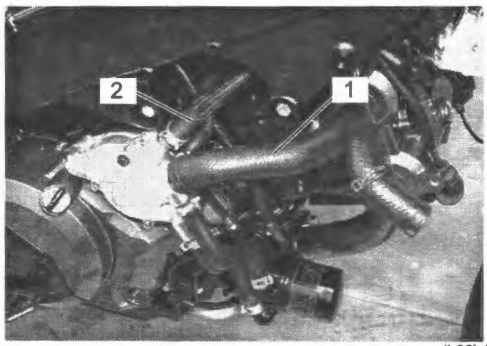

IL06L1140047-01

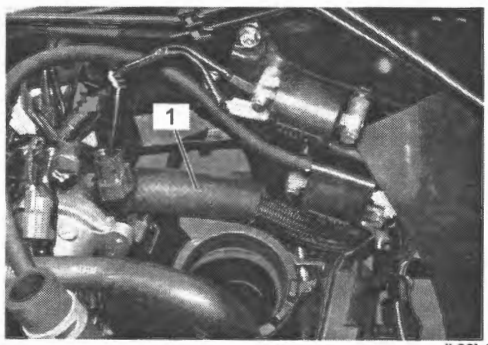

IL06L1140114-01

9) Remove the PAIR reed valves. ☞(Page 1B-3)
10) Remove the PAIR control solenoid valve. ☞(Page 1B-5)
11) Remove the EVAP canister. ☞(Page 1B-6)
12) Remove the all spark plug caps. ☞(Page 0B-8)
13) Disconnect the ECT sensor coupler (1), generator lead wire coupler (2) and CKP sensor coupler (3).

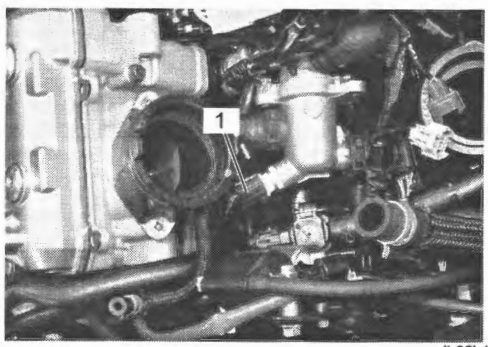

IL06L1140049-01

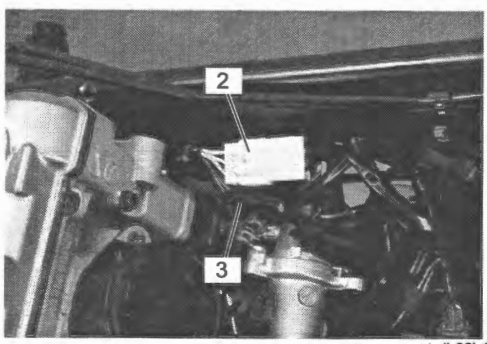

IL06L1140050-01

14) Disconnect the GP switch coupler (1).



IL06L1140051-01

15) Disconnect the engine ground coupler (1) and remove the clamps (2).

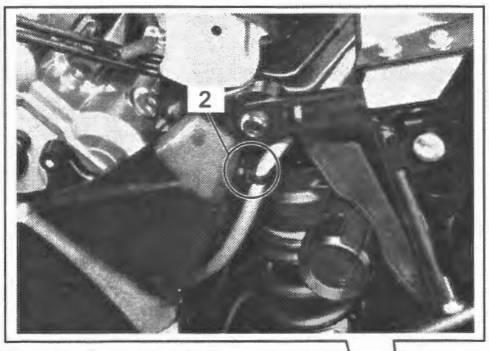

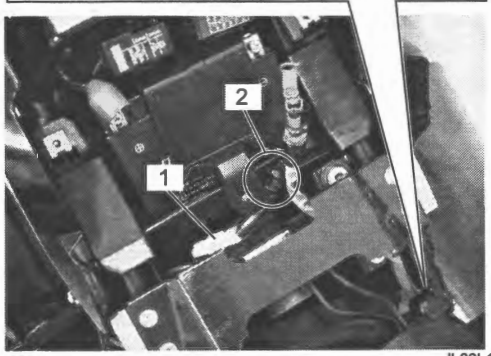

IL06L1140052-01

16) Disconnect the starter motor lead wire (1) and oil pressure switch lead wire (2).

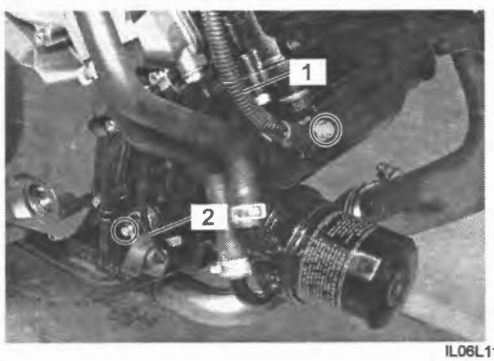

IL06L1140053-01

17) Remove the gearshift link arm (1).

NOTE

Mark the gearshift shaft head at which the gearshift link arm slit is set for correct reinstallation.



IL06L1140054-01

18) Remove the engine sprocket. ☞(Page 3A-2)
19) Disconnect the clutch hose. ☞(Page 5C-11)
20) Remove the muffler and exhaust pipes. ☞(Page 1K-3)
21) Remove the front footrest bracket bolt (1) and rear brake light switch spring (2).
22) Remove the right pivot cover (3).

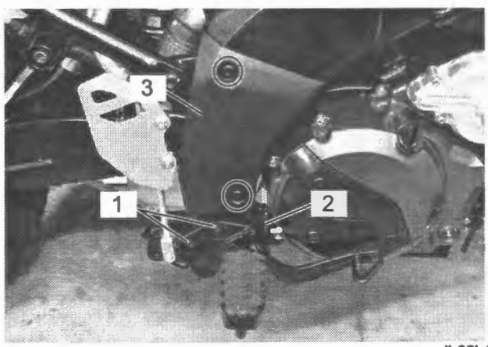

IL06L1140055-01

23) Remove the side-stand switch (1).

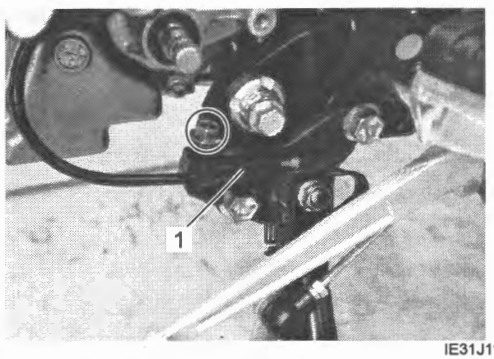

IE31J1140069-01

24) Support the motorcycle with a jock or wooden block securely.

25) Support the engine with a proper jack (1).

NOTICE

Do not support at the oil filter (2).

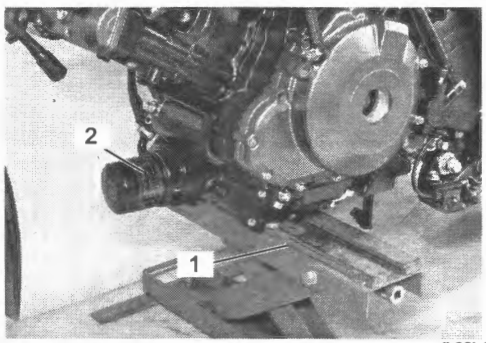

IL06L1140056-01

26) Remove the engine mounting nut cover (1) (if equipped).

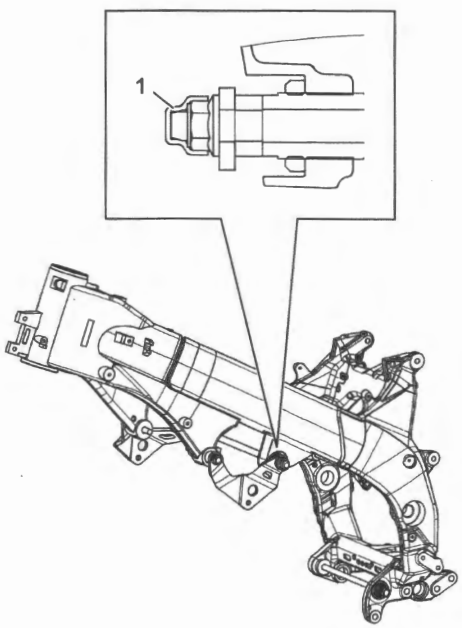

IL06L1140129-01

27) Remove the engine mounting nut (M12) (1), bolt (M12) (L300) (2).

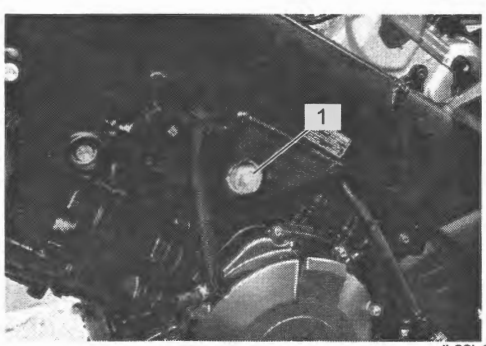

IL06L1140057-01

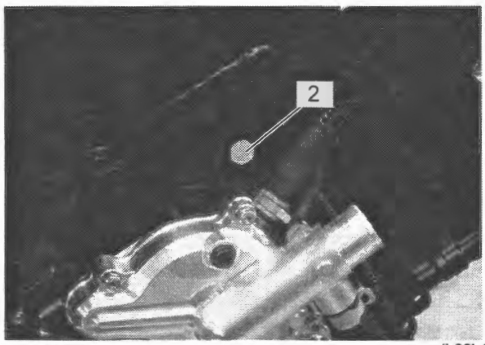

IL06L1140058-01

28) Loosen the engine mounting thrust adjuster lock-nut (1) with the special tool.

Special tool
(A): 09940–14990

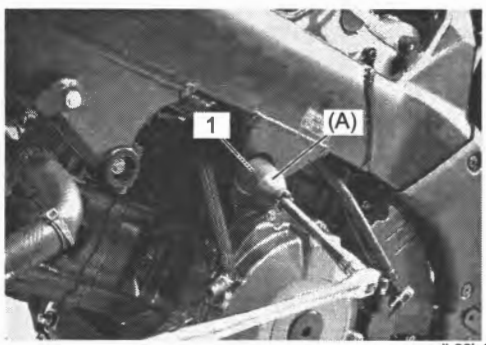

IL06L1140059-01

29) Loosen the engine mounting thrust adjuster (1).

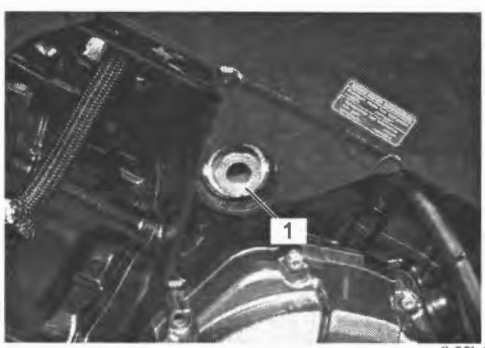

IL06L1140060-01

30) Loosen the pinch bolt (1) and remove the engine mounting bolt (M10) (L70) (2), spacer (3) and accessory bar bracket (if equipped).

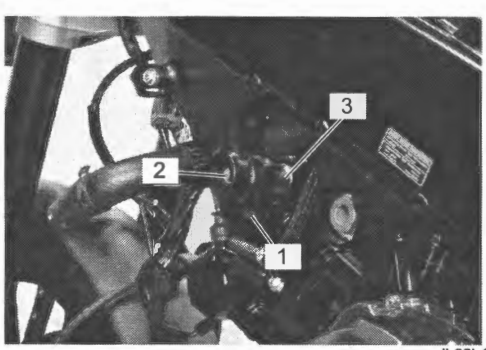

IL06L1140061-01

31) Remove the engine mounting bolt (M10) (L50) (1).

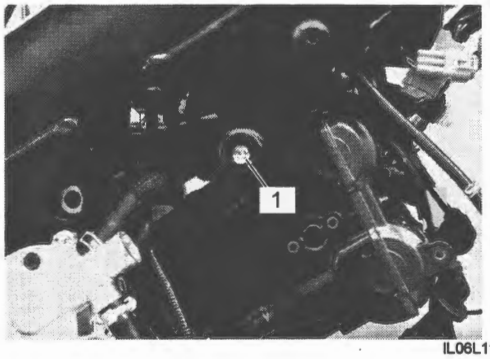

IL06L1140062-01

32) Remove the engine mounting nut (M10) (1) and bolt (M10) (L265) (2).

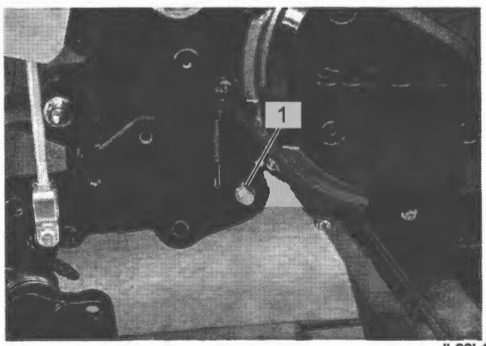

IL06L1140063-01

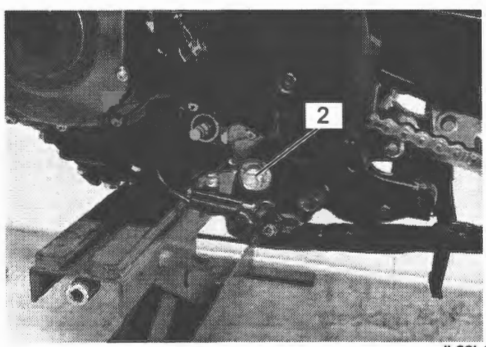

IL06L1140064-01

33) Loosen the engine mounting thrust adjuster lock-nut (1) with the special tool.

Special tool
(A): 09940–14980

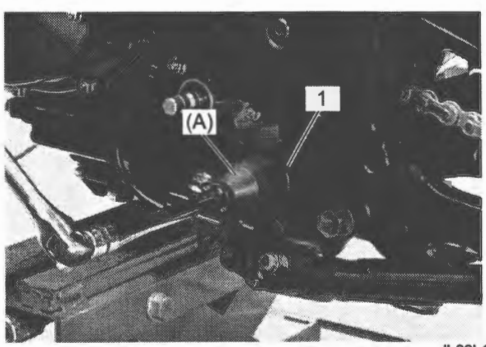

IL06L1140065-01

34) Loosen the engine mounting thrust adjuster (1).

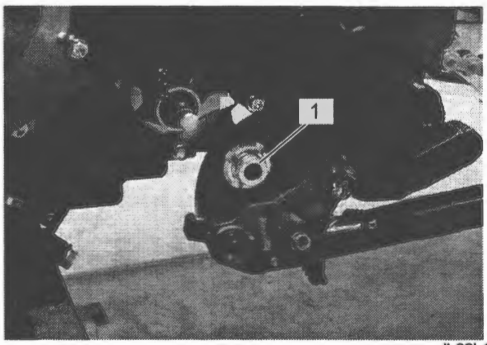

IL06L1140066-01

35) Loosen the pinch bolt (1).

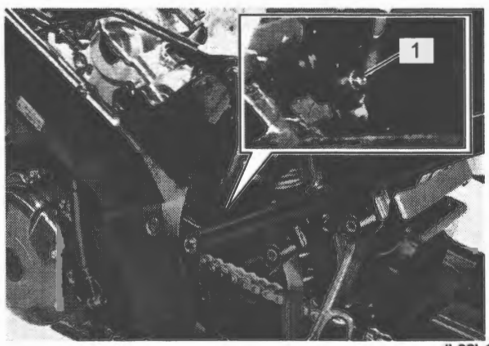

IL06L1140067-01

36) Remove engine mounting bolt (M10) (L225) (1) and gradually lower the engine. Then, remove the engine assembly (2) from the frame.

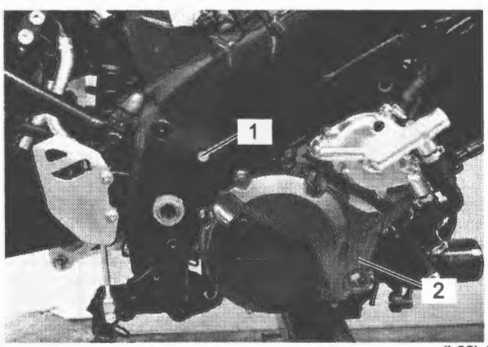

IL06L1140068-01

Engine Assembly Installation

BENL06L21406016

Reinstall the engine in the reverse order of engine removal. Pay attention to the following points:

- Mount the engine assembly in the following procedures:

NOTICE

Be careful not to catch the wiring harness and hoses between the frame and the engine.

a. Fit the collar (1) onto the crankcase as shown.

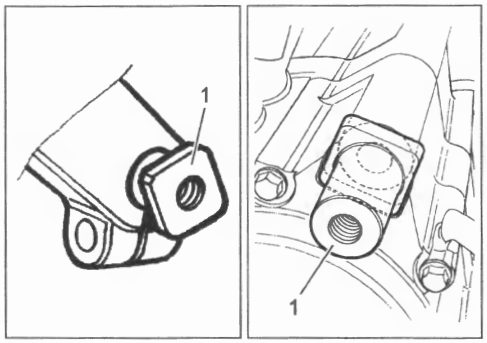

IE31J1140081-01

b. Install the spacer (1).

c. Temporarily tighten the engine mounting bolts (2) and new nuts (3).

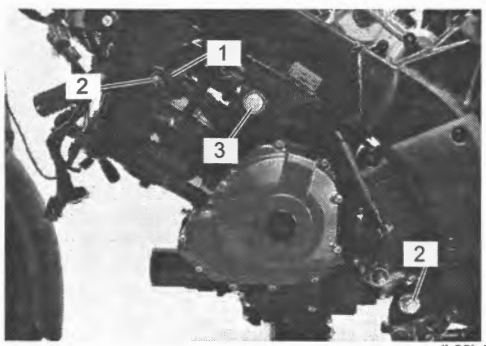

IL06L1140069-01

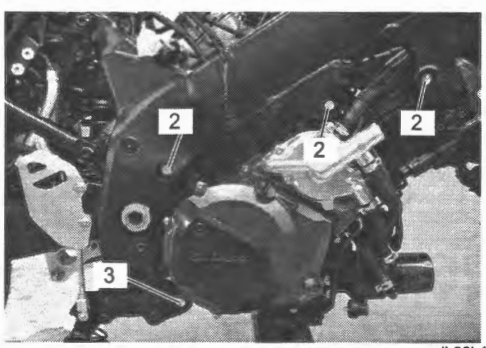

IL06L1140070-01

d. Tighten the engine mounting thrust adjusters (1) to the specified torque.

Tightening torque
Engine mounting thrust adjuster (a): 12 N·m (1.2 kgf-m, 9.0 lbf-ft)

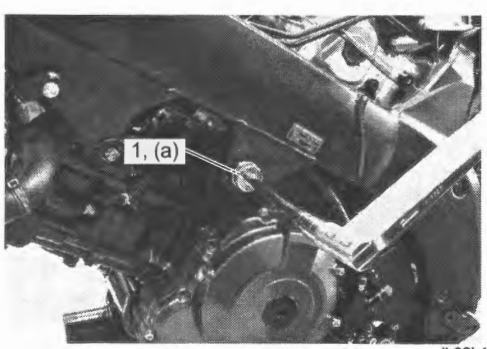

IL06L1140073-01

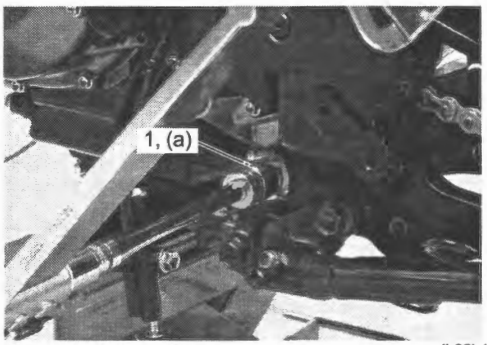

IL06L1140074-01

e. Tighten the engine mounting thrust adjuster lock-nuts (1) to the specified torque with the special tools.

Special tool
(A): 09940–14990
(B): 09940–14980

Tightening torque
Engine mounting thrust adjuster lock-nut (a): 45 N·m (4.6 kgf-m, 33.5 lbf-ft)

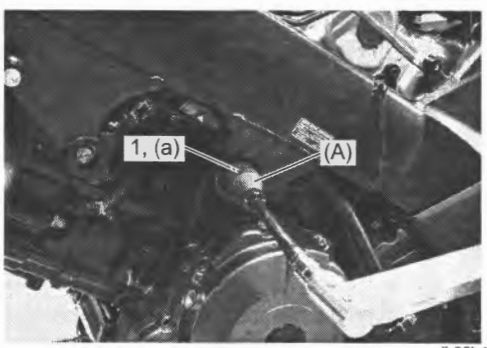

IL06L1140075-01

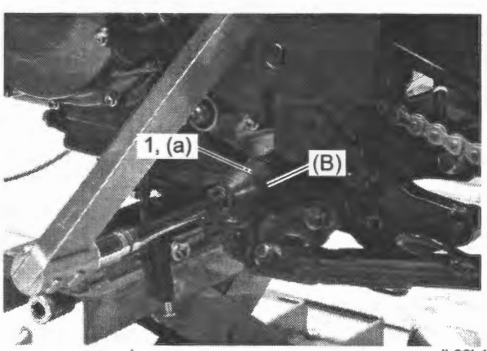

IL06L1140076-02

f. Tighten the each bolts and nuts in numerical order ("1" – "5") to specified torque.

DL1050RQ

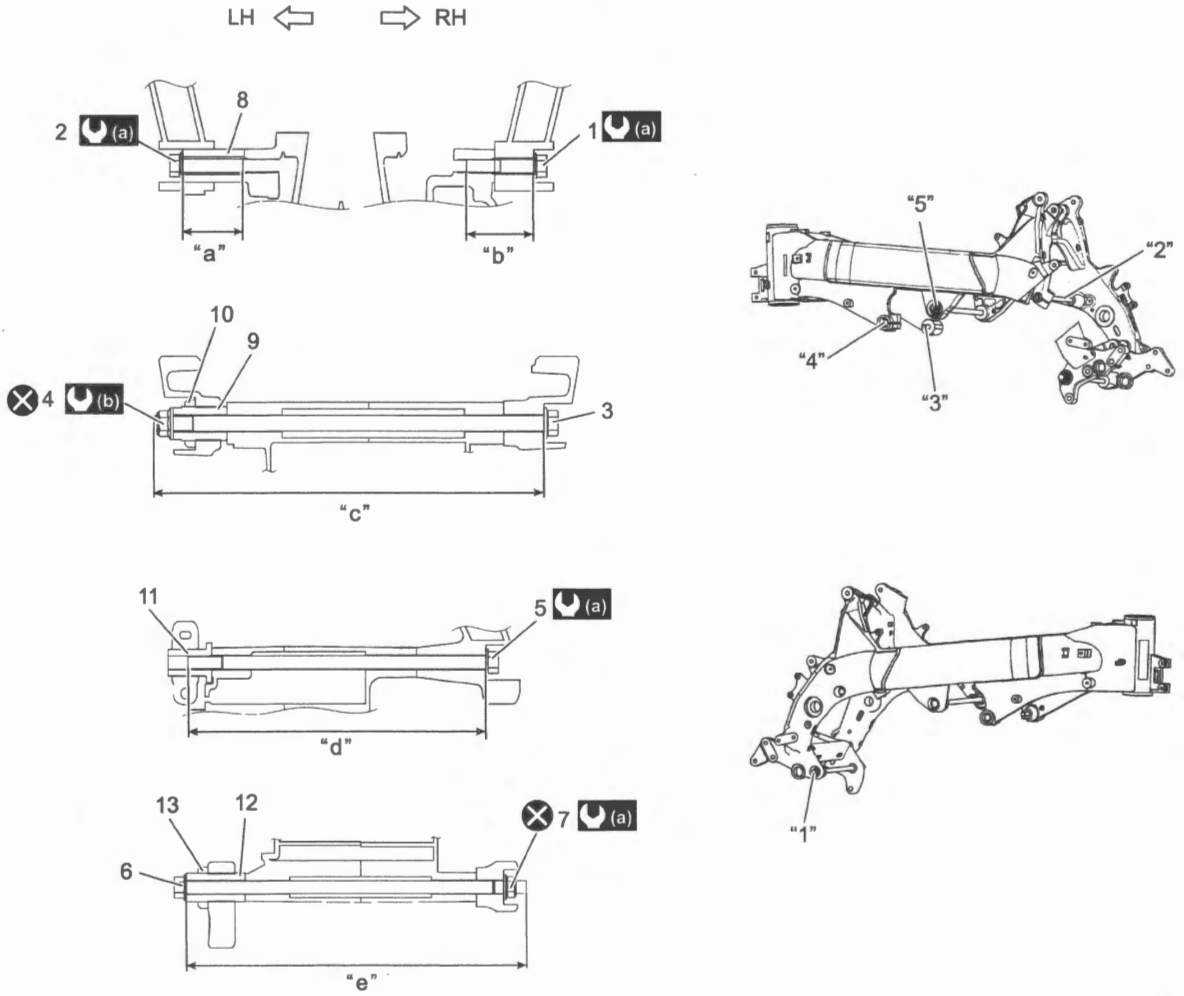

IL06L1140115-03

1. Engine mounting bolt (Front upper, Right)	8. Spacer	"b": 50 mm (2.0 in)
2. Engine mounting bolt (Front upper, Left)	9. Engine mounting thrust adjuster (Center)	"c": 300 mm (11.8 in)
3. Engine mounting bolt (Center upper)	10. Engine mounting thrust adjuster lock-nut (Center)	"d": 225 mm (8.9 in)
4. Engine mounting nut (Center upper)	11. Collar	"e": 265 mm (10.4 in)
5. Engine mounting bolt (Rear upper)	12. Engine mounting thrust adjuster (Lower)	(a) : 55 N·m (5.6 kgf-m, 40.5 lbf-ft)
6. Engine mounting bolt (Rear lower)	13. Engine mounting thrust adjuster lock-nut (Lower)	(b) : 93 N·m (9.5 kgf-m, 68.5 lbf-ft)
7. Engine mounting nut (Rear lower)	"a": 70 mm (2.8 in)	

DL1050RC

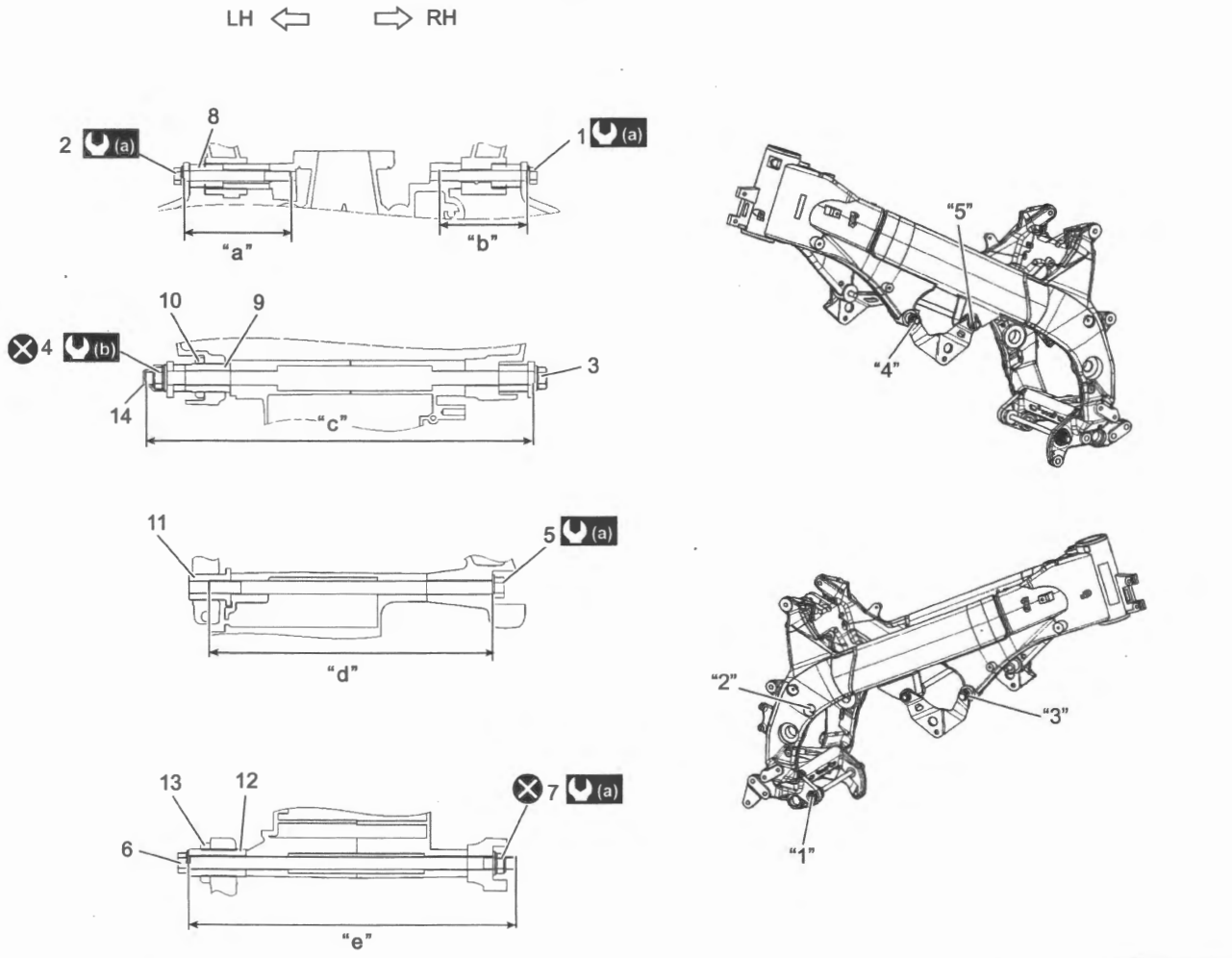

IL06L1140130-01

1. Engine mounting bolt (Front upper, Right)	8. Spacer	"a": 105 mm (4.1 in)
2. Engine mounting bolt (Front upper, Left)	9. Engine mounting thrust adjuster (Center)	"b": 85 mm (3.3 in)
3. Engine mounting bolt (Center upper)	10. Engine mounting thrust adjuster lock-nut (Center)	"c": 353 mm (13.9 in)
4. Engine mounting nut (Center upper)	11. Collar	"d": 225 mm (8.9 in)
5. Engine mounting bolt (Rear upper)	12. Engine mounting thrust adjuster (Lower)	"e": 265 mm (10.4 in)
6. Engine mounting bolt (Rear lower)	13. Engine mounting thrust adjuster lock-nut (Lower)	(a) : 55 N·m (5.6 kgf-m, 40.5 lbf-ft)
7. Engine mounting nut (Rear lower)	14. Engine mounting nut cover	(b) : 93 N·m (9.5 kgf-m, 68.5 lbf-ft)

g. Tighten the pinch bolts (1) to the specified torque.

Tightening torque
Engine mounting pinch bolt (a): 23 N·m (2.3 kgf-m, 17.0 lbf-ft)



IL06L1140078-01

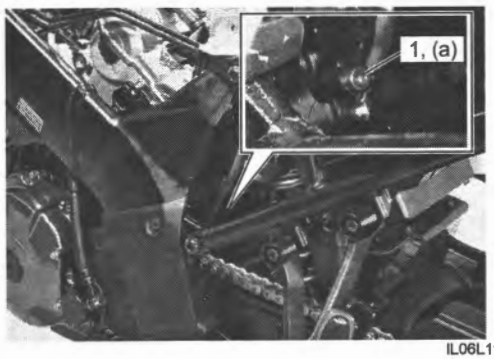

IL06L1140079-01

- When installing the side-stand switch (1), insert the projection (2) of side-stand switch (1) into the hole (3) of side-stand bracket.
- Apply thread lock to the side-stand bolt (4) and tighten it.

"A": Thread lock cement 99000–32150 (THREAD LOCK CEMENT 1322D)

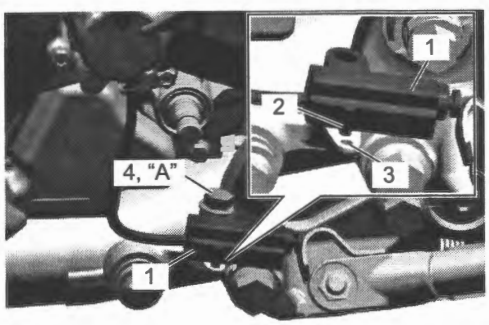

IL06L1140116-01

- Tighten the front footrest bracket bolts (1) to the specified torque.

Tightening torque
Front footrest bracket bolt (a): 26 N·m (2.7 kgf-m, 19.5 lbf-ft)

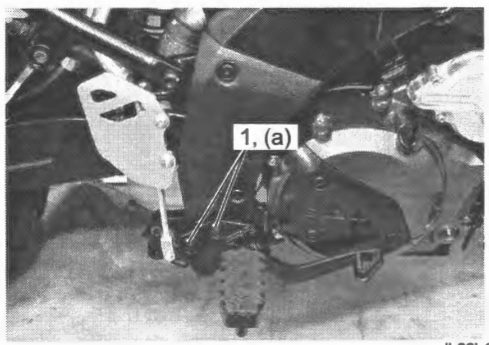

IL06L1140080-01

- Adjust the drive chain slack. ☞(Page 3A-2)
- Check the gearshift lever height. ☞(Page 5B-13)
- Check the radiator hose routing. ☞(Page 1F-3)
- Check the EVAP canister hoses routing. ☞(Page 1B-2)
- Check the wiring harness routing. ☞(Page 9A-23)
- After finishing the engine installation, check the following items.
  - Engine oil leakage: ☞(Page 0B-14)
  - Engine coolant leakage: ☞(Page 0B-16)

Cam Chain Tension Adjuster / Cam Chain Tensioner / Cylinder Head Assembly / Cam Chain Guide / Cylinder Components

BENL06L21406017

Front Cylinder

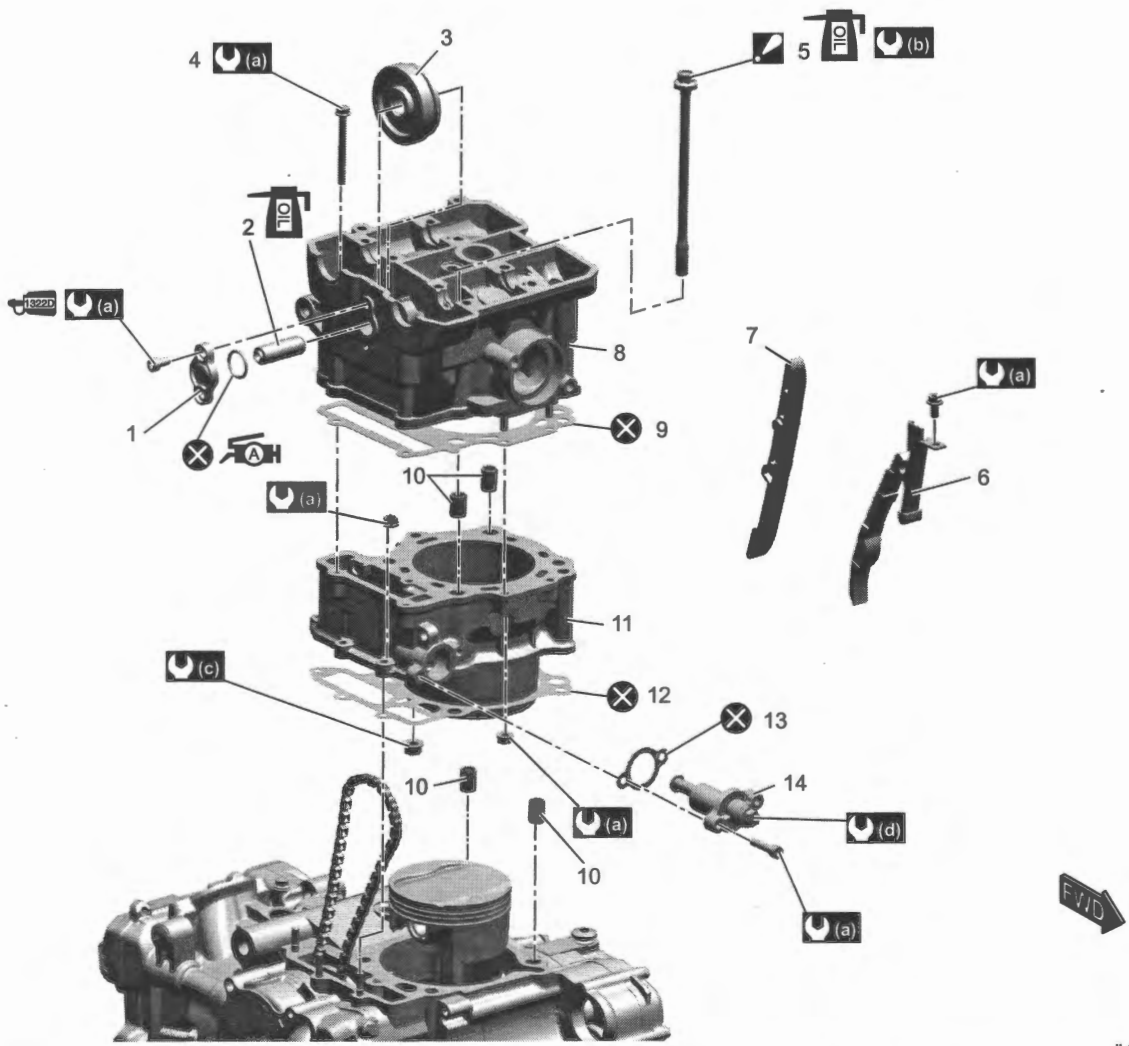

IL06L1140117-01

1. Cylinder head cover No. 2	9. Cylinder head gasket	(c) : 25 N·m (2.5 kgf-m, 18.5 lbf-ft)
2. Idle shaft No. 2	10. Dowel pin	(d) : 23 N·m (2.3 kgf-m, 17.0 lbf-ft)
3. Drive idle gear/sprocket No. 2	11. Cylinder	OIL : Apply engine oil.
4. Cylinder head bolt (M6)	12. Cylinder gasket	A : Apply SUZUKI SUPER GREASE A.
5. Cylinder head bolt (M10) : For tightening order, refer to "Cam Chain Tension Adjuster / Cam Chain Tensioner / Cylinder Head Assembly / Cam Chain Guide / Cylinder Installation" (Page 1D-36).	13. Cam chain tensioner adjuster gasket	1322D : Apply THREAD LOCK CEMENT
6. Cam chain tensioner	14. Cam chain tensioner adjuster	: Do not reuse.
7. Cam chain guide	(a) : 10 N·m (1.0 kgf-m, 7.5 lbf-ft)	
8. Cylinder head	(b) : 25 → 46 N·m (2.5 → 4.7 kgf-m, 18.5 → 34.0 lbf-ft)	

Rear Cylinder

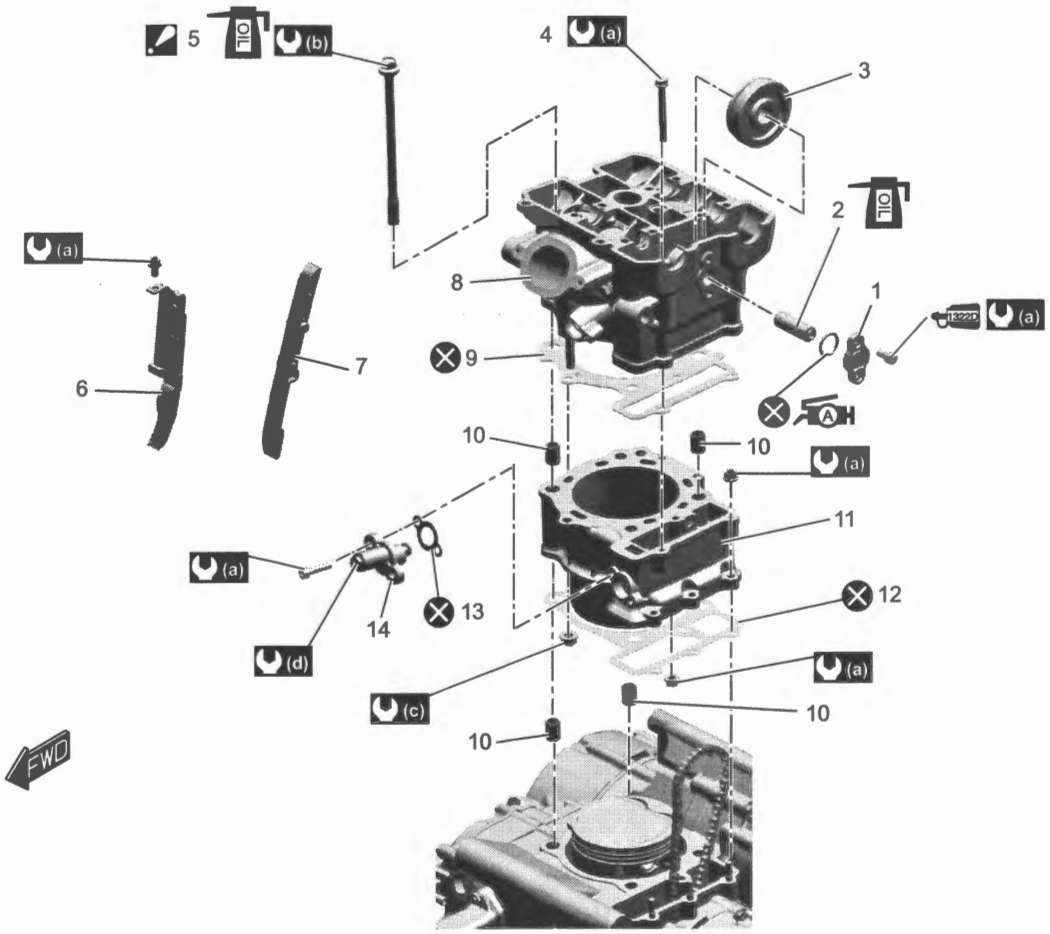

IL08L1140118-01

1. Cylinder head cover No. 2	8. Cylinder head	(b) : 25 → 46 N·m (2.5 → 4.7 kgf-m,18.5 → 34.0 lbf-ft)
2. Idle shaft No. 2	9. Cylinder head gasket	(c) : 25 N·m (2.5 kgf-m, 18.5 lbf-ft)
3. Drive idle gear/sprocket No. 2	10. Dowel pin	(d) : 7.0 N·m (0.71 kgf-m, 5.20 lbf-ft)
4. Cylinder head bolt (M6)	11. Cylinder	: Apply engine oil.
5. Cylinder head bolt (M10) : For tightening order, refer to "Cam Chain Tension Adjuster / Cam Chain Tensioner / Cylinder Head Assembly / Cam Chain Guide / Cylinder Installation" (Page 1D-36).	12. Cylinder gasket	A : Apply SUZUKI SUPER GREASE A.
6. Cam chain tensioner	13. Cam chain tensioner adjuster gasket	1322D : Apply THREAD LOCK CEMENT
7. Cam chain guide	(a) : 10 N·m (1.0 kgf-m, 7.5 lbf-ft)	: Do not reuse.

Cam Chain Tension Adjuster / Cam Chain Tensioner / Cylinder Head Assembly / Cam Chain Guide / Cylinder Removal

BENL06L21406018

Refer to "Engine Assembly Removal" (Page 1D-22) and "Camshaft Removal" (Page 1D-13).

Front Cylinder Cam Chain Tension Adjuster

1) Turn the crankshaft to bring the "F | T" line (1) on generator rotor to the index mark (2) of the valve inspection hole and also to bring the cam drive idle gear/sprocket No. 2 (Front cylinder) (3) to the position as shown.

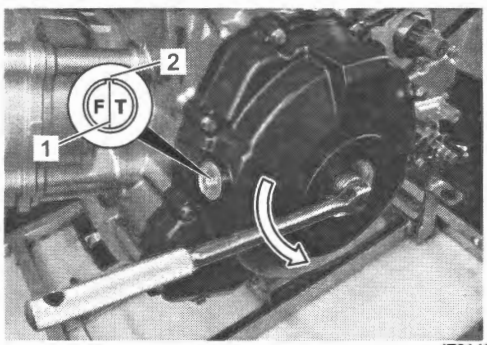

IE31J1140091-01

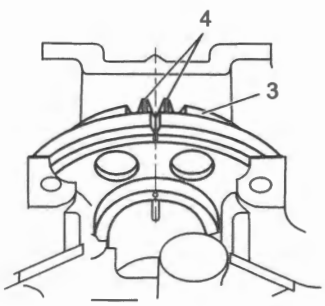

IL06L1140120-01

4. Paint

2) Remove the cam chain tension adjuster cap bolt (1), spring and cam chain tension adjuster (2).

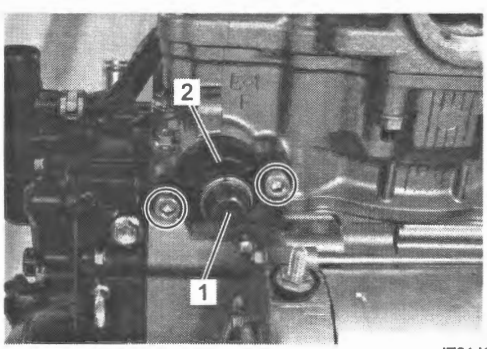

IE31J1140093-01

Front Cylinder Head Assembly

1) Disconnect the water hoses (1) and remove the thermostat connector assembly (2).

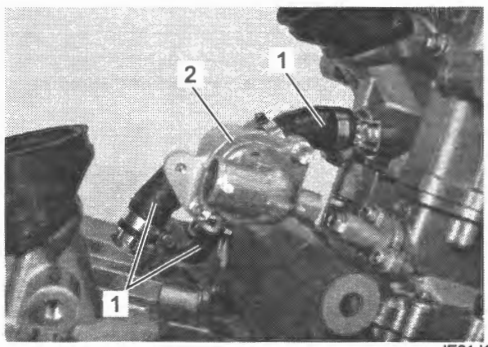

IE31J1140294-01

2) Remove the cylinder head cover No. 2 (1).

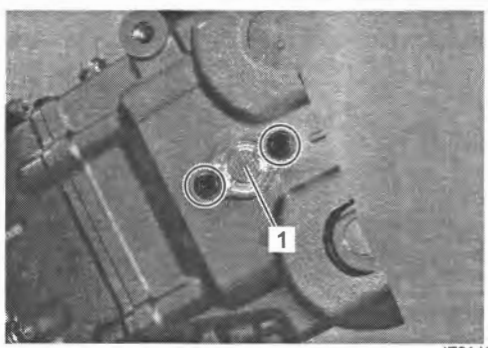

IE31J1140097-01

3) Pull out the idle shaft No. 2 (1) and remove the cam drive idle gear/sprocket No. 2 (2).

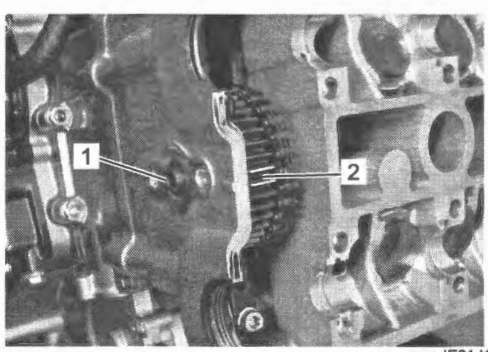

IE31J1140098-02

4) Remove the cam chain tensioner (1).

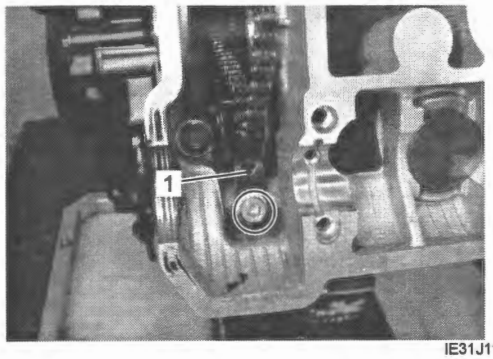

IE31J1140099-01

5) Remove the cylinder head bolts (M6) (1).

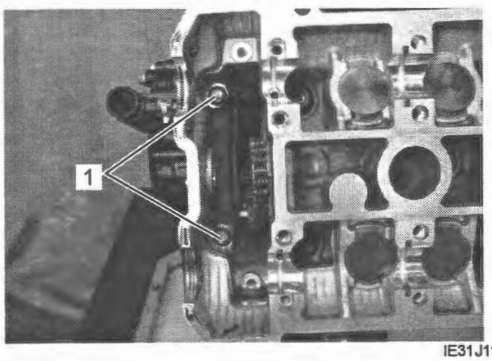

IE31J1140100-01

6) Remove the cylinder head nuts, (M6) (1) and (M8) (2).

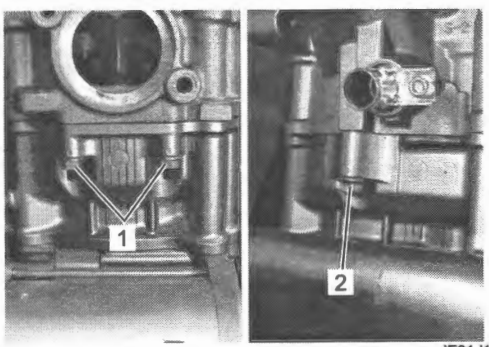

IE31J1140101-01

7) Loosen the cylinder nuts (1).

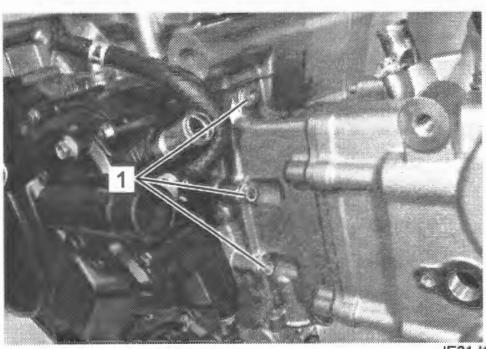

IE31J1140102-01

8) Remove the cylinder head bolts (M10).

NOTE

Loosen the cylinder head bolts little by little diagonally.

9) Remove the cylinder head assembly (1).

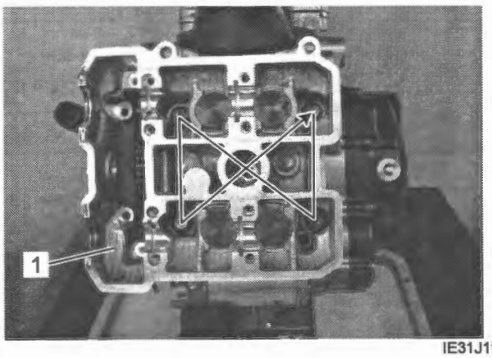

IE31J1140103-01

10) Remove the cylinder head gasket (1) and dowel pins (2).

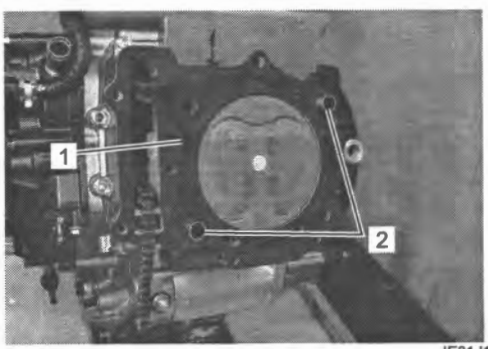

IE31J1140104-02

Front Cylinder Cam Chain Guide

Remove the cam chain guide (1).

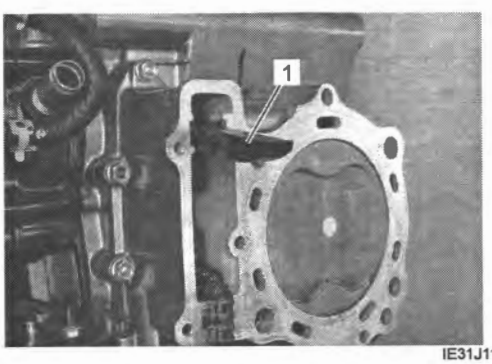

IE31J1140105-01

Front Cylinder

1) Remove the cylinder nuts (1) and cylinder (2).

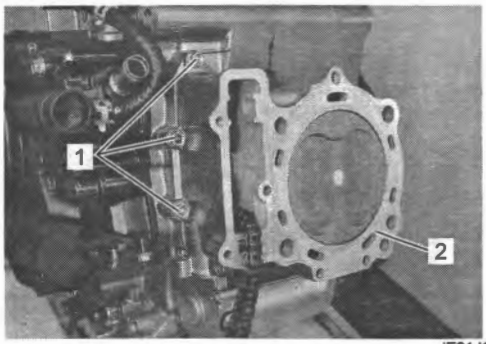

IE31J1140106-01

2) Remove the cylinder gasket (1) and dowel pins (2).

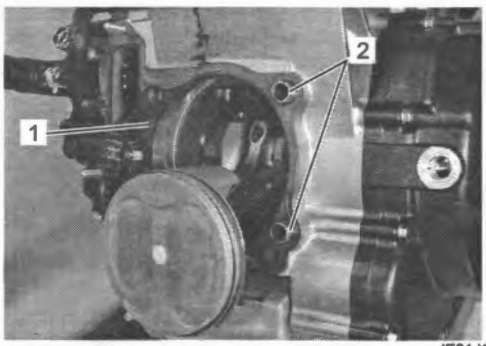

IE31J1140107-01

Rear Cylinder Cam Chain Tension Adjuster

1) For the rear cylinder cam drive idle gear/sprocket No. 2 removal, the crankshaft setting position (1) must be set at the same position (TDC of compression stroke) as the front one.

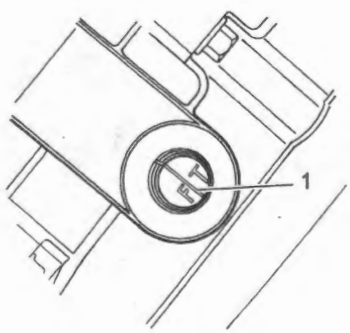

IE31J1140108-01

2) Remove the cam chain tension adjuster cap bolt (1) and spring (2).

⚠ CAUTION

The cam chain tension adjuster cap bolt is spring loaded. Be careful when removing it.

3) Remove the cam chain tension adjuster (3).

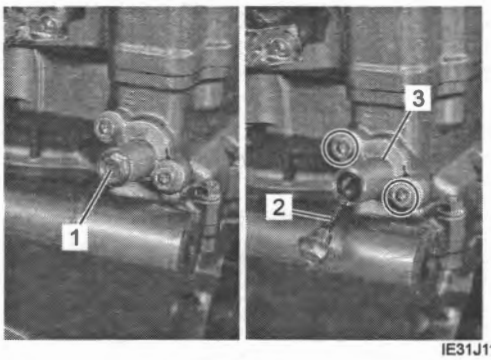

IE31J1140109-01

Rear Cylinder Head Assembly

1) Remove the cylinder head cover No. 2 (1).

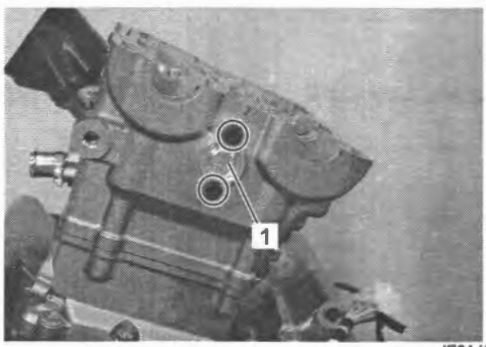

IE31J1140110-01

2) Pull out the idle shaft No. 2 (1) and remove the cam drive idle gear/sprocket No. 2 (2).

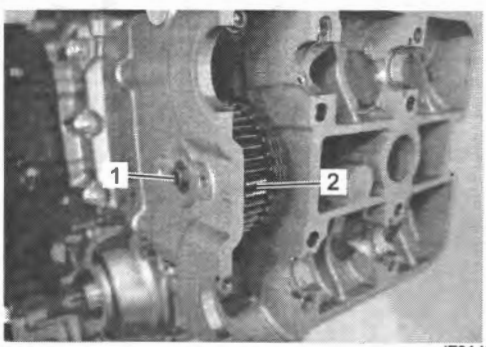

IE31J1140111-02

3) Remove the cam chain tensioner (1).

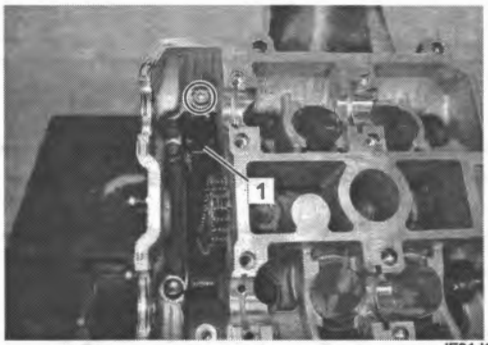

IE31J1140112-01

4) Remove the cylinder head bolts (M6) (1).

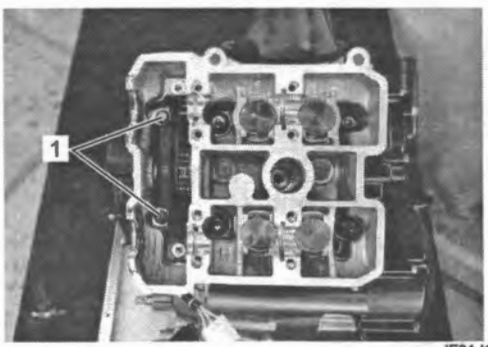

IE31J1140113-01

5) Remove the cylinder head nuts, (M6) (1) and (M8) (2).

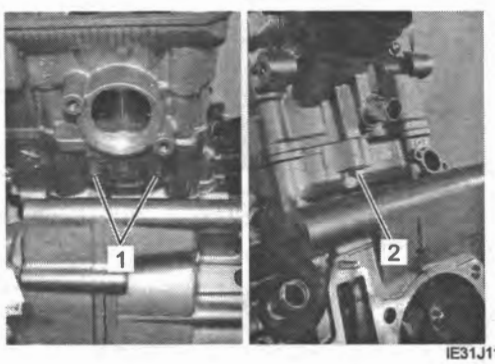

IE31J1140114-01

6) Loosen the cylinder nuts (1).

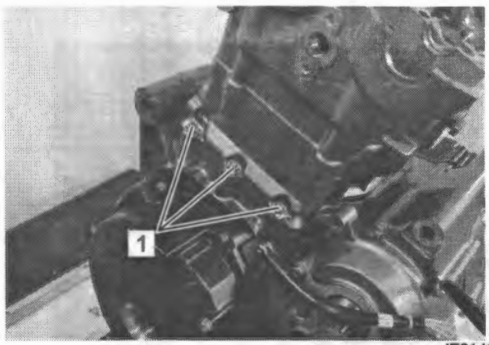

IE31J1140115-01

7) Remove the cylinder head bolts (M10).

NOTE

Loosen the cylinder head bolts little by little diagonally.

8) Remove the cylinder head assembly (1).

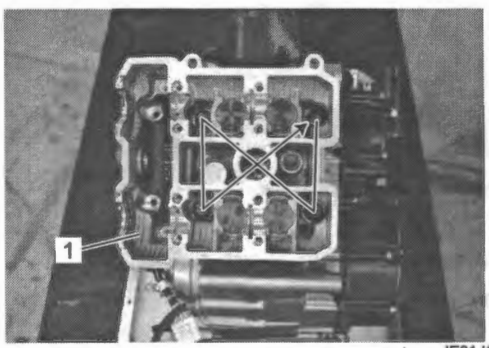

IE31J1140116-02

9) Remove the cylinder head gasket (1) and dowel pins (2).

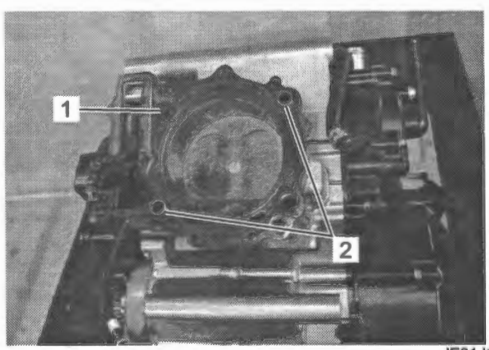

IE31J1140117-01

Rear Cylinder Cam Chain Guide
Remove the cam chain guide (1).

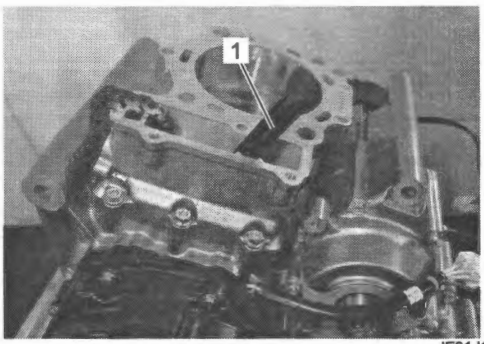

IE31J1140118-01

Rear Cylinder
1) Remove the cylinder nuts (1) and cylinder (2).

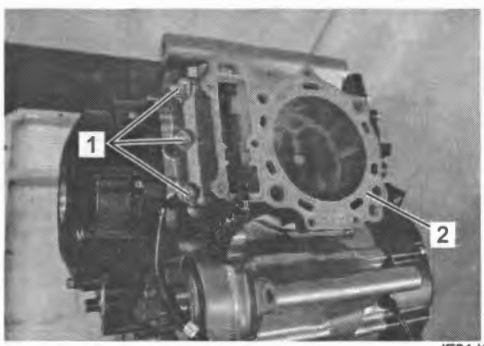

IE31J1140119-01

2) Remove the cylinder gasket (1) and dowel pins (2).

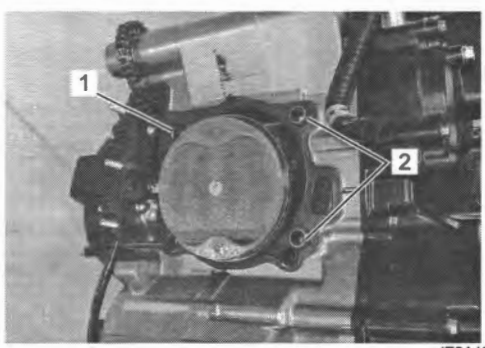

IE31J1140120-01

Cam Chain Tension Adjuster / Cam Chain Tensioner / Cylinder Head Assembly / Cam Chain Guide / Cylinder Installation

BENL06L21406019

Refer to "Camshaft Installation" (Page 1D-15) and "Engine Assembly Installation" (Page 1D-25).

Cylinder
1) Thoroughly wipe off oil from the fitting surface of the crankcase.
2) Apply sealant lightly to the mating surfaces at the parting line between the right and left crankcases as shown.

"A": Sealant 99000–31110 (SUZUKI BOND 1215)

Front cylinder side

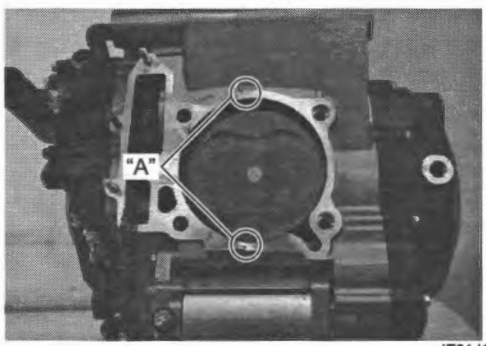

IE31J1140121-01

Rear cylinder side

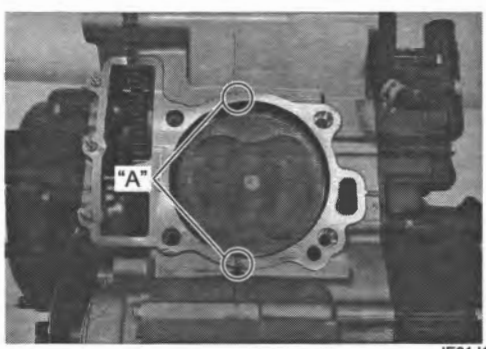

IE31J1140122-01

3) Install the dowel pins (1) and new cylinder gaskets (2).
4) Position the gaps of the three rings and side rails as shown.

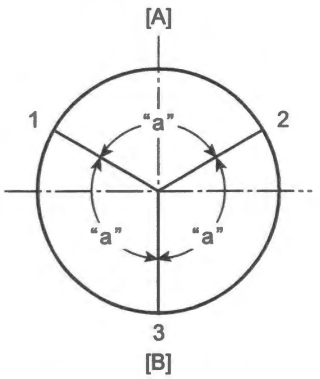

IH18K1140213-01

[A]: EX.
[B]: IN.
1. 2nd ring and lower side rail
2. Upper side rail
3. 1st ring and spacer
"a": 120°

5) Apply molybdenum oil solution to the sliding surface of the pistons and cylinder walls.

NOTE

The cylinders can be identified by the embossed letters.

"A": Assembly lubrication (Molybdenum oil solution)

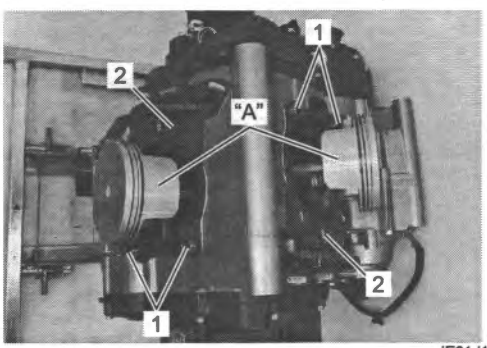

IE31J1140123-01

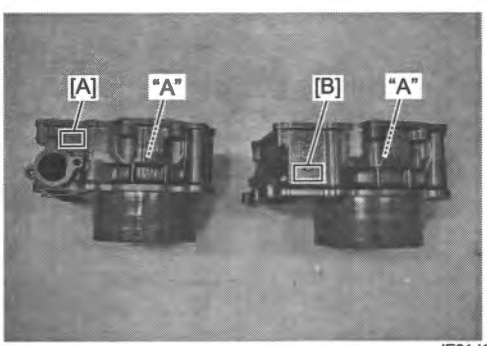

IE31J1140124-01

[A]: 31JF (Front cylinder)	[B]: 31JR (Rear cylinder)

6) Hold the piston rings in proper positions, and insert each piston into the respective cylinders. ☞(Page 1D-58)

NOTE

- **When installing the cylinders, keep the cam chains taut.**
- **When inserting the piston into the cylinder, take care not to bend the piston rings.**

7) Tighten the cylinder nuts (1) temporarily.

Front cylinder

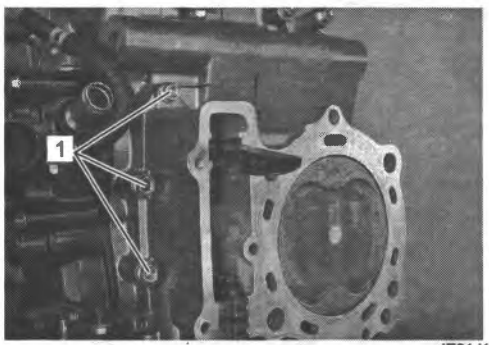

IE31J1140125-01

Rear cylinder

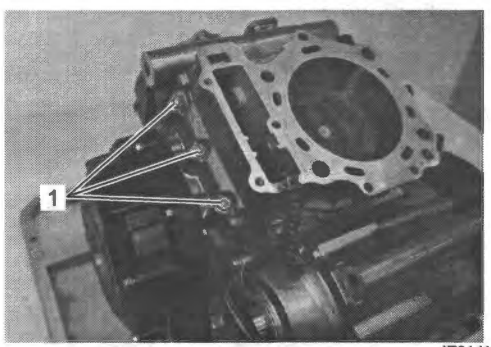

IE31J1140126-01

Cam Chain Guide

Pull the cam chains out of the cylinders and install the cam chain guides (1).

NOTE

There are the guide holders for the bottom ends of each cam chain guide cast in the crankcase. Be sure that the cam chain guides are inserted properly.

Front cylinder

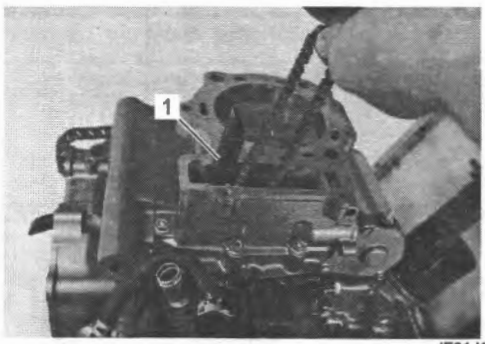

IE31J1140127-01

Rear cylinder

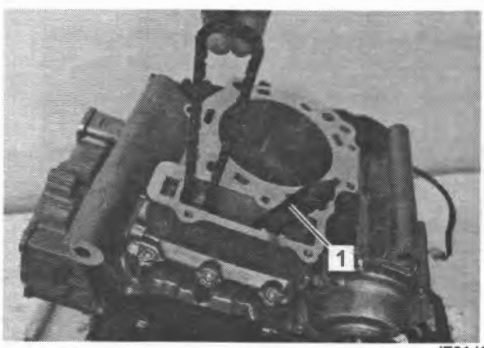

IE31J1140128-01

Cylinder Head Assembly

1) Install the dowel pins (1) and new cylinder head gaskets (2).

Front cylinder

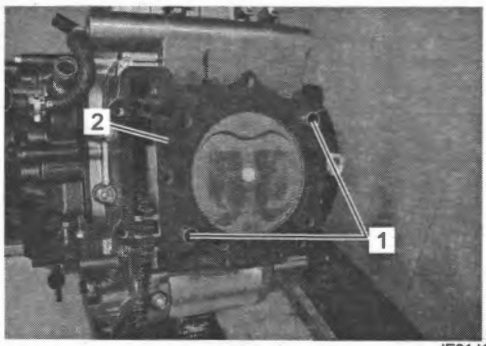

IE31J1140129-01

Rear cylinder

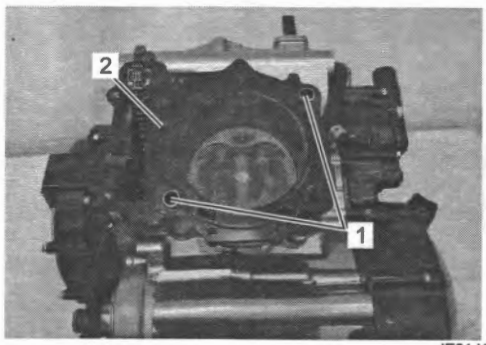

IE31J1140130-01

2) Place each cylinder head assembly on the respective cylinders.

NOTE

When installing the cylinder head assemblies, keep the cam chain taut.

3) Apply engine oil to the both side of the washers "A" and thread portion "B" of the bolts before installing the cylinder head bolts (M10).



IE31J1140131-01

4) Tighten the cylinder head bolts (M10) to the specified two-step torque with a torque wrench sequentially and diagonally.

Tightening torque
Cylinder head bolt (M10): 25 → 46 N·m (2.5 → 4.7 kgf-m, 18.5 → 34.0 lbf-ft)

Front cylinder head

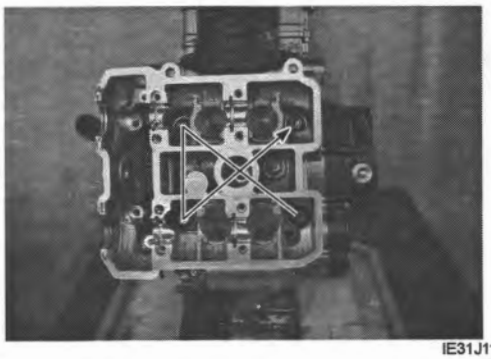

IE31J1140132-01

Rear cylinder head

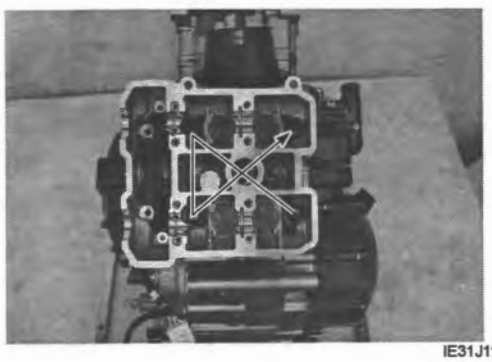

IE31J1140133-01

5) Tighten the cylinder head nuts (M8) (1), (M6) (2), cylinder head bolts (M6) (3) and cylinder nuts (4) to the specified torque.

Tightening torque
Cylinder head nut (M8) (a): 25 N·m (2.5 kgf-m, 18.5 lbf-ft)
Cylinder head nut (M6) (b): 10 N·m (1.0 kgf-m, 7.5 lbf-ft)
Cylinder head bolt (M6) (c): 10 N·m (1.0 kgf-m, 7.5 lbf-ft)
Cylinder nut (d): 10 N·m (1.0 kgf-m, 7.5 lbf-ft)

Front cylinder head

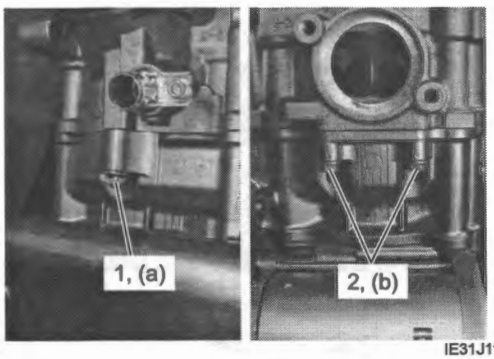

IE31J1140134-01

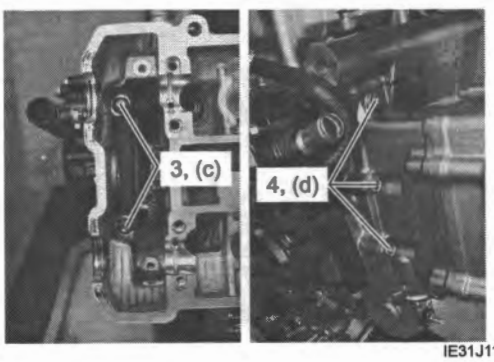

IE31J1140135-01

Rear cylinder head

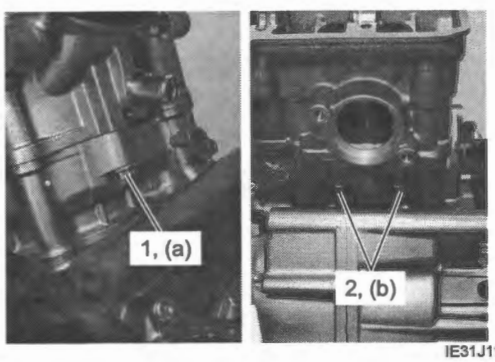

IE31J1140136-01

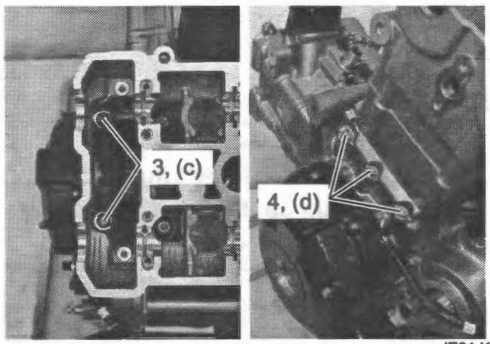

IE31J1140137-01

Cam Chain Tensioner

NOTE

Front cylinder cam chain tensioner (1) and rear cylinder cam chain tensioner (2) differ in shape.

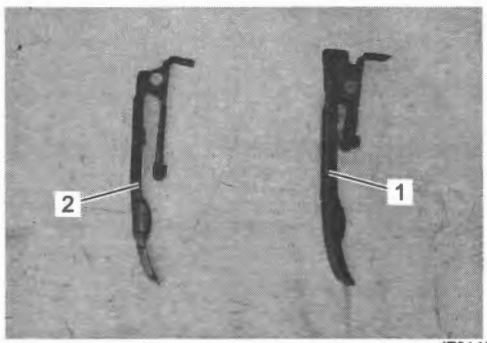

IE31J1140138-01

1) Pull the cam chains upward and install each cam chain tensioner into the respective cylinder heads.

NOTE

- **When installing the cam chain tensioners, insert the their holder ends (1) into each guide cast on the cylinder.**
- **When installing the front cylinder cam chain tensioner, through it rear side of the rib (2).**

Front cylinder side

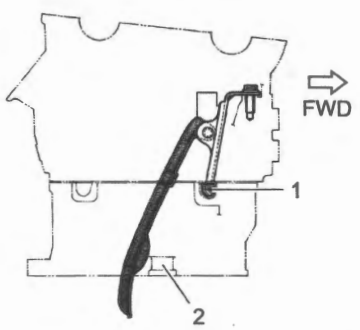

IE31J1140139-01

Rear cylinder side

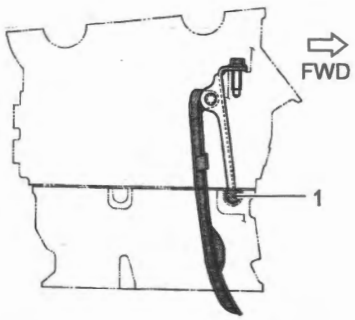

IE31J1140140-01

2) Tighten the cam chain tensioner mounting bolts (1) to the specified torque.

Tightening torque
Cam chain tensioner mounting bolt (a): 10 N·m (1.0 kgf-m, 7.5 lbf-ft)

Front cylinder side

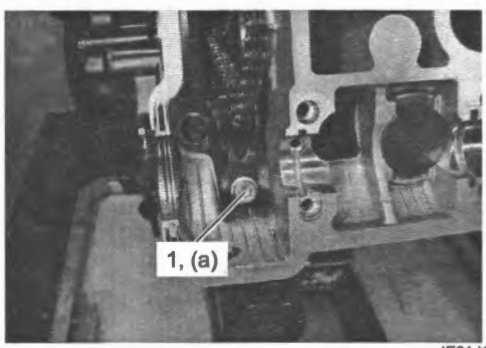

IE31J1140141-01

Rear cylinder side

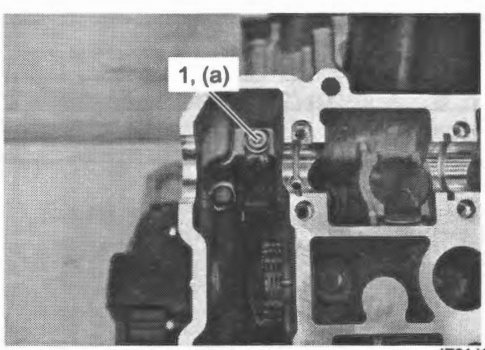

IE31J1140142-01

Front Cylinder Cam Drive Idle Gear / Sprocket No. 2

1) Turn the crankshaft counterclockwise and align "F | T" line (1) on the generator rotor with the index mark (2) of the valve timing inspection hole while keeping the cam chains pulled upward.

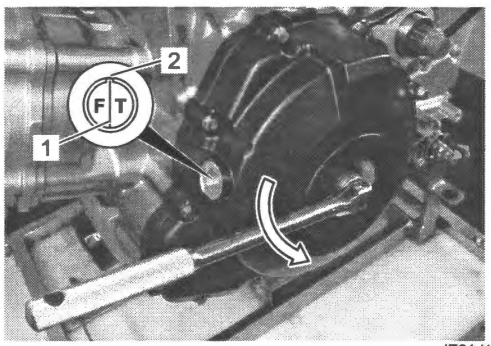

IE31J1140143-01

2) Install the cam drive idle gear/sprocket No. 2 (1) onto the front cylinder head and engage the cam chain (2) on it.

3) Align the punch marks (3) on the cam drive idle gear/sprocket No. 2 with the embossed line (4) on the cylinder head.

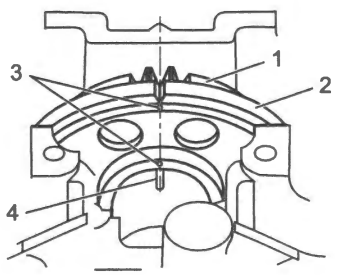

IL06L1140121-01

4) Apply engine oil to the idle shaft No. 2 (1) and install it.

NOTE

Face the convex part (2) of the idle shaft No. 2 (1) outside.

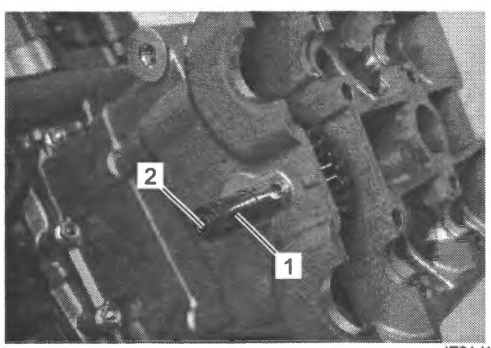

IE31J1140145-01

5) Check and correct the positions of the "F | T" line on the generator rotor and cam drive idle gear/sprocket No. 2 (1).

NOTICE

When checking the cam drive idle gear/sprocket No. 2 position, remove the cam chain slack at the cam chain guide (2) side by holding it by hand.

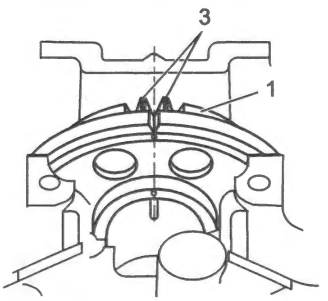

IL06L1140122-01

3. Paint

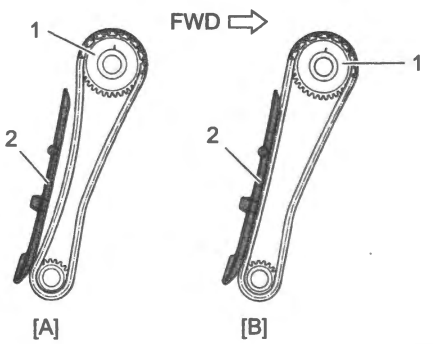

IE31J1140147-01

[A]: Incorrect	[B]: Correct

6) If the punch marks (1) does not align the embossed line (2), remove the cam drive idle gear/sprocket No. 2.

NOTE

Due to special valve train mechanism, aligning of the three elements; the punch marks (1), embossed line (2) and the gear tooth root on the cam drive idle gear/sprocket No. 2; can occur once every other rotation of crankshaft.

a) Rotate the crankshaft 360 degrees (1 turn) to bring the "F | T" line on the generator rotor to the index mark of the valve timing inspection hole again.

NOTICE

Rotate the crankshaft while pulling the cam chains upward.

b) Reinstall the cam drive idle gear/sprocket No. 2 to the correct position as shown.

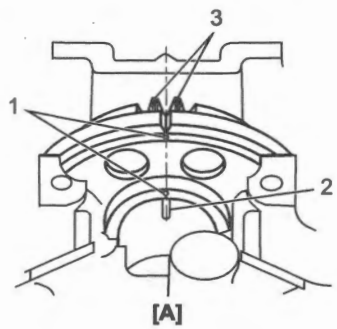

IL08L1140123-01

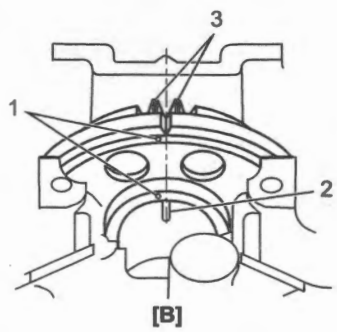

IL08L1140124-01

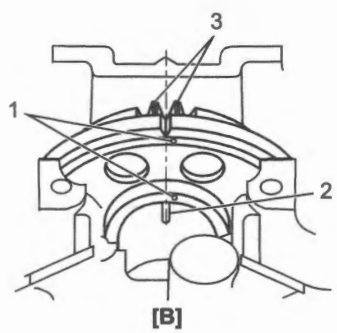

IL08L1140125-01

3. Paint	[A]: Correct	[B]: Incorrect

7) Apply grease to the new O-ring (1).

"A": Grease 99000–25011 (SUZUKI SUPER GREASE A)

8) Apply thread lock to the cylinder head cover No. 2 bolts (2) and tighten them to the specified torque.

"B": Thread lock cement 99000–32150 (THREAD LOCK CEMENT 1322D)

Tightening torque
Cylinder head cover No. 2 bolt (a): 10 N·m (1.0 kgf-m, 7.5 lbf-ft)

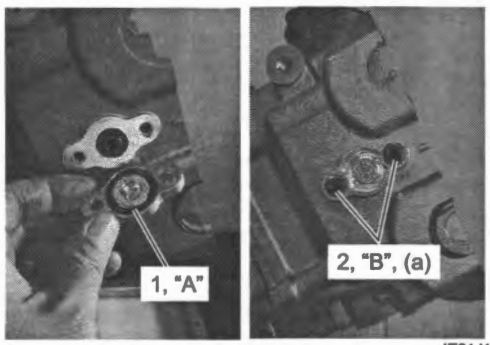

IE31J1140148-01

Front Cylinder Cam Chain Tension Adjuster

1) Install the new gasket (1) and tighten the cam chain tension adjuster cap bolt (2) fully.

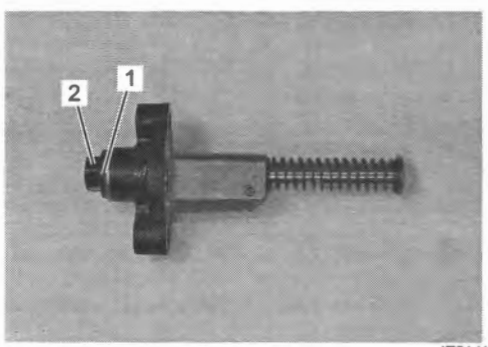

IE31J1140149-02

2) Compress the cam chain tension adjuster rod (1) fully by releasing the ratchet (2).

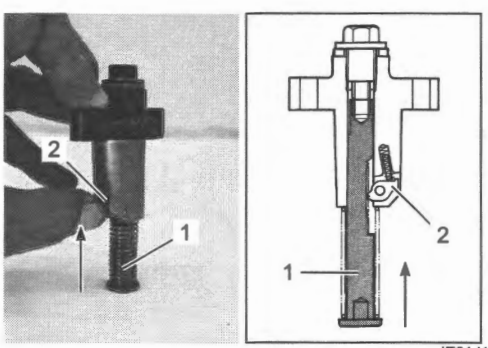

IE31J1140150-01

3) From this position, loosen the cam chain tension adjuster cap bolt (1) until locking the cam chain tension adjuster rod (2). Now the cam chain tension adjuster is ready to install.

NOTE

Loosen the cam chain tension adjuster cap bolt (1) while compressing the cam chain tension adjuster rod (2).

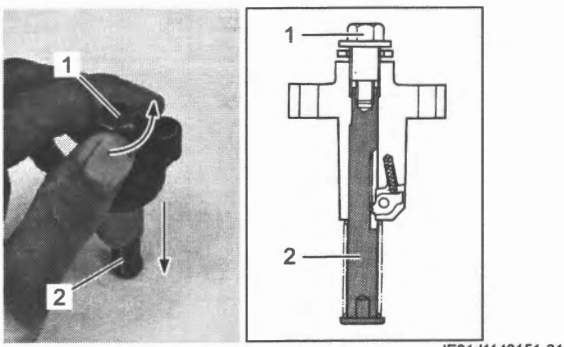

IE31J1140151-01

4) Install the new gasket (1) and cam chain tension adjuster (2).
5) Tighten the cam chain tension adjuster mounting bolts (3) to the specified torque.

Tightening torque
Cam chain tension adjuster mounting bolt (a): 10 N·m (1.0 kgf-m, 7.5 lbf-ft)

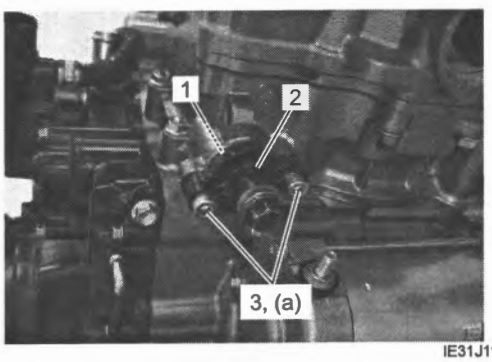

IE31J1140152-02

6) Release the cam chain tension adjuster by tightening the cap bolt (1).

NOTE

Click sound is heard when the cam chain tension adjuster rod is released.

7) Tighten the cam chain tension adjuster cap bolt (1) to the specified torque.

Tightening torque
Cam chain tension adjuster cap bolt (Front) (a): 23 N·m (2.3 kgf-m, 17.0 lbf-ft)

NOTICE

After installing the cam chain tension adjuster, check to be sure that the adjuster work properly by checking the slack of cam chain.

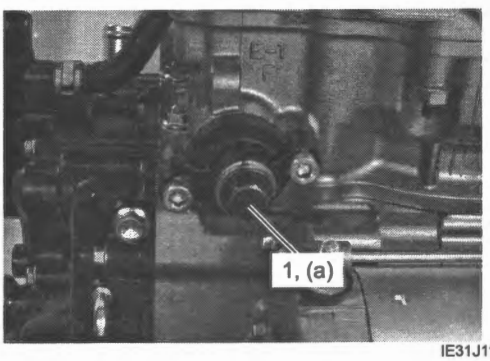

IE31J1140153-01

Rear Cylinder Cam Drive Idle Gear / Sprocket No. 2

1) For the rear cylinder cam drive idle gear/sprocket No. 2 installation, the crankshaft setting position (1) must be set at the same position (TDC of compression stroke) as the front one.

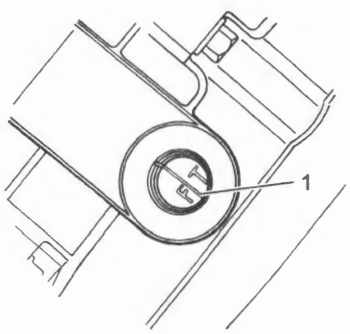

IE31J1140154-01

2) Install the rear cylinder cam drive idle gear/sprocket No. 2 to the correct position. Refer to "Front Cylinder Cam Drive Idle Gear / Sprocket No. 2" (Page 1D-41).

NOTE

The procedures are also the same as the front cylinder cam drive idle gear/sprocket No. 2 installation.

3) Check and correct the positions of the "F | T" line on the generator rotor and cam drive idle gear/sprocket No. 2 (1).

NOTICE

When checking the cam drive idle gear/ sprocket No. 2 position, remove the cam chain slack at the cam chain guide (2) side by holding it by hand.

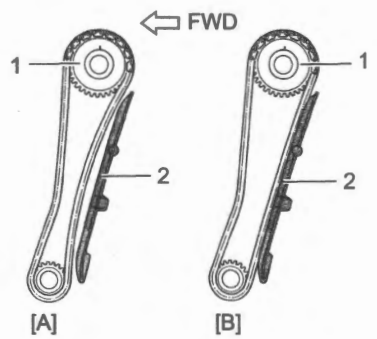

IE31J1140155-01

[A]: Incorrect	[B]: Correct

Rear Cylinder Cam Chain Tension Adjuster

1) Compress the cam chain tension adjuster rod (1) by releasing the ratchet (2).

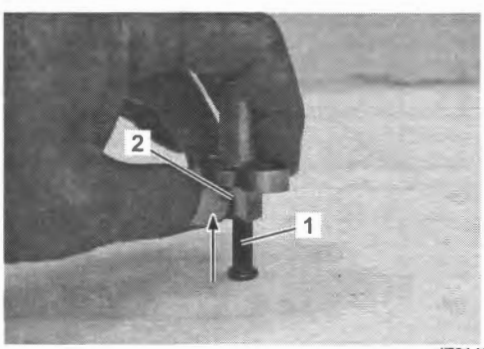

IE31J1140156-01

2) Install the new gasket (1).
3) Install the cam chain tension adjuster (2) with "UP" mark (3) faced to the top of cylinder head.
4) Tighten the cam chain tension adjuster mounting bolts (4) to the specified torque.

Tightening torque
Cam chain tension adjuster mounting bolt (a): 10 N·m (1.0 kgf-m, 7.5 lbf-ft)

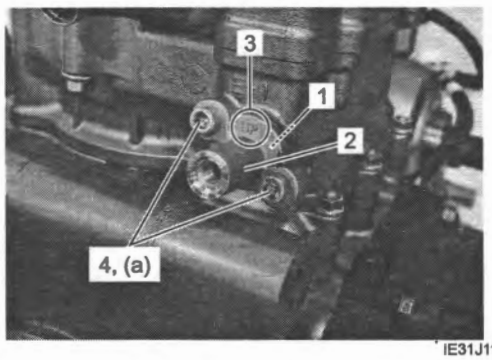

IE31J1140157-01

5) Apply grease to the new O-ring (1) and install it.

"A": Grease 99000–25011 (SUZUKI SUPER GREASE A)

6) Install the spring (2) and cam chain tension adjuster cap bolt (3).

NOTE

Click sound is heard when extending the cam chain tension adjuster rod.

7) Tighten the cam chain tension adjuster cap bolt (3) to the specified torque.

Tightening torque
Cam chain tension adjuster cap bolt (Rear) (a): 7 N·m (0.71 kgf-m, 5.20 lbf-ft)

NOTICE

After installing the cam chain tension adjuster, check to be sure that the adjuster work properly by checking the slack of cam chain.

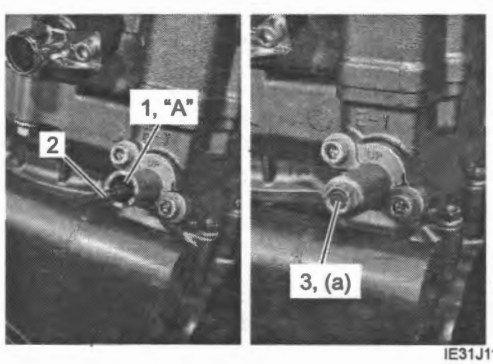

IE31J1140158-01

8) Rotate the generator rotor 720 degrees (2 turns) and align the "F | T" line (1) on the generator rotor with the index mark (2) of the valve timing inspection hole.

9) Recheck the positions of the punch marks (3) on each cylinder cam drive idle gear/sprocket No. 2.

Front cylinder TDC of compression stroke

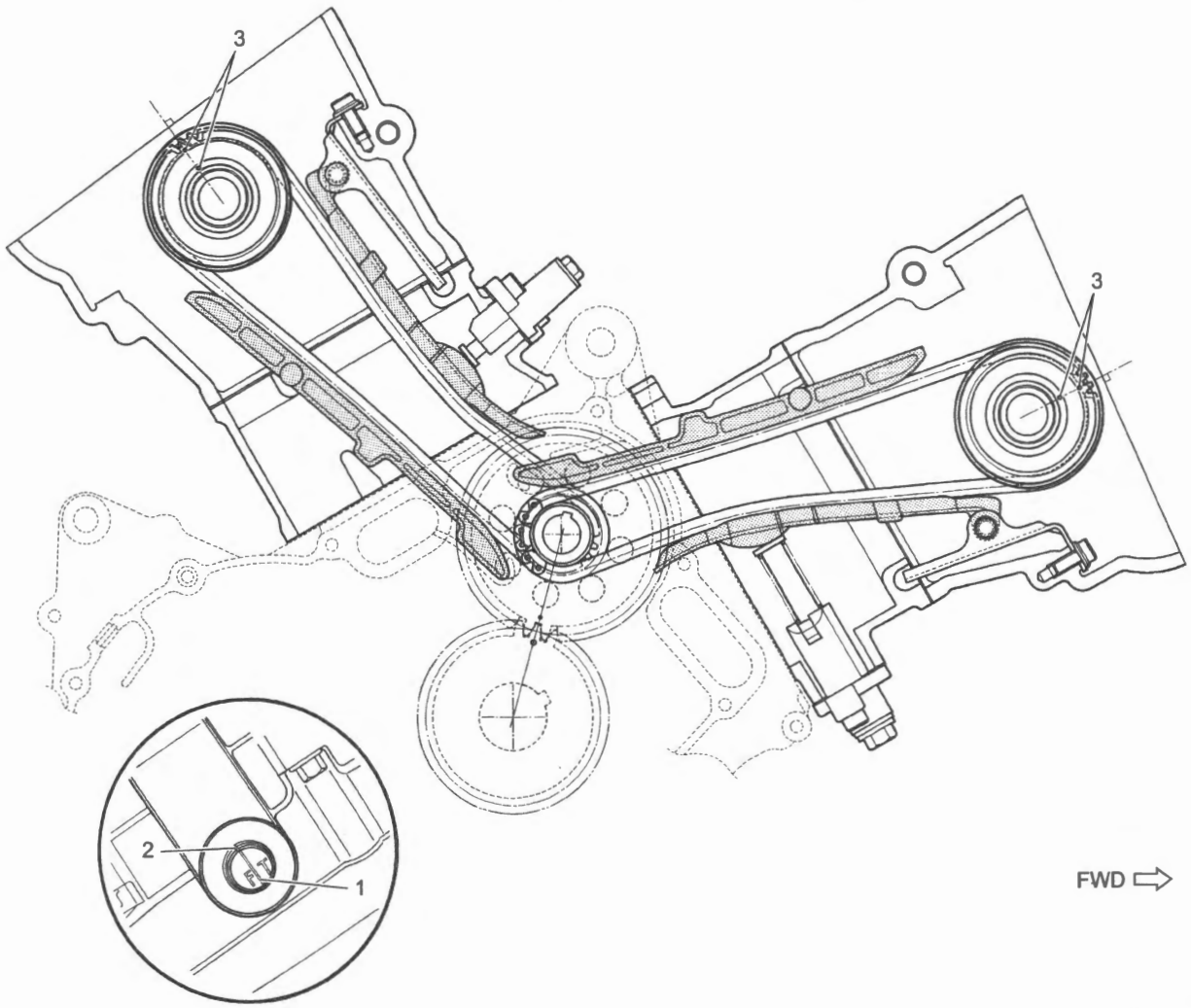

IL06L1140126-01

Cam Chain Tension Adjuster Inspection

BENL06L21406020

Refer to "Cam Chain Tension Adjuster / Cam Chain Tensioner / Cylinder Head Assembly / Cam Chain Guide / Cylinder Removal" (Page 1D-32) and "Cam Chain Tension Adjuster / Cam Chain Tensioner / Cylinder Head Assembly / Cam Chain Guide / Cylinder Installation" (Page 1D-36).

Unlock the ratchet (1), and move the push rod (2) in place to see if it slides smoothly. If any stickiness is noted or ratchet mechanism is faulty, replace the cam chain tension adjuster assembly with a new one.

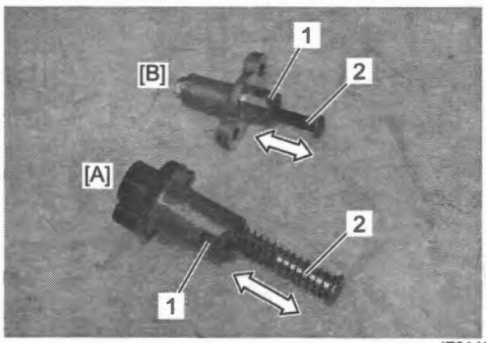

IE31J1140167-01

[A]:	Front cylinder cam chain tension adjuster
[B]:	Rear cylinder cam chain tension adjuster

Cam Drive Idle Gear / Sprocket No. 2 Bushing Inspection

BENL06L21406021

Refer to "Cam Chain Tension Adjuster / Cam Chain Tensioner / Cylinder Head Assembly / Cam Chain Guide / Cylinder Removal" (Page 1D-32) and "Cam Chain Tension Adjuster / Cam Chain Tensioner / Cylinder Head Assembly / Cam Chain Guide / Cylinder Installation" (Page 1D-36).

Inspect the cam drive idle gear/sprocket No. 2 bushing (1) for wear or damage. If any defects are found, replace the cam drive idle gear/sprocket No. 2, cam drive idle gear shaft and cam chain as a set.

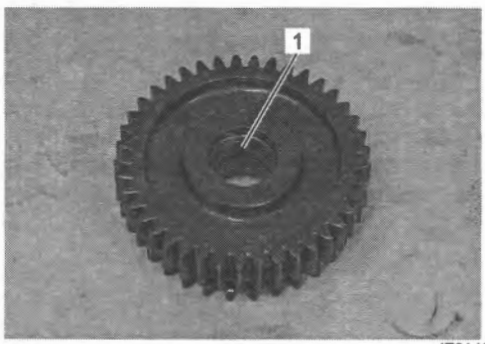

IE31J1140168-01

Valve/Valve Spring Components

BENL06L21406022

NOTE

The parts structure are also the same as front cylinder and rear cylinder.

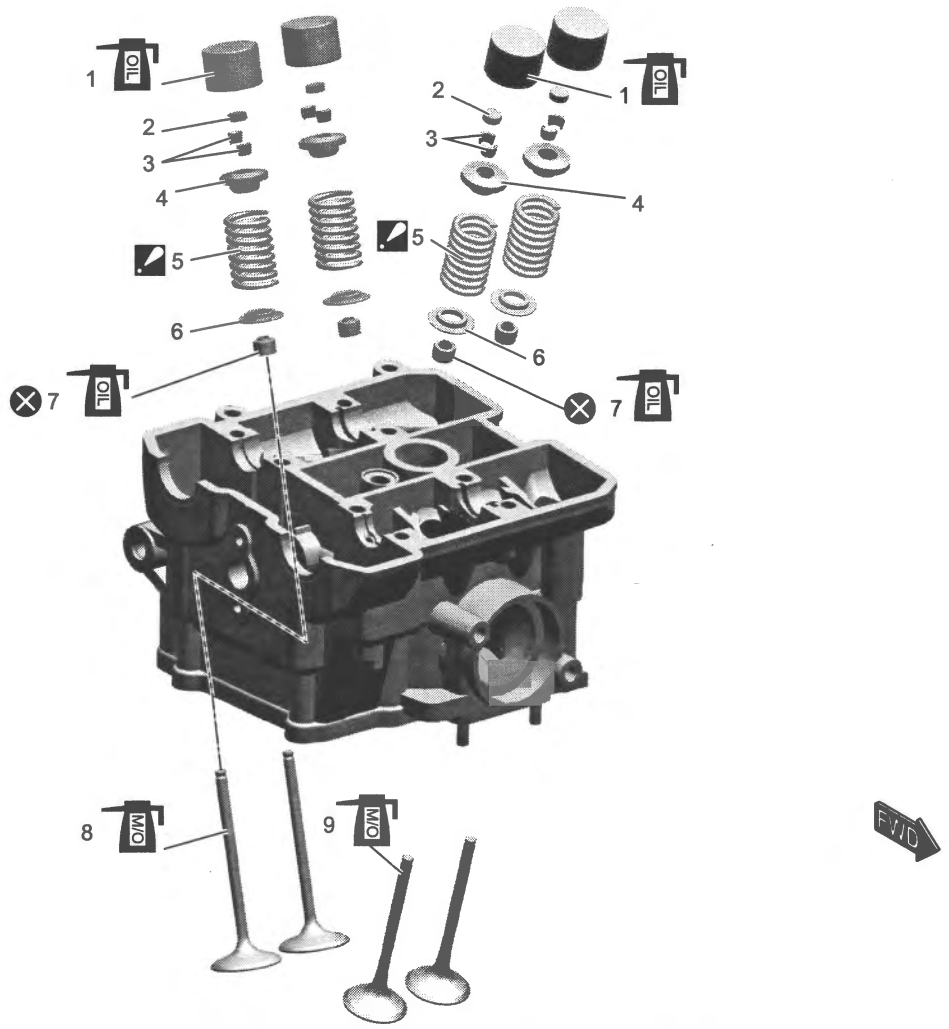

IL06L1140127-01

1. Tappet	6. Valve spring seat	M/O : Apply molybdenum oil.
2. Shim	7. Oil seal	⊗ : Do not reuse.
3. Cotter valve	8. Intake valve	
4. Valve spring retainer	9. Exhaust valve	
5. Valve spring : Face the small-pitch portion to the cylinder head.	OIL : Apply engine oil.	

Valve / Valve Spring Removal and Installation

BENL06L21406023

Refer to "Cam Chain Tension Adjuster / Cam Chain Tensioner / Cylinder Head Assembly / Cam Chain Guide / Cylinder Removal" (Page 1D-32) and "Cam Chain Tension Adjuster / Cam Chain Tensioner / Cylinder Head Assembly / Cam Chain Guide / Cylinder Installation" (Page 1D-36).

NOTICE

Identify the position of each removed part. Organize the parts so that they can be reinstalled in their original positions.

Removal

1) Remove the tappet (1) and shim (2) by fingers or magnetic hand.

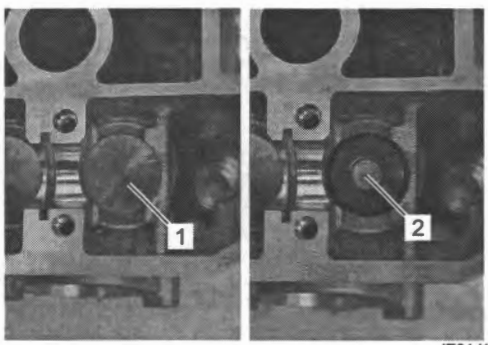

IE31J1140169-01

2) Install the sleeve protector between the valve spring and cylinder head.

NOTICE

To prevent damage of the tappet sliding surface with the valve lifter attachment, use the special tool.

3) Using the special tools, compress the valve spring and remove the two cotter halves (1) from the valve stem.

Special tool
(A): 09919–28620
(B): 09916–14510
(C): 09916–14522
09916–84511

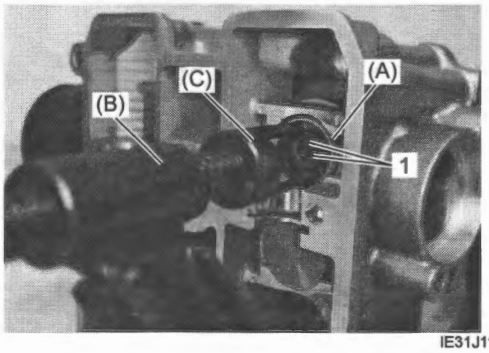

IE31J1140170-02

4) Remove the valve spring retainer (1) and valve spring (2).

5) Pull out the valve (3) from the combustion chamber side.

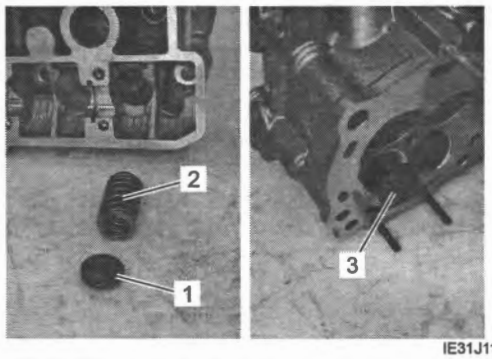

IE31J1140171-01

6) Remove the oil seal (1) and spring seat (2).

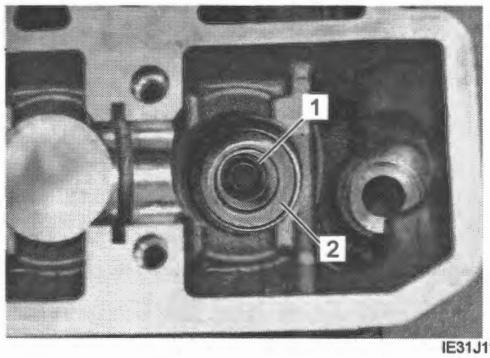

IE31J1140172-02

Installation

1) Install the valve spring seat (1).

2) Apply engine oil to the new oil seal (2), and press-fit it into position.

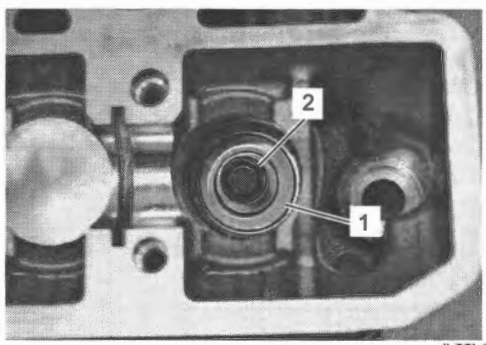

IL06L1140085-02

3) Insert the valve, with its stem coated with molybdenum oil solution all around and along the full stem length without any break.

NOTICE

When inserting the valve, take care not to damage the lip of the oil seal.

"A": Assembly lubrication (Molybdenum oil solution)

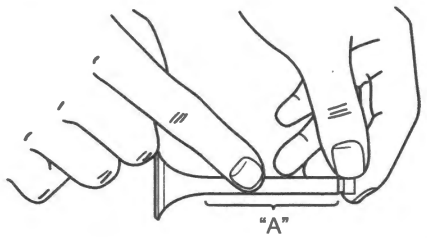

ID26J1140087-02

4) Install the valve spring with the small-pitch portion (1) facing cylinder head.

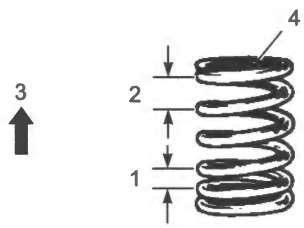

ID26J1140274-03

2. Large-pitch portion	4. Paint
3. UPWARD	

5) Put on the valve spring retainer (1), and using the special tools, press down the spring, fit the cotter halves (2) to the stem end, and release the lifter to allow the cotter halves to wedge in between retainer and stem.

NOTICE

- **Be sure to restore each spring and valve to their original positions.**
- **Be careful not to damage the valve and valve stem when handling it.**

Special tool
(A): 09919–28620
(B): 09916–14510
(C): 09916–14522
09916–84511

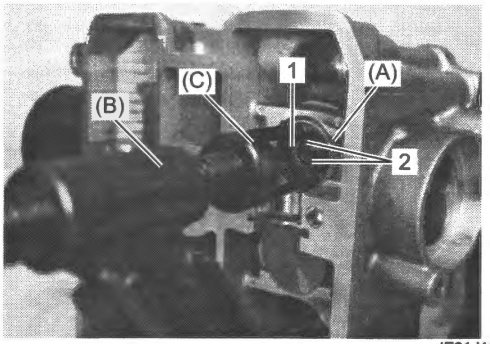

IE31J1140174-02

6) Be sure that the rounded lip (1) of the cotter fits snugly into the groove (2) in the stem end.

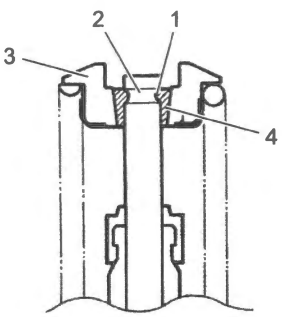

IE31J1140175-02

3. Valve spring retainer	4. Cotter

7) Apply engine oil to the tappets.
8) Install the tappet shims (1) and the tappets (2) to their original positions.

NOTE

When seating the tappet shim, be sure the figure printed surface faces the tappet.

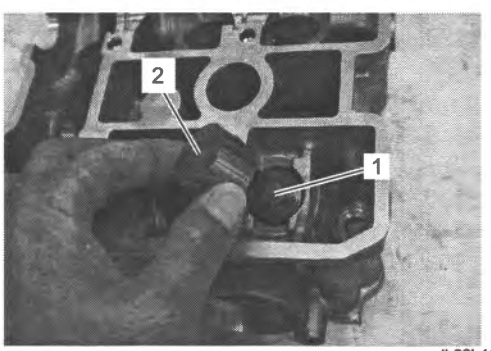

IL06L1140086-02

Valve Inspection

BENL06L21406024

Refer to "Valve / Valve Spring Removal and Installation" (Page 1D-48).

Valve Stem Runout

Support the valve using V-blocks, and check its runout using the dial gauge as shown in the figure. If the runout exceeds the service limit, replace the valve.

Special tool
(A): 09900–20607
(B): 09900–20701
(C): 09900–21304

Valve stem runout
Intake & Exhaust [Limit]: 0.05 mm (0.002 in)

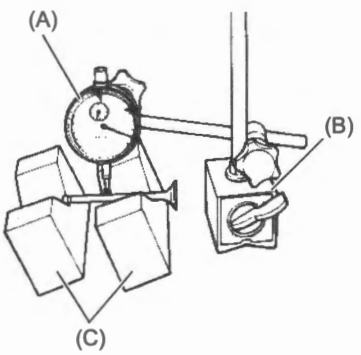

ID26J1140091-01

Valve Head Radial Runout

Place the dial gauge at a right angle to the valve head face and measure the valve head radial runout. If it measures more than the service limit, replace the valve.

Special tool
(A): 09900–20607
(B): 09900–20701
(C): 09900–21304

Valve head radial runout
Intake & Exhaust [Limit]: 0.03 mm (0.001 in)

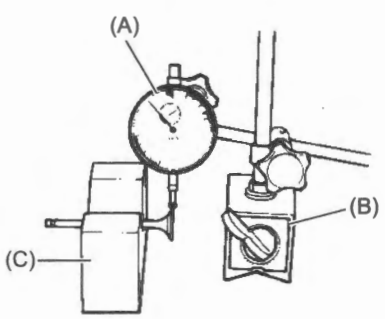

ID26J1140092-01

Valve Face Wear

Visually inspect each valve face for wear. Replace any valve with an abnormally worn face. The thickness of the valve face decreases as the face wears. Measure the valve head "a". If it is out of specification replace the valve with a new one.

Special tool
09900–20102

Valve head thickness
Intake [Limit]: 0.5 mm (0.02 in)
Exhaust [Limit]: 0.5 mm (0.02 in)

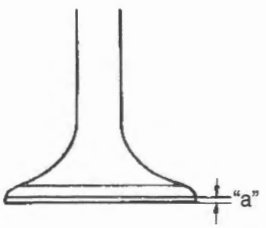

I649G1140233-02

Valve Stem Deflection

Lift the valve about 10 mm (0.39 in) from the valve seat. Measure the valve stem deflection in two directions, (1) and (2), perpendicular to each other, positioning the dial gauge as shown in the figure. If the deflection measured exceeds the service limit, then determine whether the valve or the guide should be replaced with a new one.

Special tool
(A): 09900–20607
(B): 09900–20701

Valve stem deflection
Intake [Limit]: 0.35 mm (0.014 in)
Exhaust [Limit]: 0.35 mm (0.014 in)

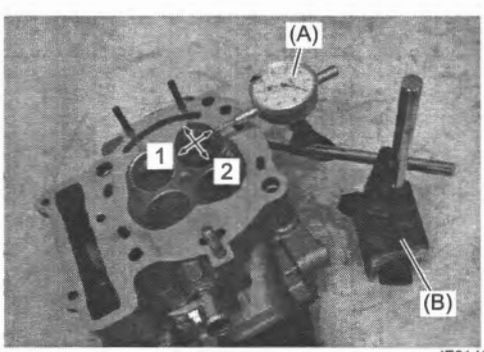

IE31J1140177-01

Valve Stem Wear

Measure the valve stem O.D. using the micrometer.
If the valve stem is worn down to the limit, as measured with a micrometer, replace the valve.
If the stem is within the limit, then replace the guide.
After replacing valve or guide, be sure to recheck the deflection.

Special tool
(A): 09912–66310

Valve stem O.D.
Intake [Standard]: 5.475 – 5.490 mm (0.2156 – 0.2161 in)
Exhaust [Standard]: 5.455 – 5.470 mm (0.2148 – 0.2154 in)

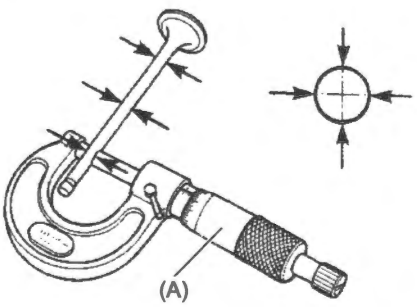

ID28J1140094-01

Valve Seat Width

1) Visually check for valve seat width on each valve face. If the valve face has worn abnormally, replace the valve.
2) Coat the valve seat with a red lead (Prussian Blue) and set the valve in place.
3) Rotate the valve with light pressure.

Special tool
(A): 09916–10911

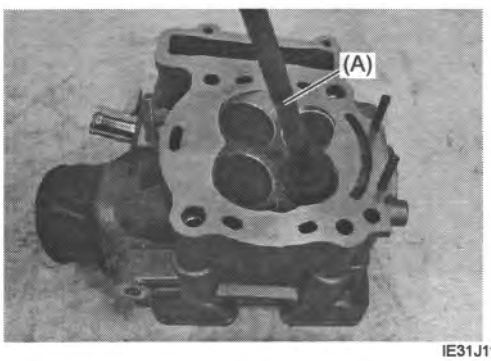

IE31J1140178-01

4) Check that the transferred red lead (Blue) on the valve face is uniform all around and in center of the valve face.
If the seat width "a" measured exceeds the standard value, or seat width is not uniform reface the seat using the seat cutter. ☞(Page 1D-52)

Valve seat width
Intake [Standard]: 1.17 – 1.37 mm (0.046 – 0.054 in)
Exhaust [Standard]: 1.31 – 1.51 mm (0.052 – 0.059 in)

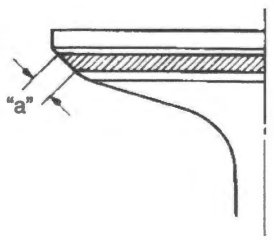

I649G1140246-02

Valve Seat Sealing Condition

1) Clean and assemble the cylinder head and valve components.
2) Fill the intake and exhaust ports with gasoline to check for leaks. If any leaks occur, inspect the valve seat and face for burrs or other things that could prevent the valve from sealing. ☞(Page 1D-52)

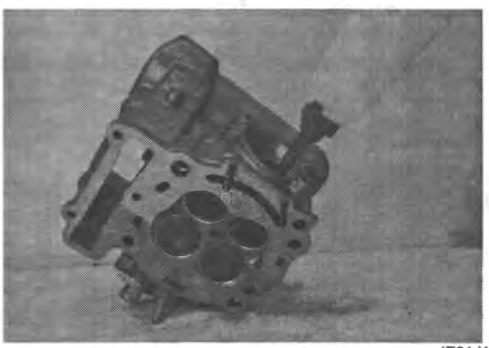

IE31J1140179-02

Valve Seat Repair

BENL06L21406025

Refer to "Valve / Valve Spring Removal and Installation" (Page 1D-48).

The valve seats (1) for both the intake and exhaust valves are machined to two different angles. The seat contact surface is cut at 45°.

NOTICE

- **The valve seat contact area must be inspected after each cut.**
- **Do not use lapping compound after the final cut is made. The finished valve seat should have a velvety smooth finish but not a highly polished or shiny finish. This will provide a soft surface for the final seating of the valve which will occur during the first few seconds of engine operation.**

NOTE

After servicing the valve seats, be sure to check the valve clearance after the cylinder head has been installed. ☞(Page 1D-22)

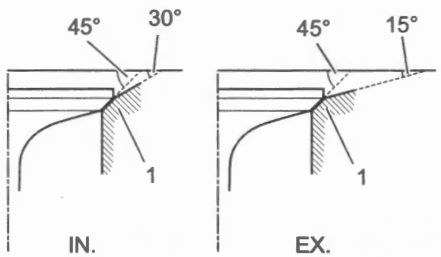

IE31J1140180-01

	Intake	Exhaust
Seat angle	30°/45°	15°/45°
Seat width	1.17 – 1.37 mm (0.046 – 0.054 in)	1.31 – 1.51 mm (0.052 – 0.059 in)
Valve diameter	36 mm (1.4 in)	33 mm (1.3 in)
Valve guide I.D.	5.500 – 5.512 mm (0.2165 – 0.2170 in)	←

Valve Spring Inspection

BENL06L21406026

Refer to "Valve / Valve Spring Removal and Installation" (Page 1D-48).

The force of the coil spring keeps the valve seat tight. Weakened spring results in reduced engine power output and often accounts for the chattering noise coming from the valve mechanism.

Check the valve springs for proper strength by measuring its free length and also by the force required to compress it. If the spring length is less than the service limit or if the force required to compress the spring does not fall within the range specified, replace spring as a set.

Special tool
(A): 09900–20102

Valve spring free length
Intake [Limit]: 39.6 mm (1.56 in)
Exhaust [Limit]: 39.6 mm (1.56 in)

Valve spring pre-load when compressed to 35.6 mm (1.40 in)
Intake [Standard]: 197 – 227 N (20.1 – 23.1 kgf, 44.3 – 51.0 lbf)
Exhaust [Standard]: 197 – 227 N (20.1 – 23.1 kgf, 44.3 – 51.0 lbf)

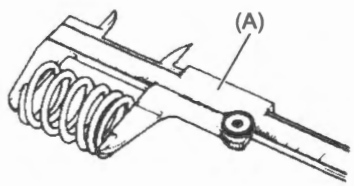

ID26J1140098-01

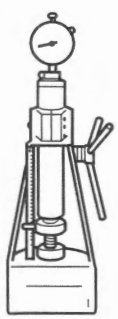

ID26J1140263-01

Cylinder Head Disassembly and Reassembly

BENL06L21406027

Refer to "Cam Chain Tension Adjuster / Cam Chain Tensioner / Cylinder Head Assembly / Cam Chain Guide / Cylinder Removal" (Page 1D-32) and "Cam Chain Tension Adjuster / Cam Chain Tensioner / Cylinder Head Assembly / Cam Chain Guide / Cylinder Installation" (Page 1D-36).

NOTE

The front and rear cylinder heads are assembled symmetrically and therefore the disassembly procedure for one side is the same as that for the other side.

Disassembly

1) Remove the oil gallery plug (M6) (1) and water union (2).

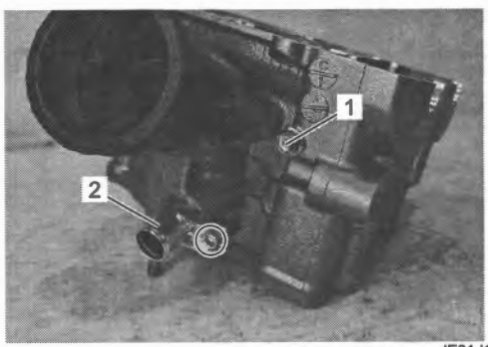

IE31J1140181-01

2) Remove the following parts.
   - Intake pipe (1): ☞(Page 1D-10)
   - Valves (2) and valve springs: ☞(Page 1D-48)
   - Valve guides: ☞(Page 1D-54)

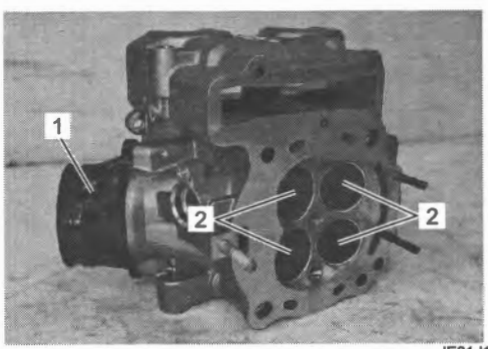

IE31J1140182-01

Reassembly

1) Install the following parts.
   - Intake pipe: ☞(Page 1D-10)
   - Valves and valve springs: ☞(Page 1D-48)
   - Valve guides: ☞(Page 1D-54)
2) Apply engine coolant to the new O-ring (1) and install the water union (2).
3) Tighten the water union bolt (3) to the specified torque.

Tightening torque
Water union bolt (a): 10 N·m (1.0 kgf-m, 7.5 lbf-ft)

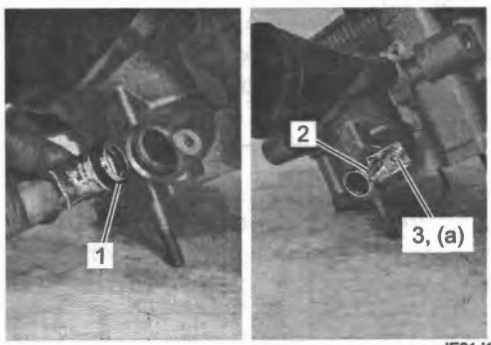

IE31J1140183-01

4) Install the oil gallery plug (M6) (1) with the new gasket and tighten it to the specified torque.

Tightening torque
Oil gallery plug (M6) (a): 10 N·m (1.0 kgf-m, 7.5 lbf-ft)

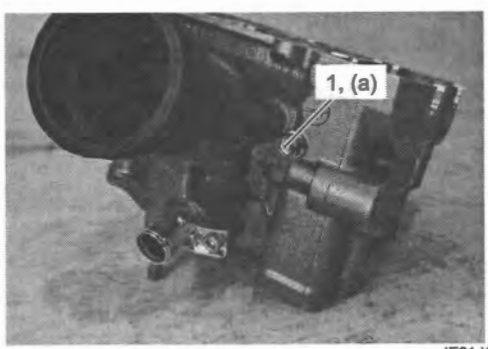

IE31J1140184-01

Cylinder Head Inspection

BENL06L21406028

Refer to "Cam Chain Tension Adjuster / Cam Chain Tensioner / Cylinder Head Assembly / Cam Chain Guide / Cylinder Removal" (Page 1D-32) and "Cam Chain Tension Adjuster / Cam Chain Tensioner / Cylinder Head Assembly / Cam Chain Guide / Cylinder Installation" (Page 1D-36).

1) Decarbonize the combustion chambers.
2) Check the gasket surface of the cylinder head for distortion with a straightedge and thickness gauge, taking a clearance reading at several places as indicated. If the largest reading at any position of the straightedge exceeds the limit, replace the cylinder head.

Special tool
09900–20803

Cylinder head distortion
[Limit]: 0.05 mm (0.002 in)

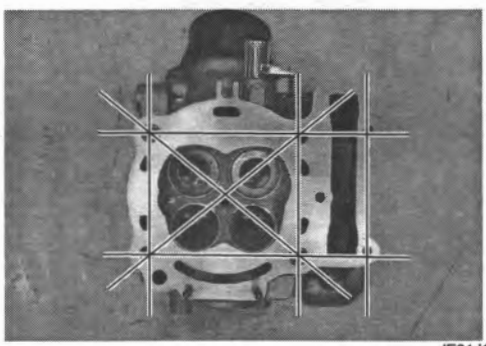

IE31J1140185-01

Valve Guide Replacement

BENL06L21406029

Refer to "Valve / Valve Spring Removal and Installation" (Page 1D-48).

1) Using the special tool, drive the valve guide out toward the intake or exhaust camshaft side.

Special tool
(A): 09916–44910

NOTE

- **Discard the removed valve guide sub assemblies.**
- **Only oversized valve guides are available as replacement parts. (Part No. 11115-32E70)**

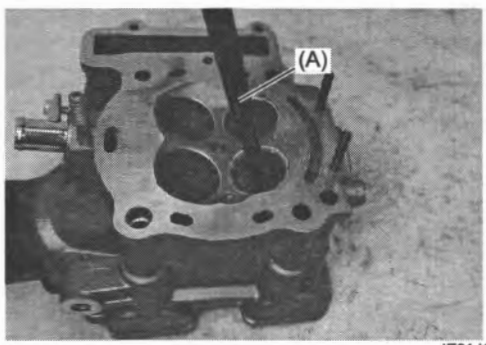

IE31J1140186-01

2) Refinish the valve guide holes in the cylinder head using the special tools.
3) Remove the special tools by turning clockwise and raising them at the same time.

NOTICE

Never turn the special tools counterclockwise, as this will dull the blades.

Special tool
(A): 09916–34580
(B): 09916–34542

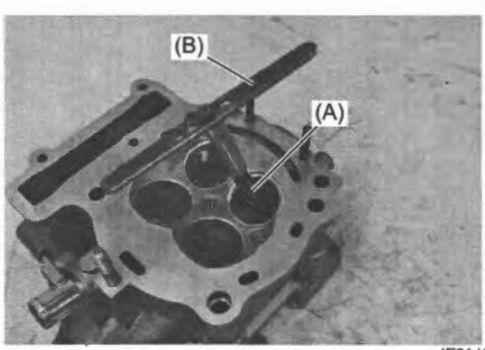

IE31J1140187-01

4) Cool down the new valve guides in a freezer for about one hour and heat the cylinder head to 100 – 150 °C (212 – 302 °F).

NOTICE

Do not use a burner to heat the valve guide hole to prevent cylinder head distortion.

5) Apply engine oil to each valve guide and valve guide hole.

NOTICE

Failure to oil the valve guide hole before driving the new guide into place may result in a damaged guide or head.

6) Drive the guide into the guide hole using the valve guide installer and attachment.

NOTE

Install the valve guide until the attachment contacts the cylinder head.

Special tool
(A): 09916–44910
(B): 09916–53340

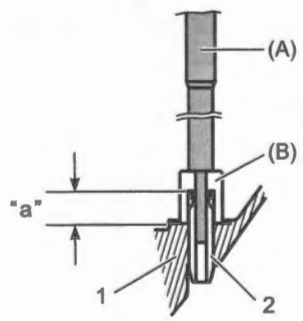

ID26J1140106-01

1. Cylinder head	"a": 17.0 mm (0.67 in)
2. Valve guide	

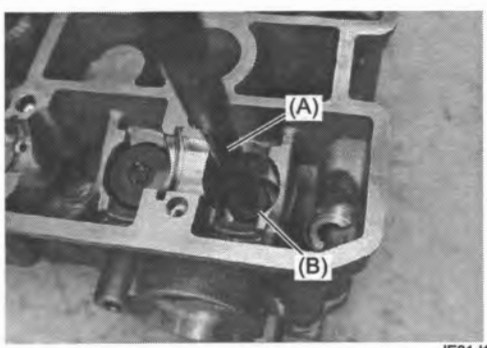

IE31J1140188-01

7) After installing the valve guides, refinish their guiding bores using the reamer. Be sure to clean and oil the guides after reaming.

NOTE

- **Cool down the cylinder head to ambient air temperature.**
- **Insert the reamer from the combustion chamber and always turn the reamer handle clockwise.**

Special tool
(A): 09916–34542
(B): 09916–34550

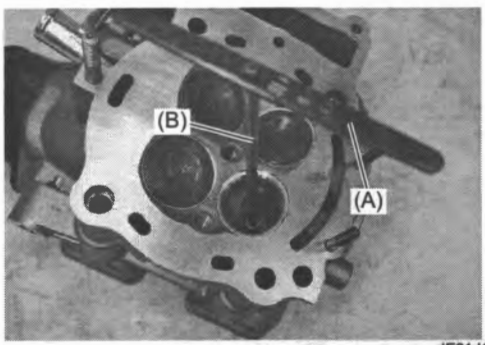

IE31J1140189-01

Cylinder Inspection

BENL06L21406030

Refer to "Cam Chain Tension Adjuster / Cam Chain Tensioner / Cylinder Head Assembly / Cam Chain Guide / Cylinder Removal" (Page 1D-32) and "Cam Chain Tension Adjuster / Cam Chain Tensioner / Cylinder Head Assembly / Cam Chain Guide / Cylinder Installation" (Page 1D-36).

Cylinder Distortion

Check the gasket surface of the cylinder for distortion with a straightedge and thickness gauge, taking a clearance reading at several places as indicated. If the largest reading at any position of the straightedge exceeds the limit, replace the cylinder.

Special tool
09900–20803

Cylinder distortion
[Limit]: 0.05 mm (0.002 in)

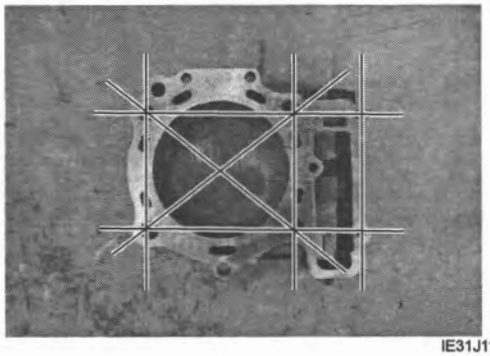

IE31J1140190-01

Cylinder Bore

Check the cylinder wall for any scratches, nicks or other damage. Measure the cylinder bore diameter at six places.

Special tool
(A): 09900–20530

Cylinder bore
[Standard]: 100.000 – 100.015 mm (3.9370 – 3.9376 in)
[Limit]: No nicks or scratches

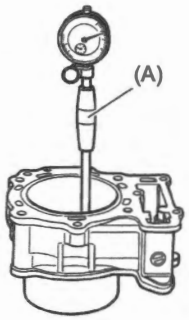

IE31J1140191-01

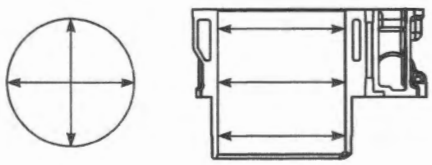

IE31J1140192-01

Piston Components

BENL06L21406031

NOTE

The parts structure are also the same as front cylinder and rear cylinder.

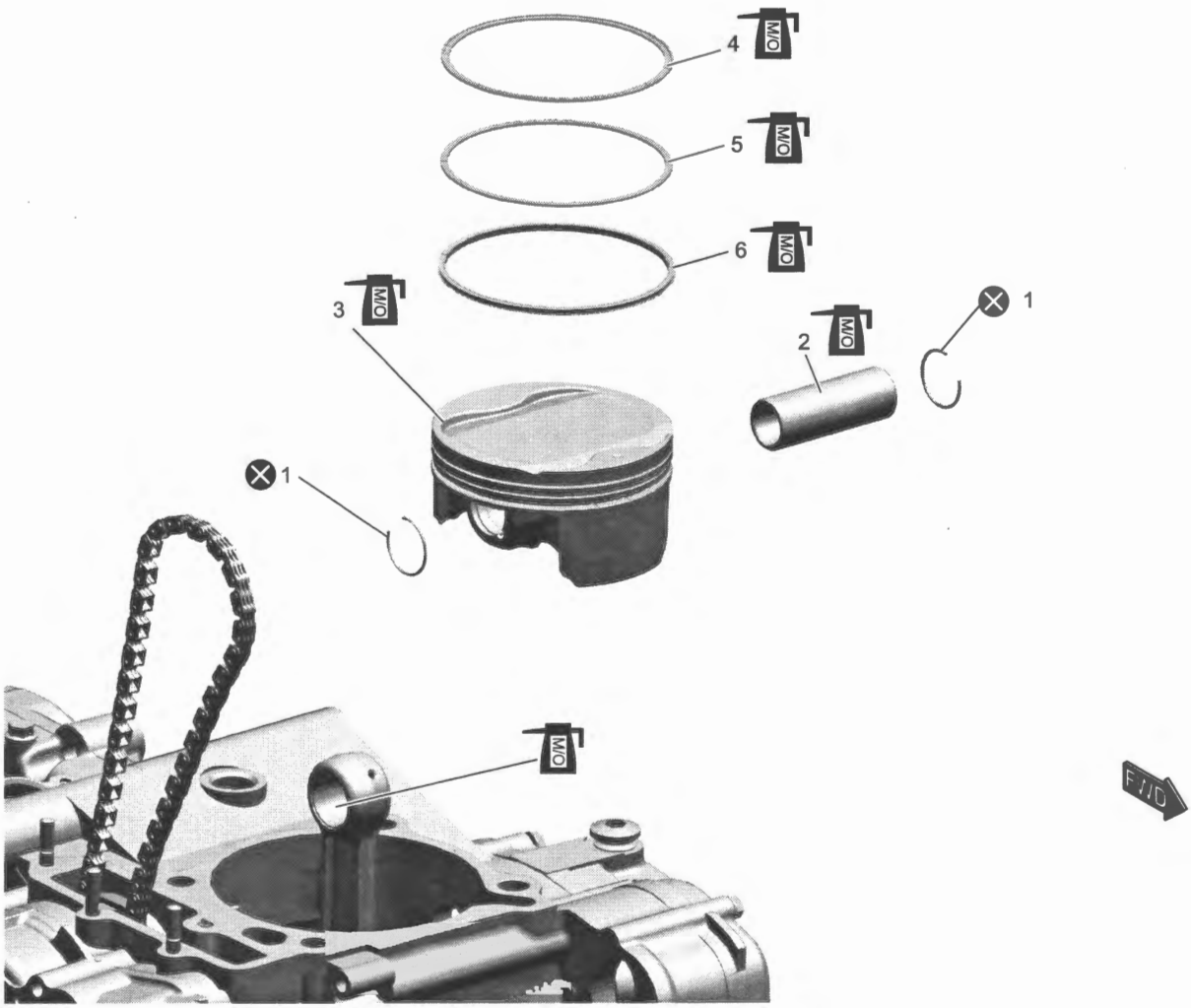

IL06L1140087-02

1. Piston pin circlip	4. 1st ring	M/O : Apply molybdenum oil.
2. Piston pin	5. 2nd ring	⊗ : Do not reuse.
3. Piston	6. Oil ring	

Piston Removal and Installation

BENL06L21406032

Refer to "Cam Chain Tension Adjuster / Cam Chain Tensioner / Cylinder Head Assembly / Cam Chain Guide / Cylinder Removal" (Page 1D-32) and "Cam Chain Tension Adjuster / Cam Chain Tensioner / Cylinder Head Assembly / Cam Chain Guide / Cylinder Installation" (Page 1D-36).

NOTE

The front and rear pistons are installed symmetrically and therefore the removal procedure for one side is the same as that for the other side.

Removal

1) Place a clean rag over the cylinder base so as not to drop the piston pin circlips (1) into the crankcase.
2) Remove the piston pin circlip (1).
3) Draw out the piston pin (2) and remove the piston (3).

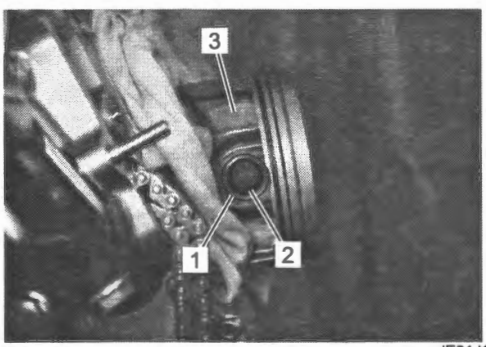

IE31J1140193-01

Installation

1) When installing the piston pin, apply molybdenum oil solution onto the piston pin.

NOTE

When installing the piston, the indent (1) on the piston head must be faced to exhaust side.

"A": Assembly lubrication (Molybdenum oil solution)

2) Install the piston pin (2).

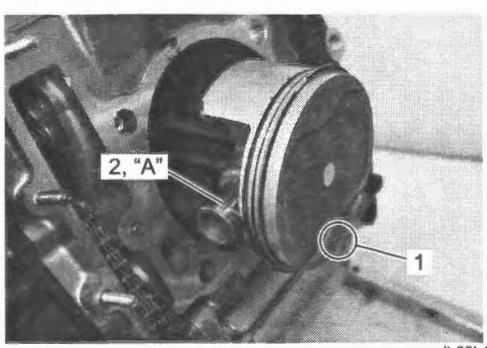

IL06L1140088-02

3) Place a clean rag over the cylinder base so as not to drop the piston pin circlips (1) into the crankcase.
4) Install the new piston pin circlip (1).

NOTE

End gap of the circlip (1) should not be aligned with the cutaway (2) in the piston pin bore.

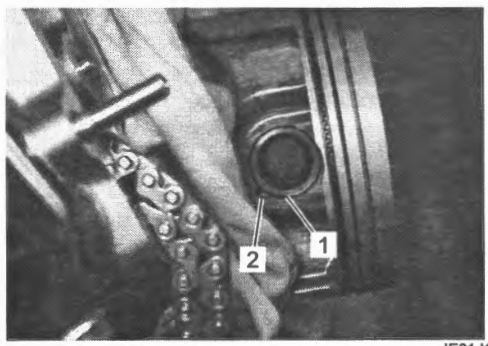

IE31J1140195-02

Piston Ring Removal and Installation

BENL06L21406033

Refer to "Piston Removal and Installation" (Page 1D-58).

NOTE

The front and rear piston rings are installed symmetrically and therefore the removal procedure for one side is the same as that for the other side.

Removal

1) Carefully spread the ring opening with your thumbs and then push up the opposite side of the 1st ring to remove it.

NOTE

Do not expand the piston ring excessively since it is apt to be broken down.

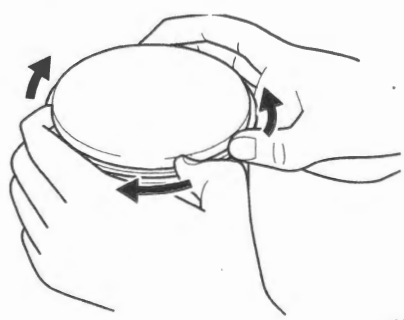

I831G1140178-01

2) Remove the 2nd ring and oil ring in the same procedure.

Installation

NOTE

- **When installing the piston ring, be careful not to damage the piston.**
- **Do not expand the piston ring excessively since it is apt to be broken down.**

1) Install the piston rings in the order of the oil ring, 2nd ring and 1st ring.
   a) The first member to go into the of the oil ring groove is a spacer (1).
   After placing the spacer, fit the two side rails (2).

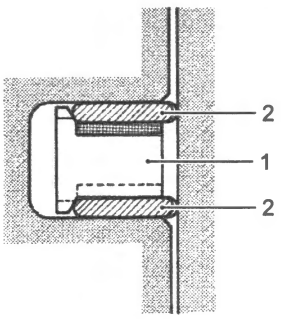

I718H1140143-04

NOTICE

When installing the spacer, be careful not to allow its two ends to overlap in the groove.

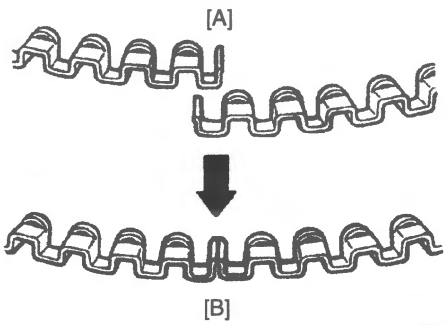

ID26J1140275-03

[A]: Incorrect	[B]: Correct

   b) Install the 2nd ring (1) and 1st ring (2) to piston.

NOTE

1st ring (2) and 2nd ring (1) differ in shape.

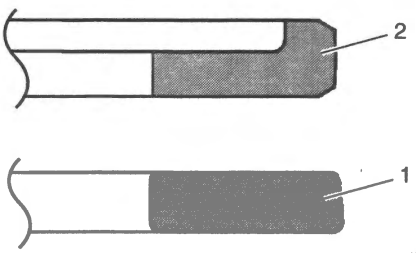

IE31J1140196-01

NOTE

- **2nd ring (1) has letters [2R] marked on the side. Be sure to bring the marked side to the top when fitting it to the piston.**
- **Bring the concave side of 1st ring (2) to the top when fitting it to the piston.**

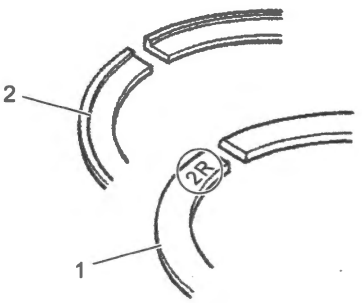

IE31J1140197-01

2) Position the gaps of the three rings and side rails as shown.

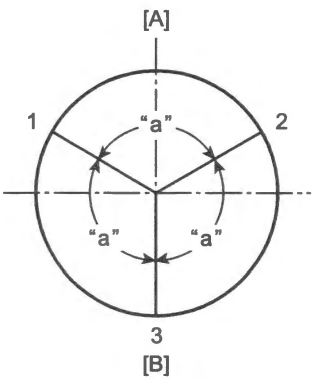

IH18K1140213-01

[A]: EX.
[B]: IN.
1. 2nd ring and lower side rail
2. Upper side rail
3. 1st ring and spacer
"a": 120°

Piston and Piston Ring Inspection

BENL06L21406034

Refer to "Piston Ring Removal and Installation" (Page 1D-58).

Piston Diameter

Measure the piston diameter using the micrometer at 10 mm (0.4 in) "a" from the skirt end. If the piston diameter is less than the service limit, replace the piston.

Special tool
(A): 09900–20204

Piston diameter
Measure at 10 mm (0.4 in) from the skirt end.
[Limit]: 99.880 mm (3.9323 in)

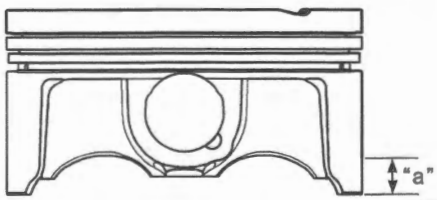

IE31J1140198-01

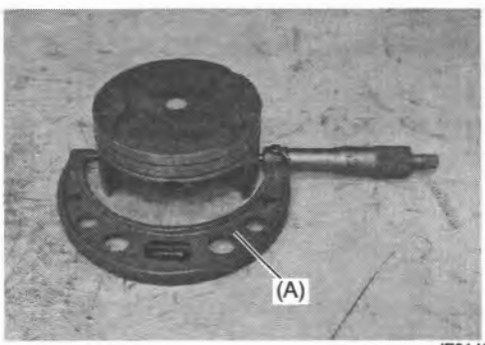

IE31J1140199-01

Piston to Cylinder Clearance

Subtract the piston diameter from the cylinder bore diameter. If the piston to cylinder clearance exceeds the service limit, replace both the cylinder and the piston.

Piston to cylinder clearance
[Limit]: 0.120 mm (0.0047 in)

Piston Ring to Groove Clearance

Measure the side clearances of the 1st and 2nd piston rings using the thickness gauge. If any of the clearances exceed the limit, replace both the piston and piston rings.

Special tool
(A): 09900–20803
(B): 09912–66310

Piston ring to groove clearance
1st [Limit]: 0.180 mm (0.0071 in)
2nd [Limit]: 0.150 mm (0.0059 in)

Piston ring groove width
1st [Standard] "a": 0.83 – 0.85 mm (0.0326 – 0.0334 in)
1st [Standard] "b": 1.30 – 1.32 mm (0.0511 – 0.0519 in)
2nd [Standard]: 1.01 – 1.03 mm (0.0398 – 0.0406 in)
Oil [Standard]: 2.01 – 2.03 mm (0.0791 – 0.0799 in)

Piston ring thickness
1st [Standard] "c": 0.83 – 0.85 mm (0.0326 – 0.0334 in)
1st [Standard] "d": 1.30 – 1.32 mm (0.0511 – 0.0519 in)
2nd [Standard]: 0.97 – 0.99 mm (0.0382 – 0.0390 in)

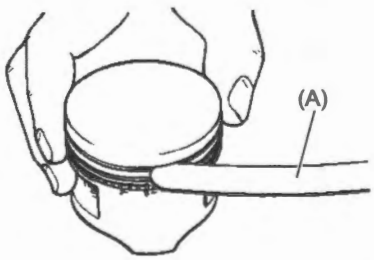

ID26J1140124-01

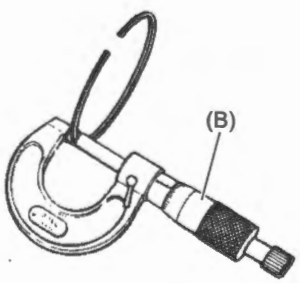

ID26J1140125-01

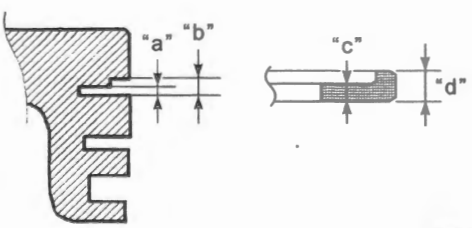

IE31J1140200-01

Piston Ring Free End Gap and Piston Ring End Gap
Measure the piston ring free end gap using vernier calipers. Next, fit the piston ring squarely into the cylinder and measure the piston ring end gap using the thickness gauge. If any of the measurements exceed the service limit, replace the piston ring with a new one.

Special tool
(A): 09900–20102
(B): 09900–20803

Piston ring free end gap
1st [Limit]: 8.8 mm (0.35 in)
2nd [Limit]: 11.1 mm (0.43 in)

Piston ring end gap
1st [Limit]: 0.50 mm (0.020 in)
2nd [Limit]: 0.70 mm (0.028 in)

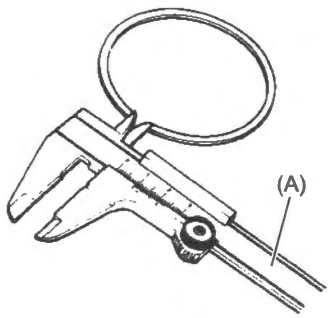

ID26J1140126-02

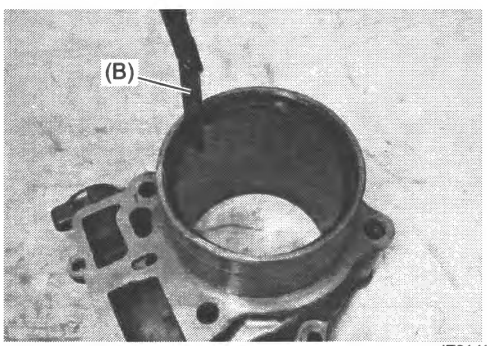

IE31J1140201-01

Piston Pin Bore
Measure the piston pin bore inside diameter using the small bore gauge. If measurement is out of specification, replace the piston.

Special tool
(A): 09900–20602
(B): 09900–22403

Piston pin bore I.D.
[Limit]: 22.030 mm (0.8673 in)

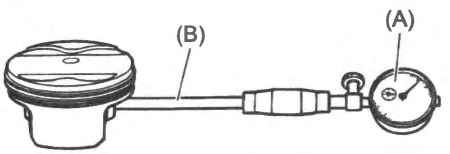

IE31J1140202-01

Piston Pin
Measure the piston pin outside diameter at three positions using the micrometer. If any of the measurements are out of specification, replace the piston pin.

Special tool
(A): 09912–66310

Piston pin O.D.
[Limit]: 21.980 mm (0.8654 in)

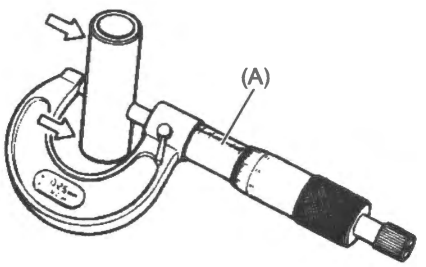

ID26J1140129-01

Cam Chain Guide Inspection

BENL06L21406035

Refer to "Cam Chain Tension Adjuster / Cam Chain Tensioner / Cylinder Head Assembly / Cam Chain Guide / Cylinder Removal" (Page 1D-32) and "Cam Chain Tension Adjuster / Cam Chain Tensioner / Cylinder Head Assembly / Cam Chain Guide / Cylinder Installation" (Page 1D-36).

Check the contacting surface of the cam chain guide. If it is worn or damaged, replace it with a new one.

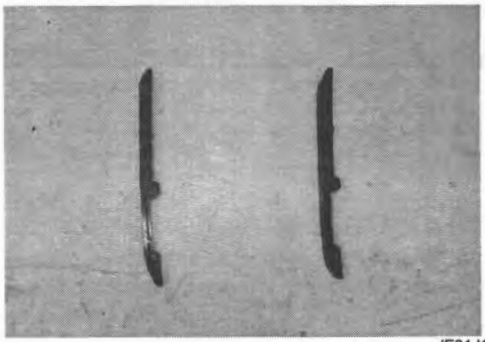

IE31J1140203-01

Cam Chain Tensioner Inspection

BENL06L21406036

Refer to "Cam Chain Tension Adjuster / Cam Chain Tensioner / Cylinder Head Assembly / Cam Chain Guide / Cylinder Removal" (Page 1D-32) and "Cam Chain Tension Adjuster / Cam Chain Tensioner / Cylinder Head Assembly / Cam Chain Guide / Cylinder Installation" (Page 1D-36).

Check the contacting surface of the cam chain tensioner. If it is worn or damaged, replace it with a new one.

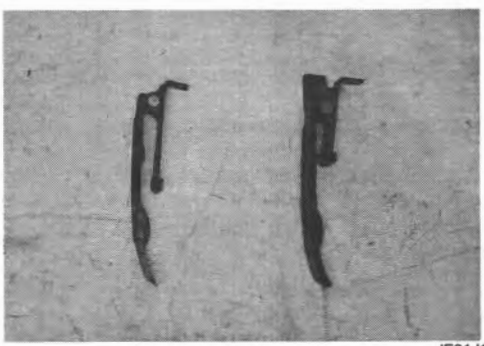

IE31J1140204-01

Crankcase Assembly Disassembly

BENL06L21406037

Refer to "Engine Assembly Removal" (Page 1D-22) and "Piston Removal and Installation" (Page 1D-58).

1) Remove the oil filter (1). ☞(Page 1E-4)
2) Remove the oil cooler (2). ☞(Page 1E-5)
3) Remove the starter motor assembly (3). ☞(Page 1I-5)

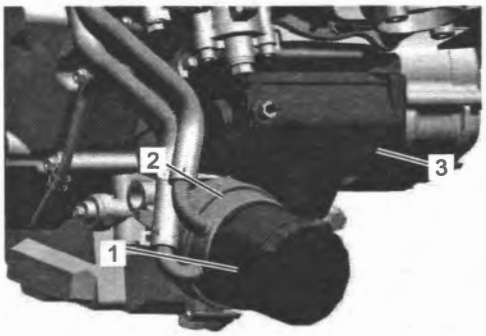

IL06L1140128-01

4) Remove the generator cover, starter torque limiter (1) and starter idle gear (2). ☞(Page 1I-9)

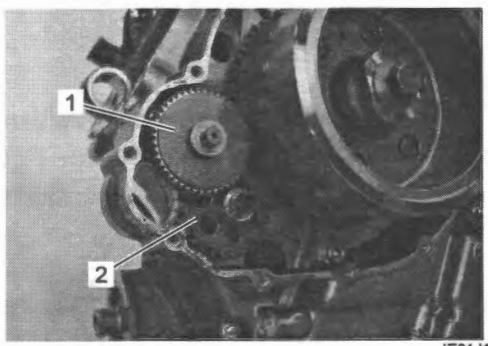

IE31J1140206-01

5) Remove the water pump case (1) and clutch cover (2). ☞(Page 5C-15)

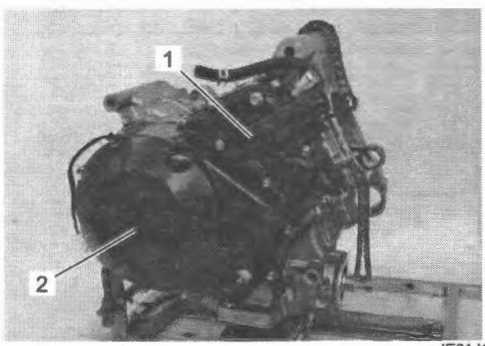

IE31J1140207-02

6) Remove the clutch component parts (1). ☞(Page 5C-15)

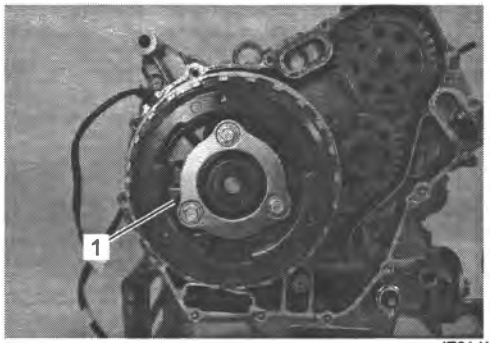

IE31J1140208-01

7) Remove the GP switch (1). ☞(Page 5B-12)

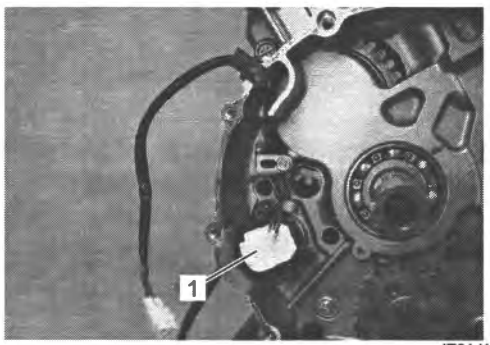

IE31J1140209-01

8) Remove the oil pressure switch (1). ☞(Page 1E-6)

9) Remove the oil strainer (2) and oil pressure regulator (3). ☞(Page 1E-4)

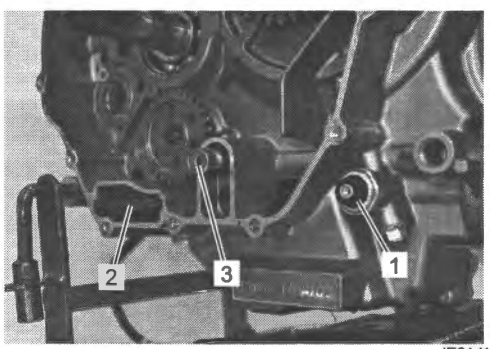

IE31J1140210-01

10) Remove the snap ring (1) and oil pump driven gear (2).

Special tool
09900–06107

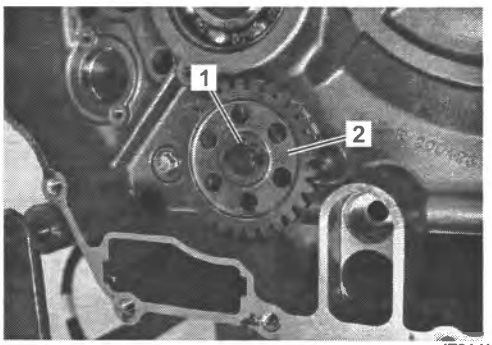

IE31J1140211-01

11) Remove the pin (1) and washer (2).

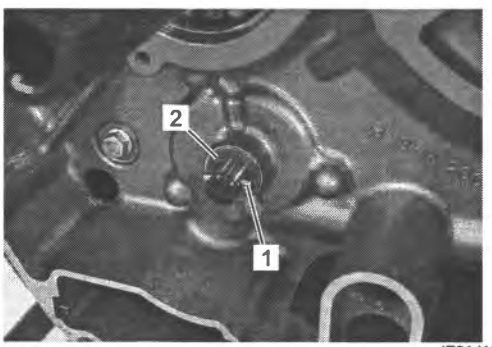

IE31J1140212-02

12) Hold the generator rotor (1) with the special tool and remove the cam drive idle gear/sprocket No. 1 nut (2) and washer (3).

Special tool
(A): 09930–44541

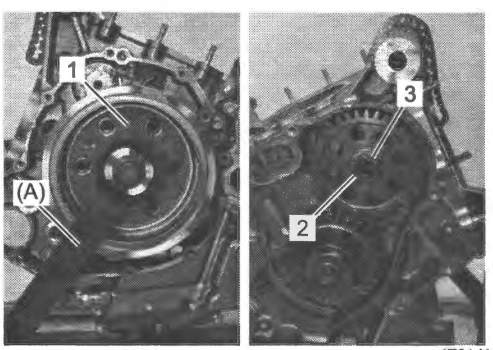

IE31J1140213-01

13) Insert a suitable bar (1) into the holes of primary drive gears to align the teeth of scissors gears.
14) Remove the cam drive idle gear/sprocket No. 1 (2) and cam chain (3).

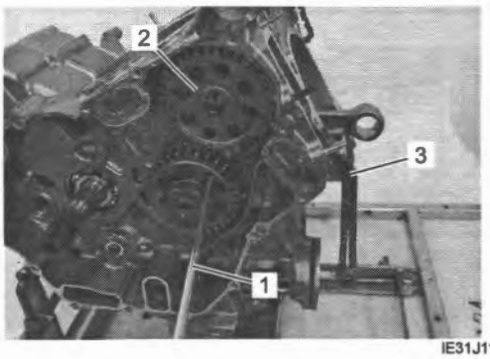

IE31J1140214-01

15) Remove the key (1).

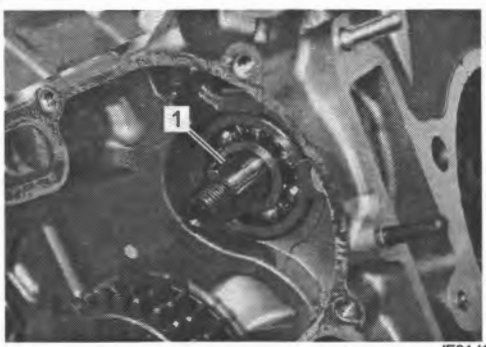

IE31J1140215-02

16) Hold the generator rotor (1) with the special tool and remove the primary drive gear nut (2).

NOTE

This primary drive gear nut (2) has left-hand threads.

Special tool
(A): 09930–44541

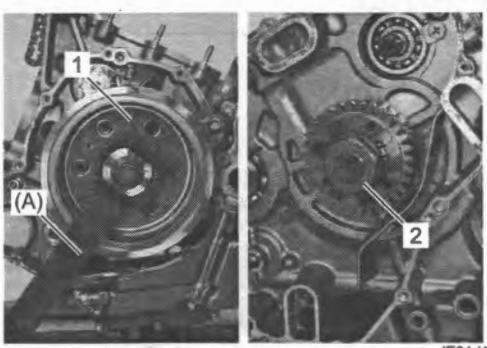

IE31J1140216-01

17) Remove the conical spring washer (1) and primary drive gear assembly (2).

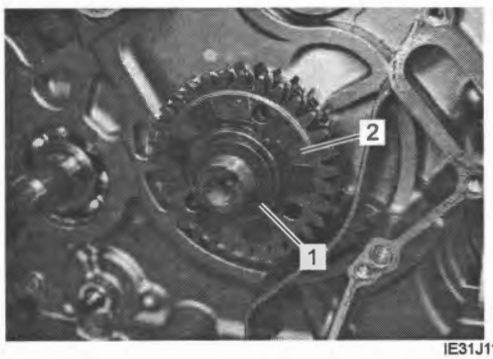

IE31J1140217-01

18) Remove the key (1) and thrust washer (2).

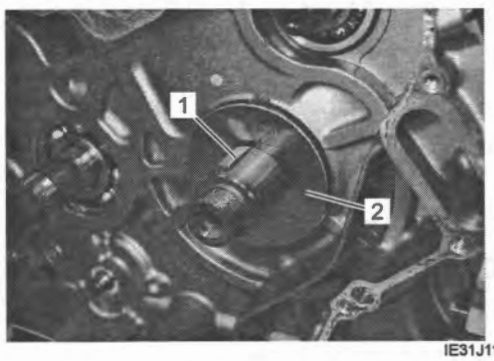

IE31J1140218-01

19) Remove the generator rotor (1). ☞(Page 1J-5)
20) Remove the starter driven gear (2). ☞(Page 1I-9)

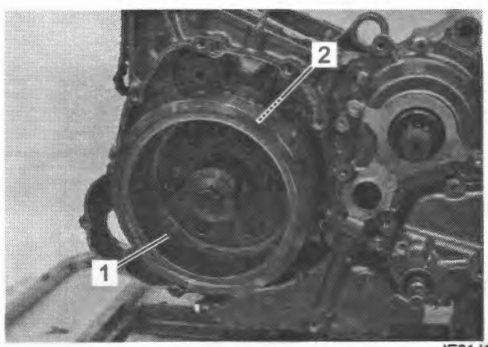

IE31J1140219-01

21) Remove the cam chain (1) and cam drive idle gear shaft (2).

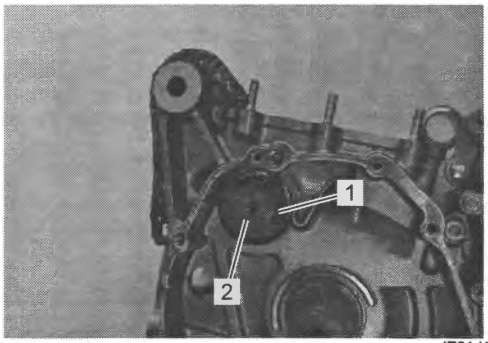

IE31J1140220-01

22) Remove the gearshift cover, gearshift shaft assembly (1), gearshift cam plate (2), gearshift cam stopper (3) and gearshift arm stopper (4). ☞(Page 5B-14)

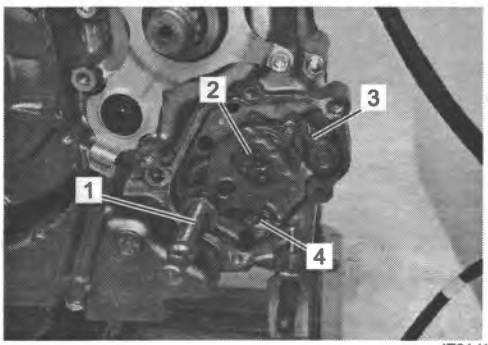

IE31J1140221-01

23) Remove the engine sprocket spacer (1).

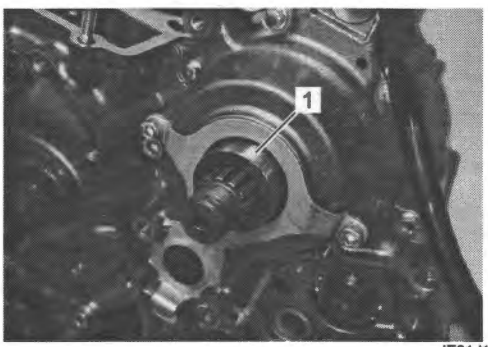

IE31J1140222-01

24) Remove the crankcase bolts (M6) (1) and (M8) (2).

NOTE

Loosen the crankcase bolts diagonally with the smaller size first.

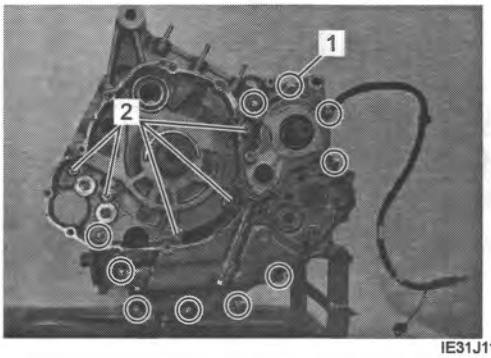

IE31J1140223-02

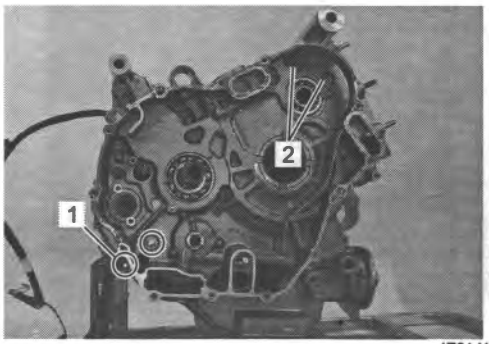

IE31J1140224-01

25) Remove the right crankcase (1) with the special tool.

NOTE

- **Fit the crankcase separating tool, so that the tool arms are in parallel with the side of crankcase.**
- **The crankshaft and transmission components should remain in the left crankcase half.**

Special tool
(A): 09920–13120

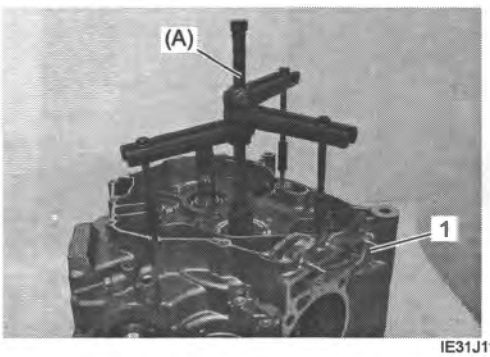

IE31J1140225-01

26) Remove the dowel pins (1) and O-ring (2).

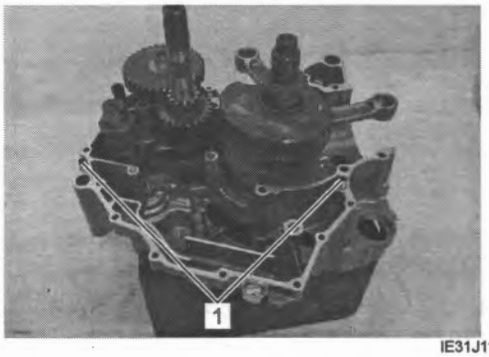

IE31J1140226-01

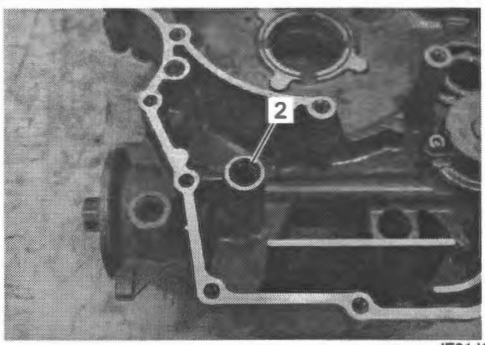

IE31J1140227-02

27) Remove the following parts from the crankcases.
- Crankshaft assembly: ☞(Page 1D-70)
- Transmission component parts: ☞(Page 5B-3)
- Oil pump: ☞(Page 1E-10)
- Left crankcase bearings and oil seals: ☞(Page 1D-73)
- Right crankcase bearing: ☞(Page 1D-74)

Crankcase Assembly Reassembly

BENL06L21406038

Refer to "Piston Removal and Installation" (Page 1D-58) and "Engine Assembly Installation" (Page 1D-25).

1) Install the following parts to the crankcases.
- Right crankcase bearing: ☞(Page 1D-74)
- Left crankcase bearings and oil seals: ☞(Page 1D-73)
- Oil pump: ☞(Page 1E-10)
- Transmission component parts: ☞(Page 5B-3)
- Crankshaft assembly: ☞(Page 1D-70)

2) Apply engine oil to each running and sliding part.

3) Apply molybdenum oil solution to the crankshaft journal bearing.

"A": Assembly lubrication (Molybdenum oil solution)

4) Apply grease to the new O-ring (1) and install it to the right crankcase.

"B": Grease 99000–25011 (SUZUKI SUPER GREASE A)

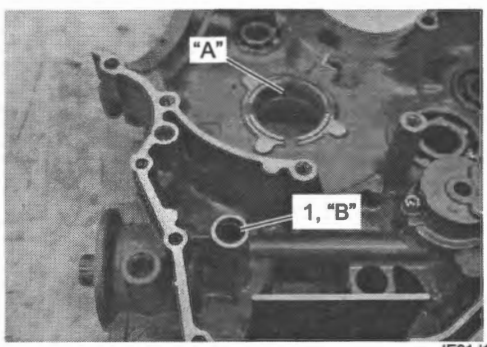

IE31J1140228-02

5) Install the dowel pins (1).

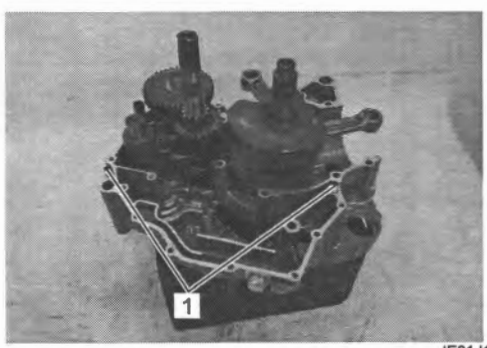

IE31J1140229-01

6) Clean the mating surfaces of the left and right crankcase halves. Apply sealant to the mating surface of the left crankcase.

NOTE

- **Make surfaces free from moisture, oil, dust and other foreign materials.**
- **Spread on surfaces thinly to form an even layer, and assemble the crankcases within few minutes.**
- **Take extreme care not to apply any sealant to the oil hole, oil groove and bearing.**
- **Apply to distorted surfaces as it forms a comparatively thick film.**

"A": Sealant 99000–31110 (SUZUKI BOND 1215)

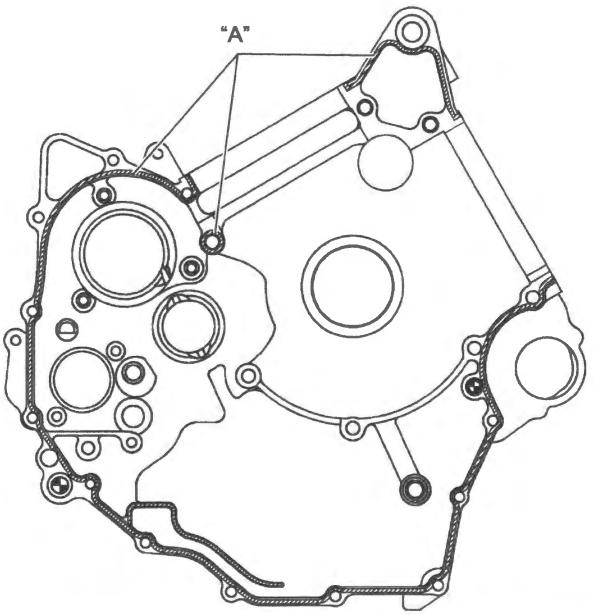

IE31J1140230-01

7) Assemble the right and left crankcase halves.

NOTE

Be careful not to drop the O-ring into the crankcase.

8) Tighten the crankcase bolts a little at a time to equalize the pressure.

NOTE

- **Tighten the larger diameter crankcase bolts first and then smaller ones diagonally and evenly.**
- **Fit the washer (1) to the crankcase bolt.**
- **Tighten the engine ground lead wire (2) by a crankcase bolt.**

Tightening torque
Crankcase bolt (M8) (L110) (a): 26 N·m (2.7 kgf-m, 19.5 lbf-ft)
Crankcase bolt (M8) (L125) (b): 26 N·m (2.7 kgf-m, 19.5 lbf-ft)
Crankcase bolt (M8) (L90) (c): 26 N·m (2.7 kgf-m, 19.5 lbf-ft)
Crankcase bolt (M6) (L85) (d): 11 N·m (1.1 kgf-m, 8.5 lbf-ft)
Crankcase bolt (M6) (L70) (e): 11 N·m (1.1 kgf-m, 8.5 lbf-ft)
Crankcase bolt (M6) (L30) (f): 11 N·m (1.1 kgf-m, 8.5 lbf-ft)

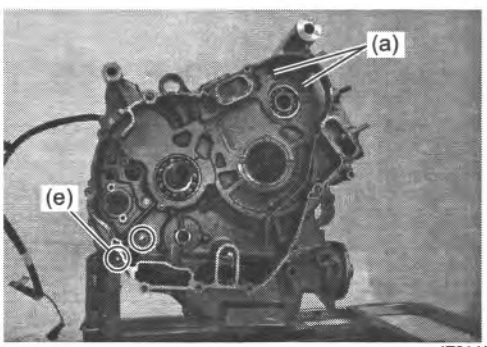

IE31J1140232-01

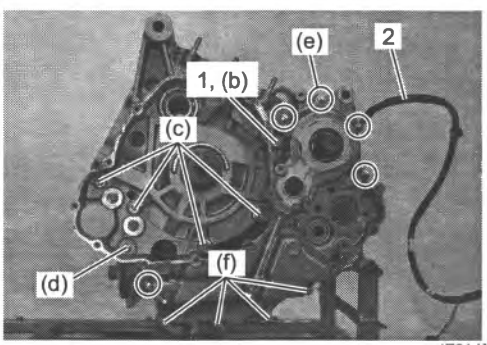

IE31J1140233-02

9) After the crankcase bolts have been tightened, check if the crankshaft, driveshaft and countershaft rotate smoothly.

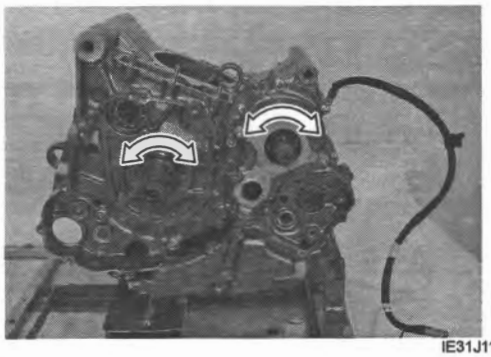

IE31J1140234-01

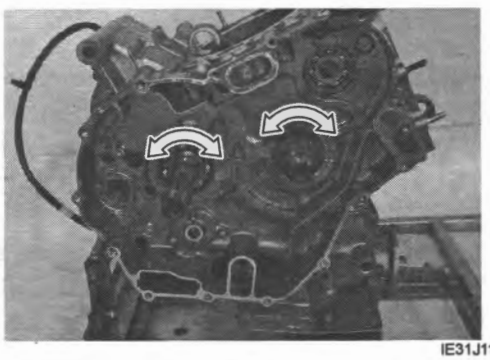

IE31J1140235-01

10) Apply grease to the new O-ring (1) and oil seal lip (2).

"A": Grease 99000–25011 (SUZUKI SUPER GREASE A)

11) Install the engine sprocket spacer (3) onto the driveshaft.

NOTE

The grooved side (4) of the engine sprocket spacer faces crankcase side.

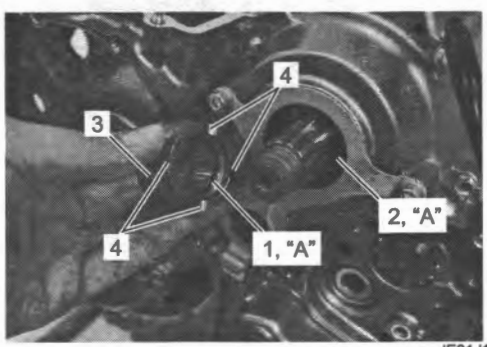

IE31J1140236-02

12) Install the gearshift arm stopper, gearshift cam stopper, gearshift cam plate, gearshift shaft assembly and gearshift cover. ☞(Page 5B-14)

13) Install the cam drive idle gear shaft (1) and cam chain (2).

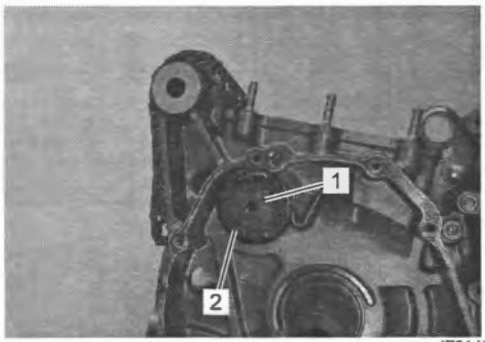

IE31J1140237-01

14) Install the starter driven gear. ☞(Page 1I-9)

15) Install the generator rotor. ☞(Page 1J-7)

16) Install the thrust washer (1) and key (2).

NOTE

The chamfer side (3) of the thrust washer (1) faces the crankcase side.

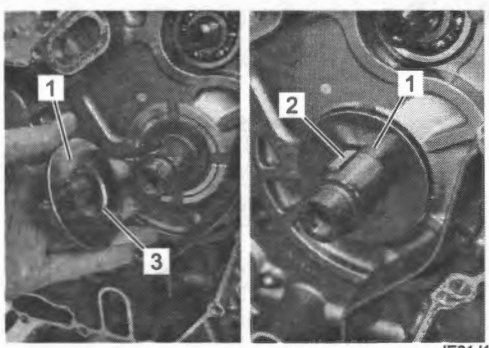

IE31J1140238-03

17) Apply engine oil to primary drive gear nut threads and conical spring washer.

18) Install the primary drive gear assembly (1) and the conical spring washer (2).

NOTE

The conical curve side of the spring washer (2) faces outside.

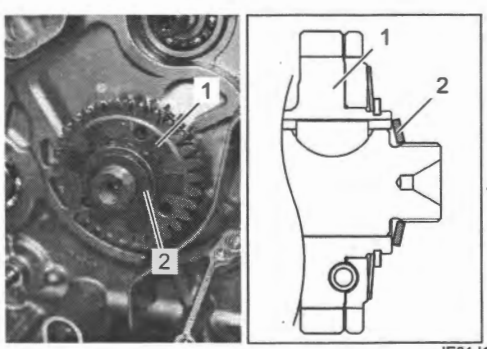

IE31J1140239-02

19) Install the primary drive gear nut (1).

NOTE

The primary drive gear nut (1) has left-hand threads.
The "L" mark (2) on the nut (1) faces outside.

20) Hold the generator rotor (3) with the special tool and tighten the primary drive gear nut (1) to the specified torque.

Special tool
(A): 09930–44541

Tightening torque
Primary drive gear nut (a): 160 N·m (16.3 kgf-m, 118.0 lbf-ft)

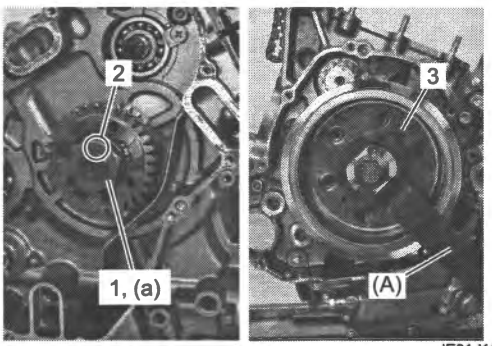

IE31J1140240-02

21) Install the cam chain (1) and key (2).

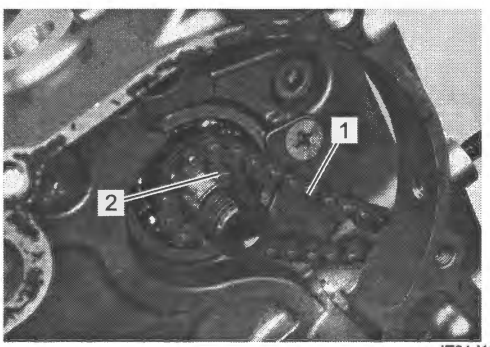

IE31J1140241-02

22) Insert a suitable bar (1) into the holes of primary drive gears and align the teeth of scissors gears.

23) Install the cam drive idle gear/sprocket No. 1 (2).

NOTE

Align the punch marks (3) on the cam drive idle gear/sprocket No. 1 (2) and primary drive gear.

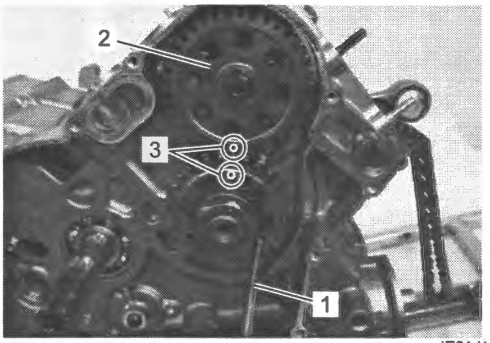

IE31J1140242-02

24) Install the washer (1) and cam drive idle gear/sprocket No. 1 nut (2).

25) Hold the generator rotor (3) with the special tool and tighten the cam drive idle gear/sprocket No. 1 nut (2) to the specified torque.

Special tool
(A): 09930–44541

Tightening torque
Cam drive idle gear/sprocket No. 1 nut (a): 71 N·m (7.2 kgf-m, 52.5 lbf-ft)

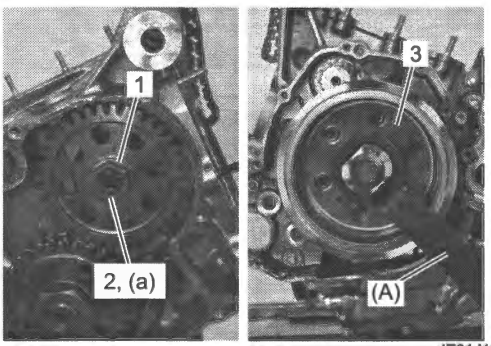

IE31J1140243-02

26) Install the washer (1) and pin (2).
27) Install the oil pump driven gear (3) and new snap ring (4).

NOTE

The boss (5) of the oil pump driven gear (3) faces crankcase side.

Special tool
09900–06107

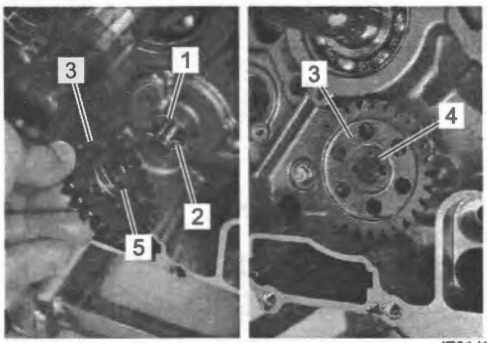

IE31J1140244-03

28) Install the oil pressure regulator and oil strainer. ☞(Page 1E-4)
29) Install the oil pressure switch. ☞(Page 1E-6)
30) Install the GP switch. ☞(Page 5B-12)
31) Install the clutch component parts. ☞(Page 5C-17)
32) Install the clutch cover and water pump case. ☞(Page 5C-17)
33) Install the starter idle gear and starter torque limiter. ☞(Page 1I-9)
34) Install the generator cover. ☞(Page 1J-7)
35) Install the oil filter. ☞(Page 1E-4)
36) Install the starter motor assembly. ☞(Page 1I-5)

Crankshaft Assembly Removal and Installation

BENL06L21406039

Refer to "Crankcase Assembly Disassembly" (Page 1D-62) and "Crankcase Assembly Reassembly" (Page 1D-66).

Removal

Remove the crankshaft assembly (1).

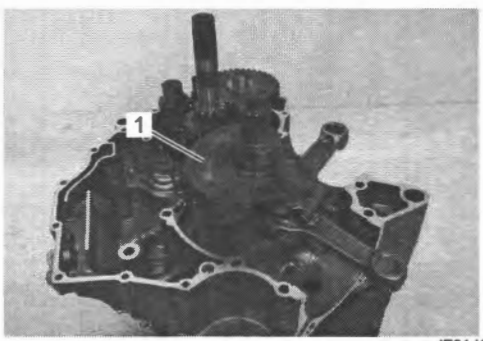

IE31J1140245-02

Installation

1) Apply engine oil to the crankshaft journals (1).

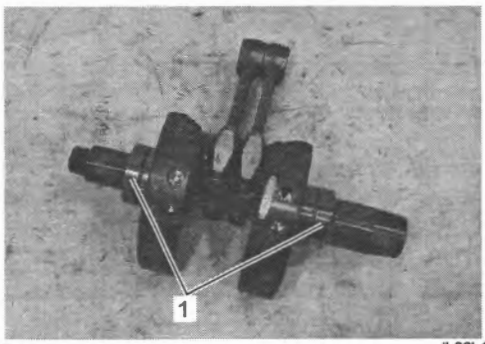

IL06L1140090-02

2) Install the crankshaft assembly (1) into the left crankcase.

NOTICE

Never strike the crankshaft assembly (1) with a hammer when inserting it into the crankcase.

NOTE

- **Be sure to set the crankshaft assembly (1) in the proper direction.**
- **Of the two conrods, the one with the embossed letter (2) marked should be brought to the rear cylinder.**

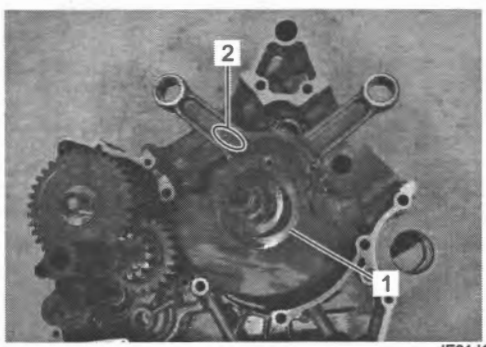

IE31J1140247-01

Crankshaft Journal Bearing Removal and Installation

BENL06L21406040

Refer to "Crankshaft Assembly Removal and Installation" (Page 1D-70) and "Transmission Removal and Installation" in Section 5B (Page 5B-3).

Removal

1) Set the special tool as shown to remove the crankshaft journal bearings (1) with the special tool.

NOTE

Remove the crankshaft journal bearings in only one direction, from inside to outside of each crankcase half.

Special tool
(A): 09913–60230

2) Gradually press out the journal bearings with the special tool by using the hydraulic press.

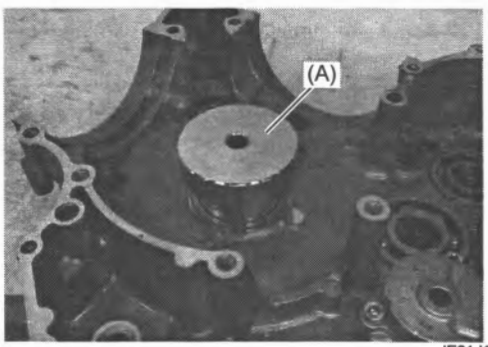

IE31J1140248-01

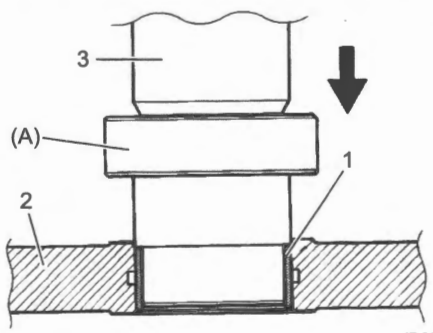

ID26J1140177-03

1. Journal bearing	3. Hydraulic press
2. Crankcase	

NOTE

Using a hydraulic press is recommended to remove the crankshaft journal bearings. However, the crankshaft journal bearings can be removed by using the following special tools.

Special tool
(A): 09913–60230
(B): 09924–84510
(C): 09924–74570

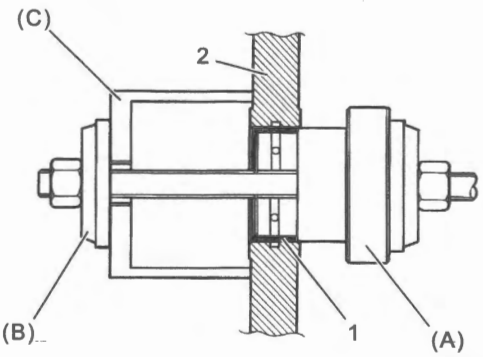

ID26J1140178-01

1. Journal bearing	2. Crankcase

3) Do the same for the other bearings.

Installation

1) Apply engine oil to the inside surface of the special tool before fitting the bearing (1) in the special tool.

Special tool
(A): 09913–60241

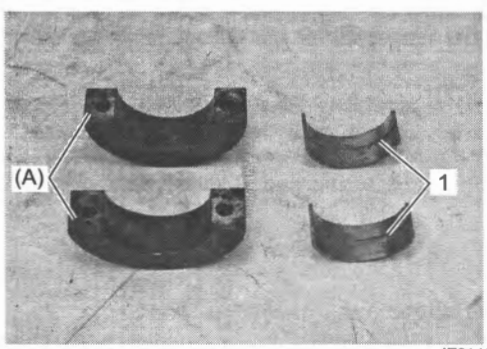

IE31J1140249-01

2) When setting the bearing into the special tool, align the side edge of the bearing with the line (1) engraved inside the tool and the end of the bearing with the mating surface (2) of the tool as well.

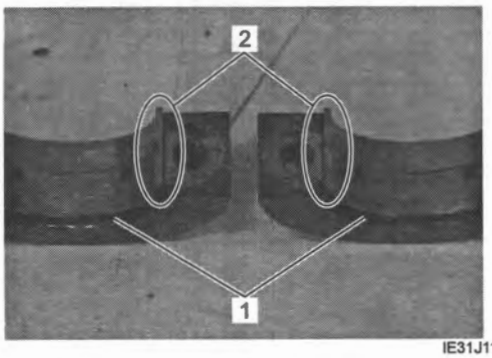

IE31J1140250-01

3) Combine the special tool and tighten the bolts to the specified torque.

Tightening torque
Special tool bolt (a): 23 N·m (2.3 kgf-m, 17.0 lbf-ft)

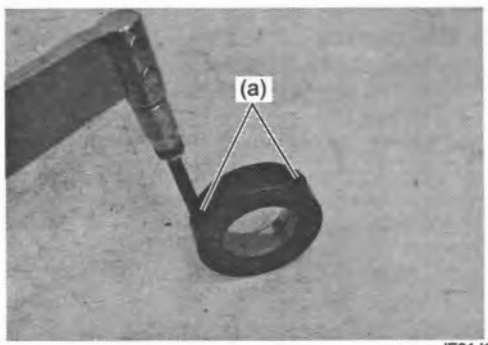

IE31J1140251-01

4) Before installing the bearings, lightly shave off the sharp edge part (1) of the crankcase chamfer by using an oilstone.

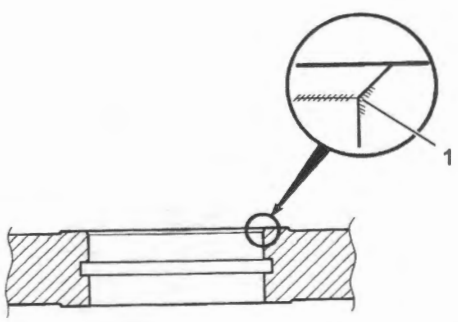

ID26J1140181-07

5) Apply engine oil to the inside surface of the crankcase.

6) Set the bearings installed in the special tool to the crankcase half as shown.

NOTICE

- **Be sure the bearing protruded side (1) faces the crankcase bore.**
- **Align the bearing/special tool mating surface (2) with the line (3) on the crankcase.**

NOTE

Install the bearing from inside to outside of each crankcase half.

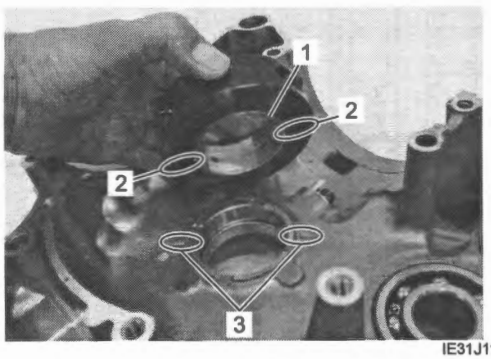

IE31J1140252-01

7) Apply enough engine oil to the special tool and the bearings and then set the special tool carefully.

Special tool
(A): 09913–60241
(B): 09913–60230

8) Press fit the bearing gradually using a hydraulic press.

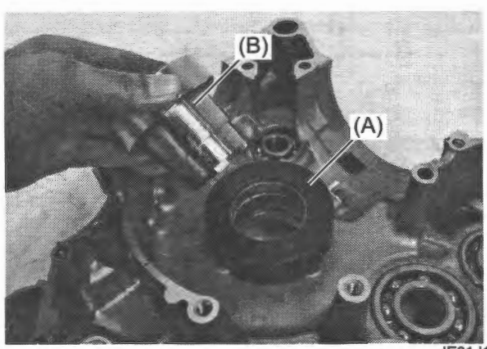

IE31J1140253-01

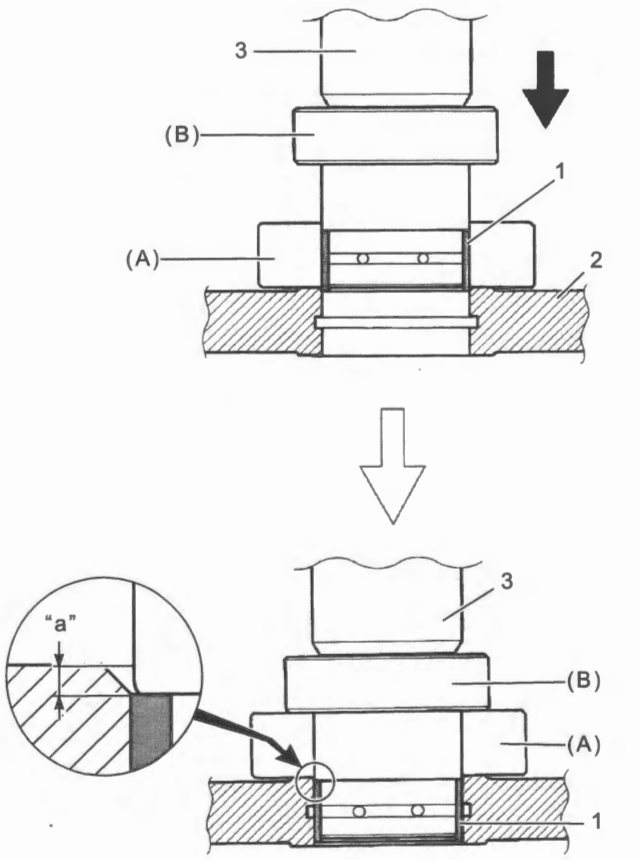

ID26J1140270-01

1. Journal bearing	3. Hydraulic press
2. Crankcase	"a": 2.2 mm (0.087 in)

NOTICE

Using a hydraulic press is recommended to install the crankshaft journal bearings. However, the crankshaft journal bearings can be installed by using the following special tools.

Special tool
(C): 09941–34513
(D): 09924–74570

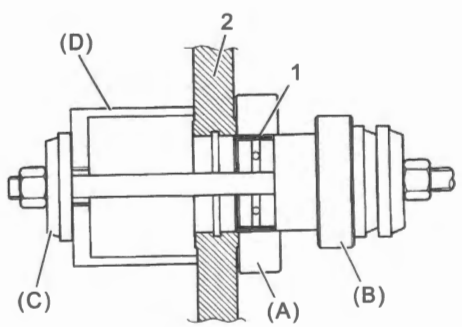

ID26J1140271-04

1. Journal bearing	2. Crankcase

9) After installing the bearings (1), check the bearing surface for any scratch or damage.

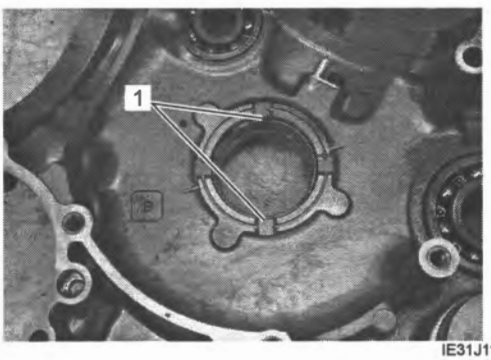

IE31J1140254-01

10) Do the same for the other bearings.

Left Crankcase Disassembly and Reassembly

BENL06L21406041

Refer to "Crankshaft Assembly Removal and Installation" (Page 1D-70) and "Transmission Removal and Installation" in Section 5B (Page 5B-3).

Disassembly

1) Remove the countershaft bearing (1), driveshaft bearing (2) and gearshift cam bearing (3). ☞(Page 5B-8)

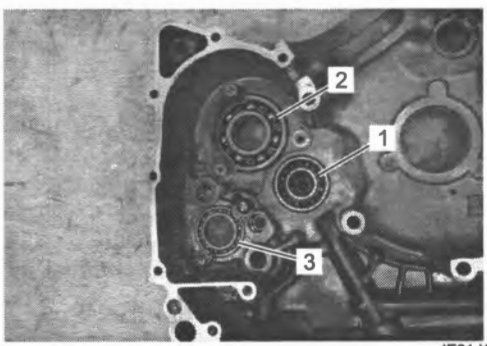

IE31J1140255-01

2) Remove the oil drain plug (1) and oil gallery plugs (M8) (2).

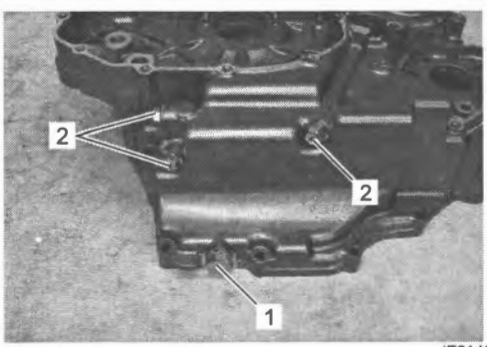

IE31J1140256-01

3) Remove the jets (1) and piston cooling nozzle (2). ☞(Page 1E-7)

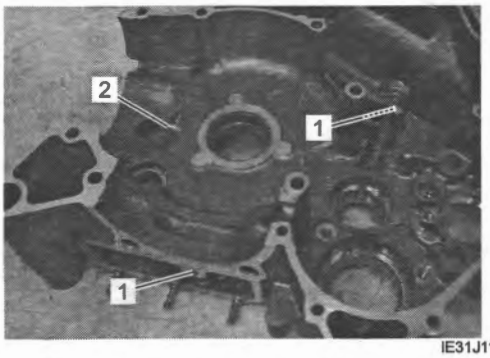

IE31J1140257-01

4) Remove the cam drive idle gear shaft bearing (1) using the special tool.

Special tool
(A): 09913–70210

5) Remove the crankshaft journal bearings (2). ☞(Page 1D-71)

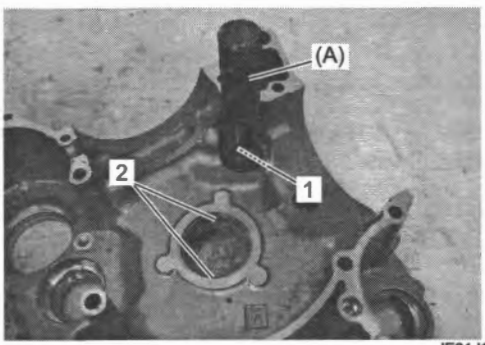

IE31J1140258-01

Reassembly

1) Install the new crankshaft journal bearings (1). ☞(Page 1D-71)
2) Apply engine oil to the new cam drive idle gear shaft bearing (2).
3) Install the cam drive idle gear shaft bearing (2) using the special tool.

Special tool
(A): 09913–70210

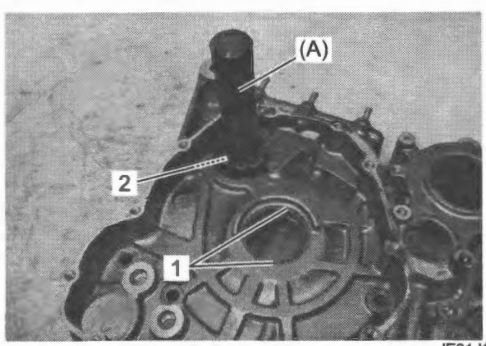

IE31J1140259-01

4) Install the piston cooling nozzle and oil jets. ☞(Page 1E-7)
5) Install the oil gallery plugs (M8) and oil drain plug with new gasket washers and tighten each plug to the specified torque.

Tightening torque
Oil gallery plug (M8) (a): 18 N·m (1.8 kgf-m, 13.5 lbf-ft)
Oil drain plug (b): 23 N·m (2.3 kgf-m, 17.0 lbf-ft)

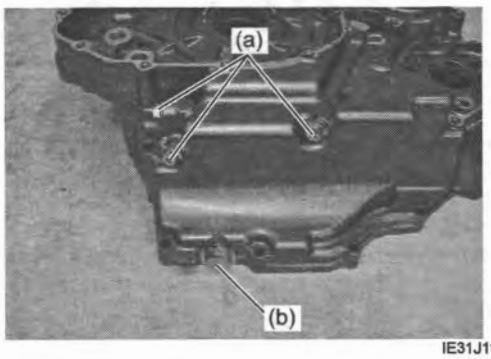

IE31J1140260-01

6) Install the gearshift cam bearing, new driveshaft bearing, new countershaft bearing, new clutch push rod oil seal, new driveshaft oil seal, oil seal retainer. ☞(Page 5B-8)

Right Crankcase Disassembly and Reassembly

BENL06L21406042

Refer to "Crankcase Assembly Disassembly" (Page 1D-62) and "Crankcase Assembly Reassembly" (Page 1D-66).

Disassembly

1) Remove the countershaft bearing (1) and driveshaft bearing (2). ☞(Page 5B-10)
2) Remove the oil pump (3). ☞(Page 1E-10)

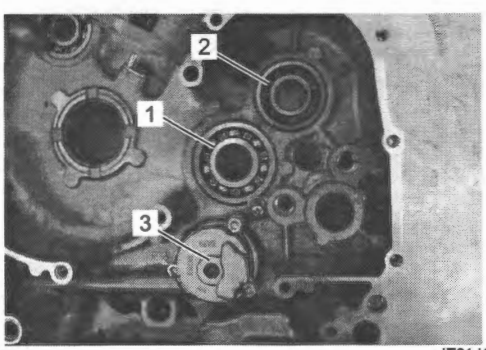

IE31J1140261-01

3) Remove the oil gallery plugs (M8) (1) and (M16) (2).

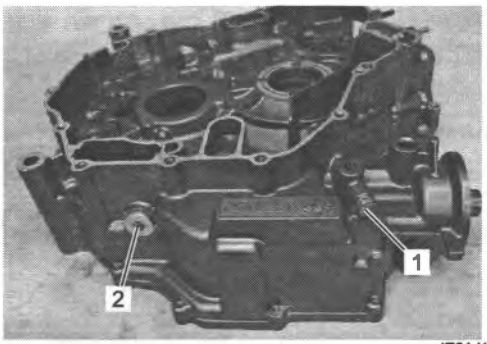

IE31J1140262-01

4) Remove the oil jet (1) and piston cooling nozzle (2). ☞(Page 1E-7)

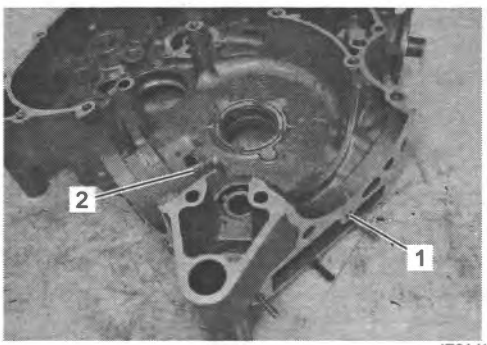

IE31J1140263-01

5) Remove the bearing retainer (1).

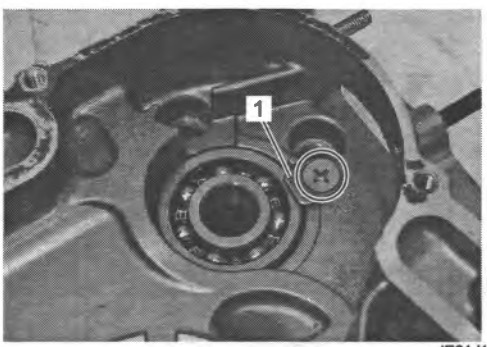

IE31J1140291-02

6) Remove the cam drive idle gear shaft bearing (1) using the special tool.

Special tool
(A): 09913–70210

7) Remove the crankshaft journal bearings (2). ☞(Page 1D-71)

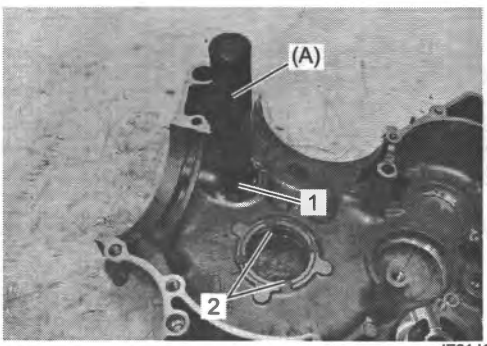

IE31J1140264-01

Reassembly

1) Install the new crankshaft journal bearing (1). ☞(Page 1D-71)
2) Apply engine oil to the new cam drive idle gear shaft bearing (2).
3) Install the cam drive idle gear shaft bearing (2) using the special tool.

Special tool
(A): 09913–70210

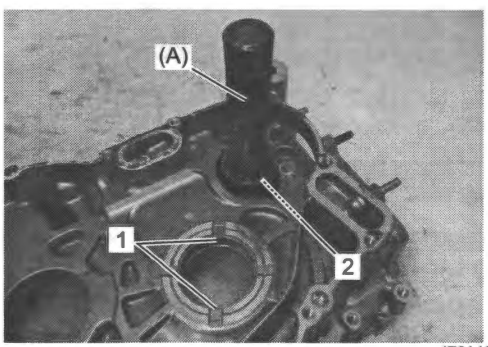

IE31J1140265-02

4) Apply thread lock to the bearing retainer screw (1).

"A": Thread lock cement 99000–32150 (THREAD LOCK CEMENT 1322D)

5) Install the bearing retainer (2) and tighten its screw (1) to the specified torque.

Tightening torque
Cam drive idle gear shaft bearing retainer screw (a): 8.4 N·m (0.86 kgf-m, 6.20 lbf-ft)

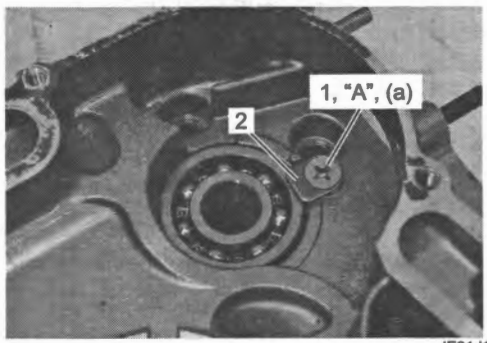

IE31J1140266-02

6) Install the piston cooling nozzle and oil jet. ☞(Page 1E-7)

7) Install the oil gallery plugs with new gasket washers and tighten each plug to the specified torque.

Tightening torque
Oil gallery plug (M8) (a): 18 N·m (1.8 kgf-m, 13.5 lbf-ft)
Oil gallery plug (M16) (b): 35 N·m (3.6 kgf-m, 26.0 lbf-ft)

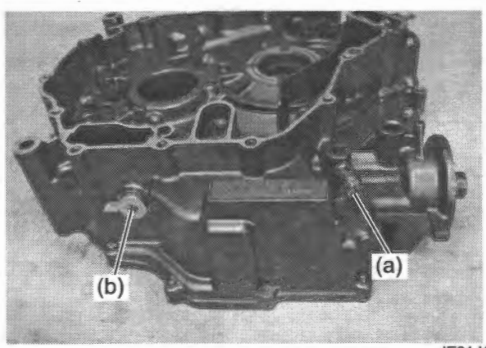

IE31J1140267-01

8) Install the oil pump. ☞(Page 1E-10)

9) Install the new driveshaft bearing and new countershaft bearing. ☞(Page 5B-10)

Crankcase Bearing / Oil Seal Inspection

BENL06L21406043

Refer to "Crankshaft Assembly Removal and Installation" (Page 1D-70) and "Transmission Removal and Installation" in Section 5B (Page 5B-3).

Bearing

Inspect the play of the bearing by hand while it is in the crankcase. Rotate the inner race by hand to inspect for abnormal noise and smooth rotation. Replace the bearing if there is anything unusual. Refer to "Left Crankcase Disassembly and Reassembly" (Page 1D-73) and "Right Crankcase Disassembly and Reassembly" (Page 1D-74).

NOTE

If abnormal noise does not occur, it is not necessary to remove the bearing.

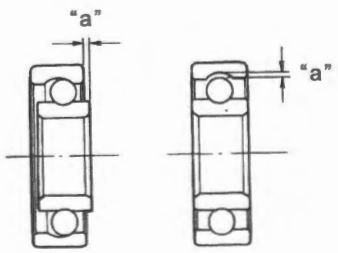

IE31J1140298-01

"a": Play

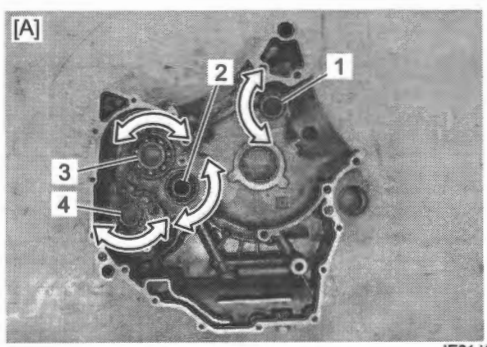

IE31J1140268-02

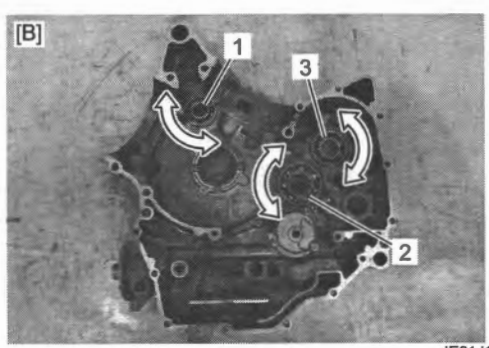

IE31J1140269-02

[A]: Left crankcase	2. Countershaft bearing
[B]: Right crankcase	3. Driveshaft bearing
1. Cam drive idle gear shaft bearing	4. Gearshift cam bearing

Oil Seal

Inspect oil seal lip for wear or damage. If any defects are found, replace the oil seal with a new one. ☞(Page 5B-8)

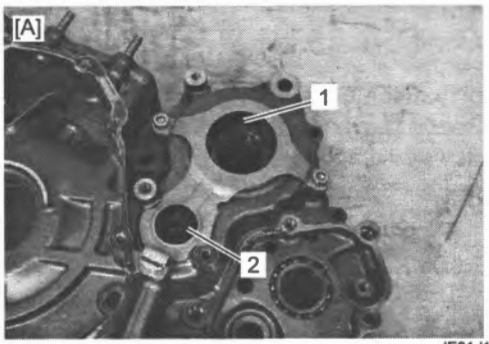

IE31J1140270-01

[A]: Left crankcase	2. Clutch push rod oil seal
1. Driveshaft oil seal	

Conrod Removal and Installation

BENL06L21406044

Refer to "Crankshaft Assembly Removal and Installation" (Page 1D-70).

Removal

1) Loosen the conrod cap bolts, and tap the conrod cap bolts lightly with plastic hammer to remove the conrod cap.
2) Remove the conrods and mark them to identify their respective cylinders.

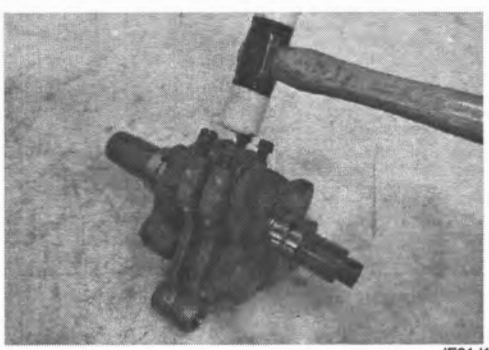

IE31J1140271-01

3) Remove the bearings (1).

NOTICE

When removing the bearings, be careful not to scratch the conrods and the bearings.

NOTE

- **Do not remove the bearings (1) unless absolutely necessary.**
- **Make a note of where the bearings are removed from so that they can be reinstalled in their original positions.**

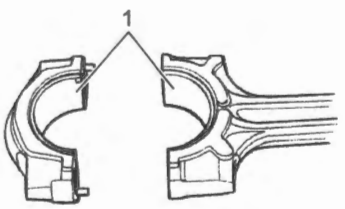

ID26J1140264-01

Installation

1) When installing the bearings into the conrod cap and conrod, be sure to fix the stopper part (1) first, and then press in the opposite side of the bearing.

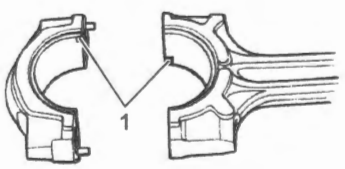

ID26J1140277-03

2) Clean the conrod big end and apply engine oil to the crank pin and bearing surface (1).

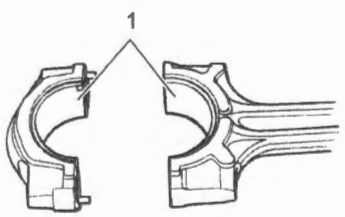

IL06L1140092-02

3) When fitting the conrod cap, make sure that I.D. code (1) on each conrod faces intake side and that embossed lettering (2) on each conrod faces outside.

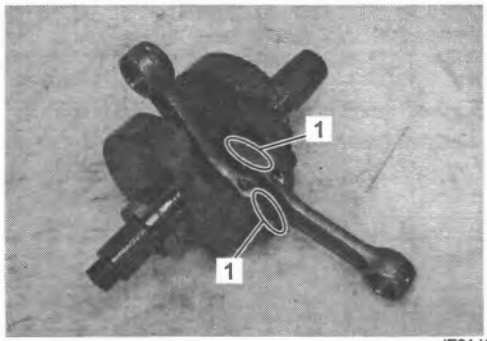

IE31J1140272-01

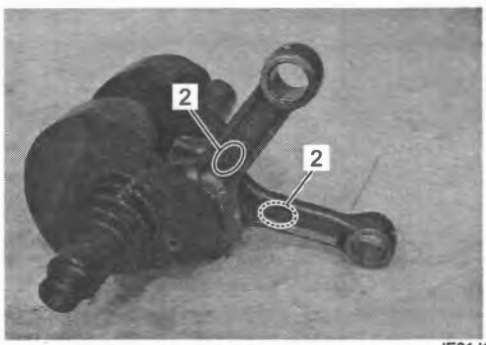

IE31J1140273-01

4) Apply engine oil to the flange and thread portion of the conrod cap bolts.

5) Tighten the conrod cap bolts as following two steps.

Tightening torque
Conrod cap bolt: 34 N·m (3.5 kgf-m, 25.0 lbf-ft) → turn clockwise 90°

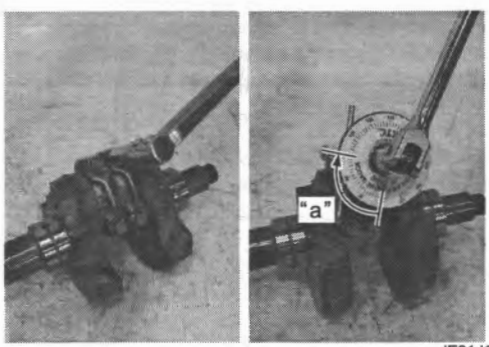

IE31J1140274-02

"a": 90°

6) Apply engine oil to the conrod big end side surfaces (1).

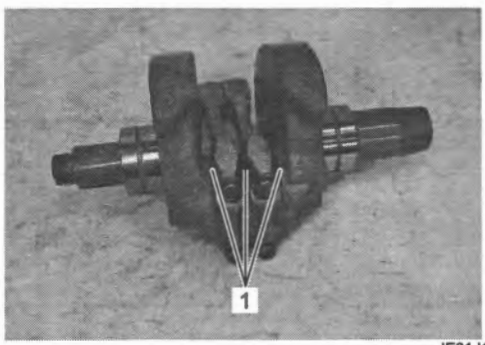

IE31J1140275-01

7) Check that the conrod moves smoothly.

Conrod / Crankshaft Inspection

BENL06L21406045

Refer to "Conrod Removal and Installation" (Page 1D-77).

Conrod Small End I.D.
Measure the conrod small end inside diameter with the small bore gauge.
If the conrod small end inside diameter exceeds the service limit, replace the conrod.

Special tool
(A): 09900–20602
(B): 09900–22403

Conrod small end I.D.
[Limit]: 22.040 mm (0.8677 in)

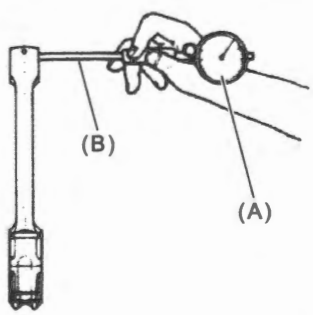

ID26J1140219-01

Conrod Big End Side Clearance

1) Check the conrod big end side clearance with thickness gauge.

Special tool
(A): 09900–20803

Conrod big end side clearance
[Limit]: 0.50 mm (0.019 in)

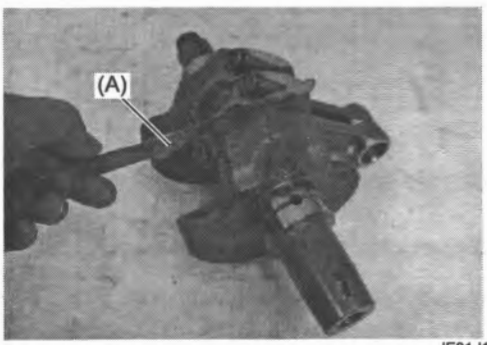

IE31J1140276-01

2) If the clearance exceeds the limit, remove the conrod and measure the conrod big end width and crank pin width. If the width exceed the limit, replace the conrod or crankshaft.

Special tool
(A): 09912–66310
09900–20101

Conrod big end width
Standard: 21.95 – 22.00 mm (0.864 – 0.866 in)

Crank pin width "a"
Standard: 44.17 – 44.22 mm (1.739 – 1.741 in)

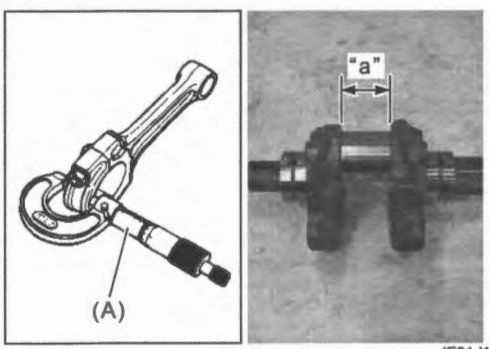

IE31J1140277-01

Conrod Crank Pin Bearing Inspection and Selection

BENL06L21406046

Refer to "Conrod Removal and Installation" (Page 1D-77).

Inspection

1) Inspect the bearing surfaces for any signs of fusion, pitting, burn or flaws. If any, replace them with a specified set of bearings.

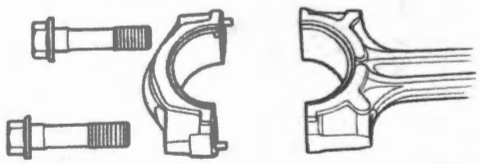

I718H1140285-01

2) Place the plastigage axially along the crank pin, avoiding the oil hole, as shown.

Special tool
(A): 09900–22301

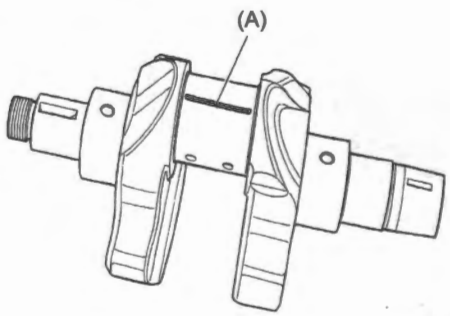

IE31J1140278-02

3) Tighten the conrod cap bolts to the specified torque, in two stages.

NOTE

- **When installing the conrod cap to the crank pin, make sure that I.D code (1) on the conrod faces towards the intake side.**
- **Never rotate the crankshaft or conrod when a piece of plastigage is installed.**

Tightening torque
Conrod cap bolt (a): 34 N·m (3.5 kgf-m, 25.0 lbf-ft) → turn clockwise 90°

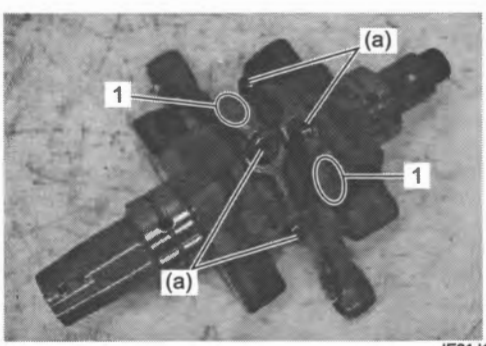

IE31J1140279-02

4) Remove the conrod caps and measure the width of the compressed plastigage using the envelope scale. This measurement should be taken at the widest part of the compressed plastigage.
If the oil clearance exceeds the service limit, select the specified bearings from the bearing selection table.

Conrod big end oil clearance
[Standard]: 0.032 – 0.056 mm (0.0013 – 0.0022 in)
[limit]: 0.080 mm (0.0031 in)

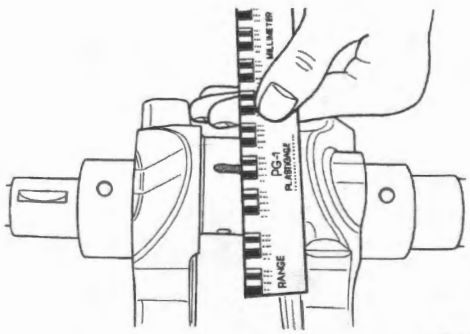

IE31J1140280-01

Selection

1) Check the corresponding conrod I.D. code numbers ([1] or [2]) (1).

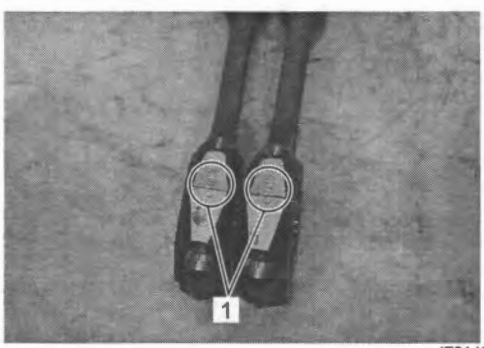

IE31J1140281-01

Conrod I.D. specification

Code (1)	I.D. specification
1	48.000 – 48.008 mm (1.8898 – 1.8901 in)
2	48.008 – 48.016 mm (1.8901 – 1.8904 in)

2) Check the corresponding crank pin O.D. code numbers ([1], [2] or [3]) (1).

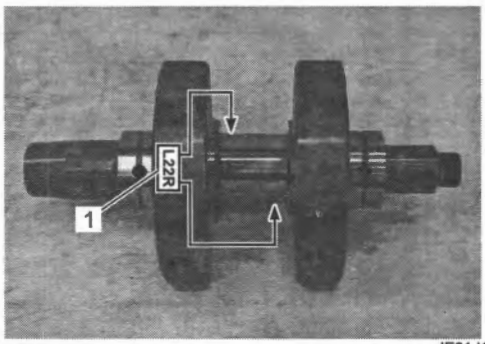

IE31J1140282-02

3) Measure the conrod crank pin O.D. with the special tool. If any of the measurements are out of specification, replace the crankshaft.

NOTE

The crank pin O.D. measurement should be taken at 11 mm (0.4 in) and 33 mm (1.3 in) positions from the crank pin end.

Crank pin O.D. specification

Code (2)	O.D. specification
1	44.992 – 45.000 mm (1.7713 – 1.7717 in)
2	44.984 – 44.992 mm (1.7710 – 1.7713 in)
3	44.976 – 44.984 mm (1.7707 – 1.7710 in)

Special tool
(A): 09900–20202

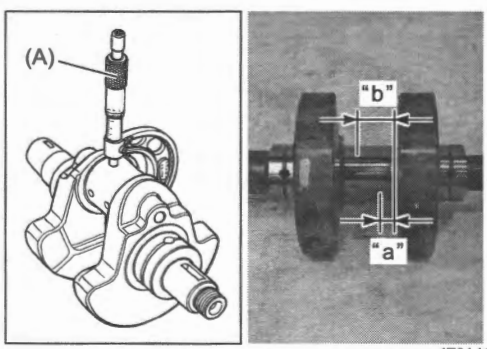

IE31J1140283-01

"a": 11 mm (0.4 in)	"b": 33 mm (1.3 in)

4) Select the specified bearings from the bearing selection table.

NOTICE

The bearings should be replaced as a set.

Bearing selection table

		Crank pin O.D. (2)		
	Code	1	2	3
Conrod I.D. (1)	1	Green	Black	Brown
	2	Black	Brown	Yellow

ID26J1140288-01

Bearing thickness specification

Color (3) (Part No.)	Thickness
Green (12164-31J00-0A0)	1.480 – 1.484 mm (0.0583 – 0.0584 in)
Black (12164-31J00-0B0)	1.484 – 1.488 mm (0.0584 – 0.0586 in)
Brown (12164-31J00-0C0)	1.488 – 1.492 mm (0.0586 – 0.0587 in)
Yellow (12164-31J00-0D0)	1.492 – 1.496 mm (0.0587 – 0.0589 in)

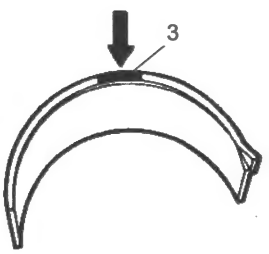

ID26J1140279-03

3. Color code

Crankshaft Journal Bearing Inspection and Selection

BENL06L21406047

Refer to "Crankshaft Assembly Removal and Installation" (Page 1D-70) and "Transmission Removal and Installation" in Section 5B (Page 5B-3).

Inspection

1) Inspect the crankshaft journal bearings (1) and crankshaft journals (2) on right and left for any damage. If any, replace the bearings and crankshaft as a specified set.

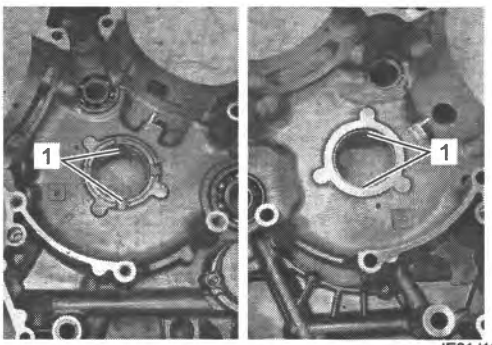

IE31J1140284-01

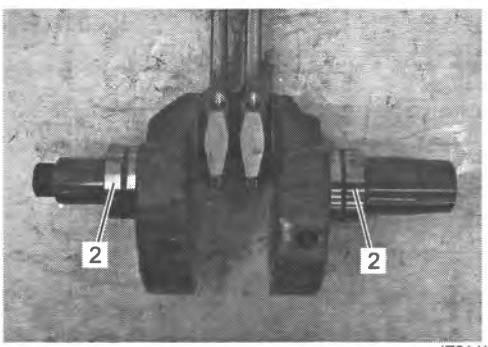

IE31J1140285-01

2) Measure the crankshaft O.D. with the special tool. If any of the measurements are out of specification, replace the crankshaft and bearings as a set.

Special tool
(A): 09900–20202

Crankshaft journal O.D.
[Standard]: 47.985 – 48.000 mm (1.8892 – 1.8898 in)

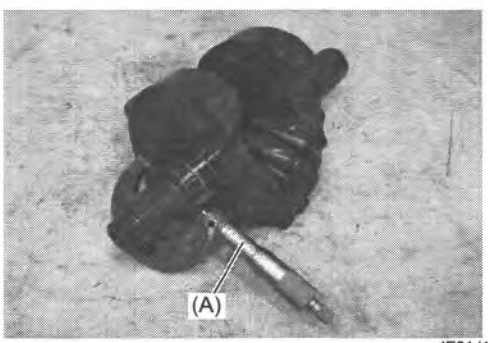

IE31J1140286-01

Selection

1) Select the specified bearings from the crankcase journal I.D. codes. The crankcase journal I.D. codes ((A), (B) or (C)) (1), is stamped on the inside of each crankcase half.

NOTICE

The bearings should be replaced as a set.

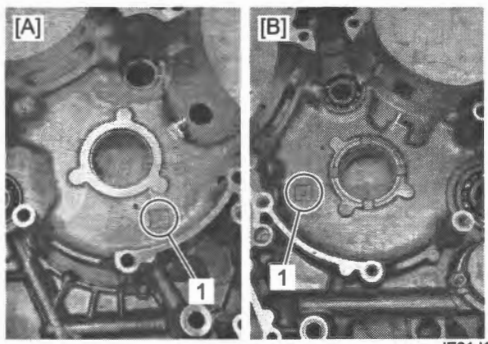

IE31J1140287-01

[A]: Left crankcase	[B]: Right crankcase

Crankcase journal I.D. specification

Code (1)	I.D. specification	Bearing color
A	52.000 – 52.006 mm (2.0472 – 2.0475 in)	Green
B	52.006 – 52.012 mm (2.0475 – 2.0477 in)	Black
C	52.012 – 52.018 mm (2.0477 – 2.0479 in)	Brown

Bearing thickness specification

Color (2) (Part No.)	Thickness
Green (12229-31J00-0A0) (12229-06L00-0A0)	1.999 – 2.002 mm (0.0787 – 0.0788 in)
Black (12229-31J00-0B0) (12229-06L00-0B0)	2.002 – 2.005 mm (0.0788 – 0.0789 in)
Brown (12229-31J00-0C0) (12229-06L00-0C0)	2.005 – 2.008 mm (0.0789 – 0.0791 in)

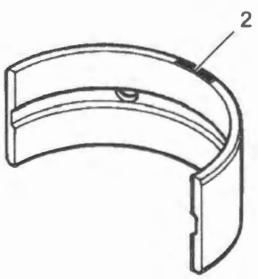

IE31J1140288-01

2. Color code

Specifications

Tightening Torque Specifications

BENL06L21407001

Fastening part	Tightening torque			Note
	N·m	kgf-m	lbf-ft	
Air cleaner outlet tube clamp screw	1.5	0.15	1.10	☞(Page 1D-7)
Injector screw	3.5	0.36	2.60	☞(Page 1D-8)
Bracket bolt	10	1.0	7.5	☞(Page 1D-8)
Intake pipe clamp screw	1.5	0.15	1.10	☞(Page 1D-9)
EVAP system purge control solenoid valve nut	6.7	0.68	4.95	☞(Page 1D-9)
Intake pipe mounting screw	8.4	0.86	6.20	☞(Page 1D-10)
Cylinder head cover bolt	14	1.4	10.5	☞(Page 1D-13)
Camshaft journal holder bolt	10	1.0	7.5	☞(Page 1D-16) / ☞(Page 1D-18)
Generator cover plug	15	1.5	11.0	☞(Page 1D-20)
Valve timing inspection plug	20	2.0	15.0	☞(Page 1D-20)
EVAP canister bracket bolt	10	1.0	7.5	☞(Page 1D-20)
Engine mounting thrust adjuster	12	1.2	9.0	☞(Page 1D-26)
Engine mounting thrust adjuster lock-nut	45	4.6	33.5	☞(Page 1D-26)
Engine mounting pinch bolt	23	2.3	17.0	☞(Page 1D-29)
Front footrest bracket bolt	26	2.7	19.5	☞(Page 1D-29)
Cylinder head bolt (M10)	25 → 46 N·m (2.5 → 4.7 kgf-m, 18.5 → 34.0 lbf-ft)			☞(Page 1D-39)
Cylinder head nut (M8)	25	2.5	18.5	☞(Page 1D-39)
Cylinder head nut (M6)	10	1.0	7.5	☞(Page 1D-39)
Cylinder head bolt (M6)	10	1.0	7.5	☞(Page 1D-39)
Cylinder nut	10	1.0	7.5	☞(Page 1D-39)
Cam chain tensioner mounting bolt	10	1.0	7.5	☞(Page 1D-40)
Cylinder head cover No. 2 bolt	10	1.0	7.5	☞(Page 1D-42)
Cam chain tension adjuster mounting bolt	10	1.0	7.5	☞(Page 1D-43) / ☞(Page 1D-44)
Cam chain tension adjuster cap bolt (Front)	23	2.3	17.0	☞(Page 1D-43)
Cam chain tension adjuster cap bolt (Rear)	7	0.71	5.20	☞(Page 1D-44)
Water union bolt	10	1.0	7.5	☞(Page 1D-53)
Oil gallery plug (M6)	10	1.0	7.5	☞(Page 1D-53)
Crankcase bolt (M8) (L110)	26	2.7	19.5	☞(Page 1D-67)
Crankcase bolt (M8) (L125)	26	2.7	19.5	☞(Page 1D-67)
Crankcase bolt (M8) (L90)	26	2.7	19.5	☞(Page 1D-67)
Crankcase bolt (M6) (L85)	11	1.1	8.5	☞(Page 1D-67)
Crankcase bolt (M6) (L70)	11	1.1	8.5	☞(Page 1D-67)
Crankcase bolt (M6) (L30)	11	1.1	8.5	☞(Page 1D-67)
Primary drive gear nut	160	16.3	118.0	☞(Page 1D-69)
Cam drive idle gear/sprocket No. 1 nut	71	7.2	52.5	☞(Page 1D-69)
Special tool bolt	23	2.3	17.0	☞(Page 1D-72)
Oil gallery plug (M8)	18	1.8	13.5	☞(Page 1D-74) / ☞(Page 1D-76)
Oil drain plug	23	2.3	17.0	☞(Page 1D-74)
Cam drive idle gear shaft bearing retainer screw	8.4	0.86	6.20	☞(Page 1D-76)
Oil gallery plug (M16)	35	3.6	26.0	☞(Page 1D-76)
Conrod cap bolt	34 N·m (3.5 kgf-m, 25.0 lbf-ft) → turn clockwise 90°			☞(Page 1D-78) / ☞(Page 1D-79)

Reference:
For the tightening torques of fasteners not specified in this page, refer to:
"Intake System Components" (Page 1D-3)
"Cylinder Head Cover/Camshaft Components" (Page 1D-11)
"Engine Assembly Installation" (Page 1D-25)
"Cam Chain Tension Adjuster / Cam Chain Tensioner / Cylinder Head Assembly / Cam Chain Guide / Cylinder Components" (Page 1D-30)
"Fasteners Information" in Section 0C (Page 0C-10)

Special Tools and Equipment

Recommended Service Material

BENL06L21408001

Material	SUZUKI recommended product or Specification		Note
Assembly lubrication	Molybdenum oil solution	—	☞(Page 1D-37) / ☞(Page 1D-49) / ☞(Page 1D-58) / ☞(Page 1D-66)
Grease	SUZUKI SUPER GREASE A	P/No.: 99000–25011	☞(Page 1D-10) / ☞(Page 1D-42) / ☞(Page 1D-44) / ☞(Page 1D-66) / ☞(Page 1D-68)
Sealant	SUZUKI BOND 1215	P/No.: 99000–31110	☞(Page 1D-36) / ☞(Page 1D-67)
	SUZUKI BOND 1207B	P/No.: 99000–31140	☞(Page 1D-12)
Thread lock cement	THREAD LOCK CEMENT 1322D	P/No.: 99000–32150	☞(Page 1D-29) / ☞(Page 1D-42) / ☞(Page 1D-76)

NOTE

Required service material(s) is also described in:
"Cylinder Head Cover/Camshaft Components" (Page 1D-11)
"Cam Chain Tension Adjuster / Cam Chain Tensioner / Cylinder Head Assembly / Cam Chain Guide / Cylinder Components" (Page 1D-30)
"Valve/Valve Spring Components" (Page 1D-47)
"Piston Components" (Page 1D-57)

Special Tool

BENL06L21408002

09900–06107 Snap ring pliers (External) ☞(Page 1D-63) / ☞(Page 1D-70)		09900–20101 Vernier calipers (150 mm) ☞(Page 1D-79)	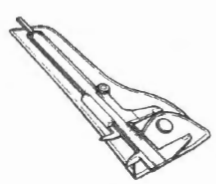
09900–20102 Vernier calipers (200 mm) ☞(Page 1D-50) / ☞(Page 1D-52) / ☞(Page 1D-61)	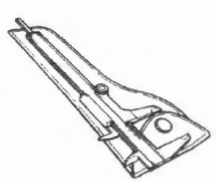	09900–20202 Micrometer (25 - 50 mm) ☞(Page 1D-20) / ☞(Page 1D-80) / ☞(Page 1D-81)	

09900–20204 Micrometer (75 - 100 mm) ☞(Page 1D-60) 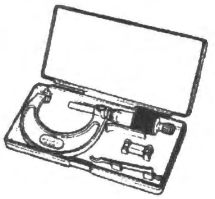	09900–20530 Cylinder gauge set ☞(Page 1D-56) 
09900–20602 Dial gauge (1 x 0.001 mm) ☞(Page 1D-21) / ☞(Page 1D-61) / ☞(Page 1D-78) 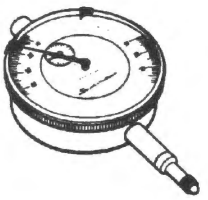	09900–20607 Dial gauge (10 x 0.01 mm) ☞(Page 1D-21) / ☞(Page 1D-50) / ☞(Page 1D-50) / ☞(Page 1D-50) 
09900–20701 Dial gauge chuck ☞(Page 1D-21) / ☞(Page 1D-50) / ☞(Page 1D-50) / ☞(Page 1D-50) 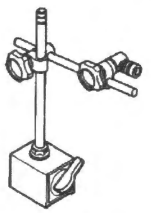	09900–20803 Thickness gauge ☞(Page 1D-54) / ☞(Page 1D-56) / ☞(Page 1D-60) / ☞(Page 1D-61) / ☞(Page 1D-79) 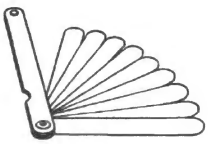
09900–21304 V blocks ☞(Page 1D-21) / ☞(Page 1D-50) / ☞(Page 1D-50) 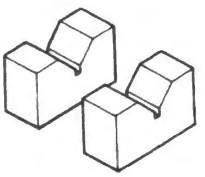	09900–22301 Plastigage (0.025 - 0.076 mm) ☞(Page 1D-21) / ☞(Page 1D-79) 
09900–22302 Plastigage (0.051 - 0.152 mm) ☞(Page 1D-21) 	09900–22403 Small bore gauge (18 - 35 mm) ☞(Page 1D-21) / ☞(Page 1D-61) / ☞(Page 1D-78) 
09912–66310 Micrometer (0 - 25 mm) ☞(Page 1D-21) / ☞(Page 1D-51) / ☞(Page 1D-60) / ☞(Page 1D-61) / ☞(Page 1D-79) 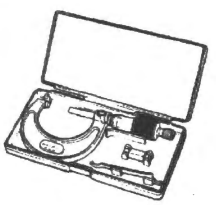	09913–60230 Journal bearing remover / installer This tool is used along with Journal bearing holder (09913-60241). ☞(Page 1D-71) / ☞(Page 1D-71) / ☞(Page 1D-72) 
09913–60241 Journal bearing holder This tool is used along with Journal bearing remover and installer (09913-60241). ☞(Page 1D-71) / ☞(Page 1D-72) 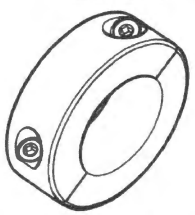	09913–70210 Bearing installer set ☞(Page 1D-74) / ☞(Page 1D-74) / ☞(Page 1D-75) / ☞(Page 1D-75) 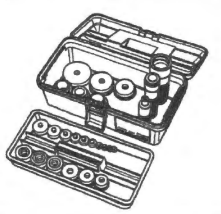

09915–63311 Compression gauge adapter ☞(Page 1D-2) 	09915–64512 Compression gauge set (2500 kPa) 1. Gauge 2. Hose (Adapter) ☞(Page 1D-2) 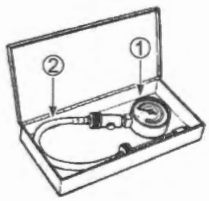
09916–10911 Valve lapper set ☞(Page 1D-51) 	09916–14510 Valve lifter 1. Main unit 2. Attachment ☞(Page 1D-48) / ☞(Page 1D-49) 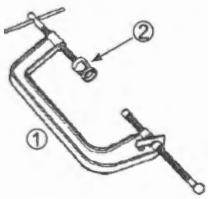
09916–14522 Valve lifter attachment ☞(Page 1D-48) / ☞(Page 1D-49) 	09916–34542 Reamer handle ☞(Page 1D-54) / ☞(Page 1D-55) 
09916–34550 Valve guide reamer (ø5.5) ☞(Page 1D-55) 	09916–34580 Valve guide reamer (ø10.8) ☞(Page 1D-54) 
09916–44910 Valve guide installer / remover ☞(Page 1D-54) / ☞(Page 1D-55) 	09916–53340 Valve guide installer attachment ☞(Page 1D-55) 
09916–84511 Tweezers ☞(Page 1D-48) / ☞(Page 1D-49) 	09919–28620 Sleeve protector ☞(Page 1D-48) / ☞(Page 1D-49) 
09920–13120 Crankcase separator 1. Main unit 2. Bolt 3. Attachment ☞(Page 1D-65) 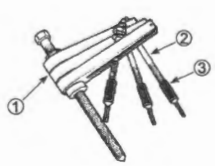	09924–74570 Bearing installer / remover ☞(Page 1D-71) / ☞(Page 1D-73) 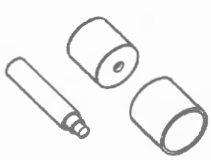
09924–84510 Bearing installer set ☞(Page 1D-71) 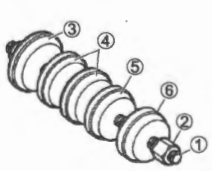	09930–44541 Rotor holder ☞(Page 1D-63) / ☞(Page 1D-64) / ☞(Page 1D-69) / ☞(Page 1D-69) 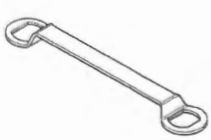

09940–14980 Engine mounting adjuster wrench ☞(Page 1D-25) / ☞(Page 1D-26) 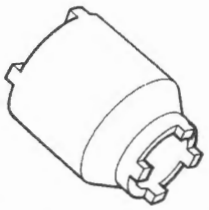	09940–14990 Engine mounting adjuster wrench ☞(Page 1D-24) / ☞(Page 1D-26) 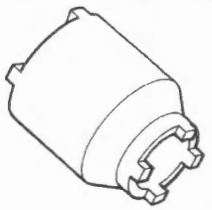
09941–34513 Bearing installer set ☞(Page 1D-73) 	

Engine Lubrication System

Precautions

Precautions for Engine Oil

BENL06L21500001

Refer to "Fuel / Oil / Fluid / Coolant Recommendation" in Section 0C (Page 0C-18).

Schematic and Routing Diagram

Engine Lubrication System Chart Diagram

BENL06L21502001

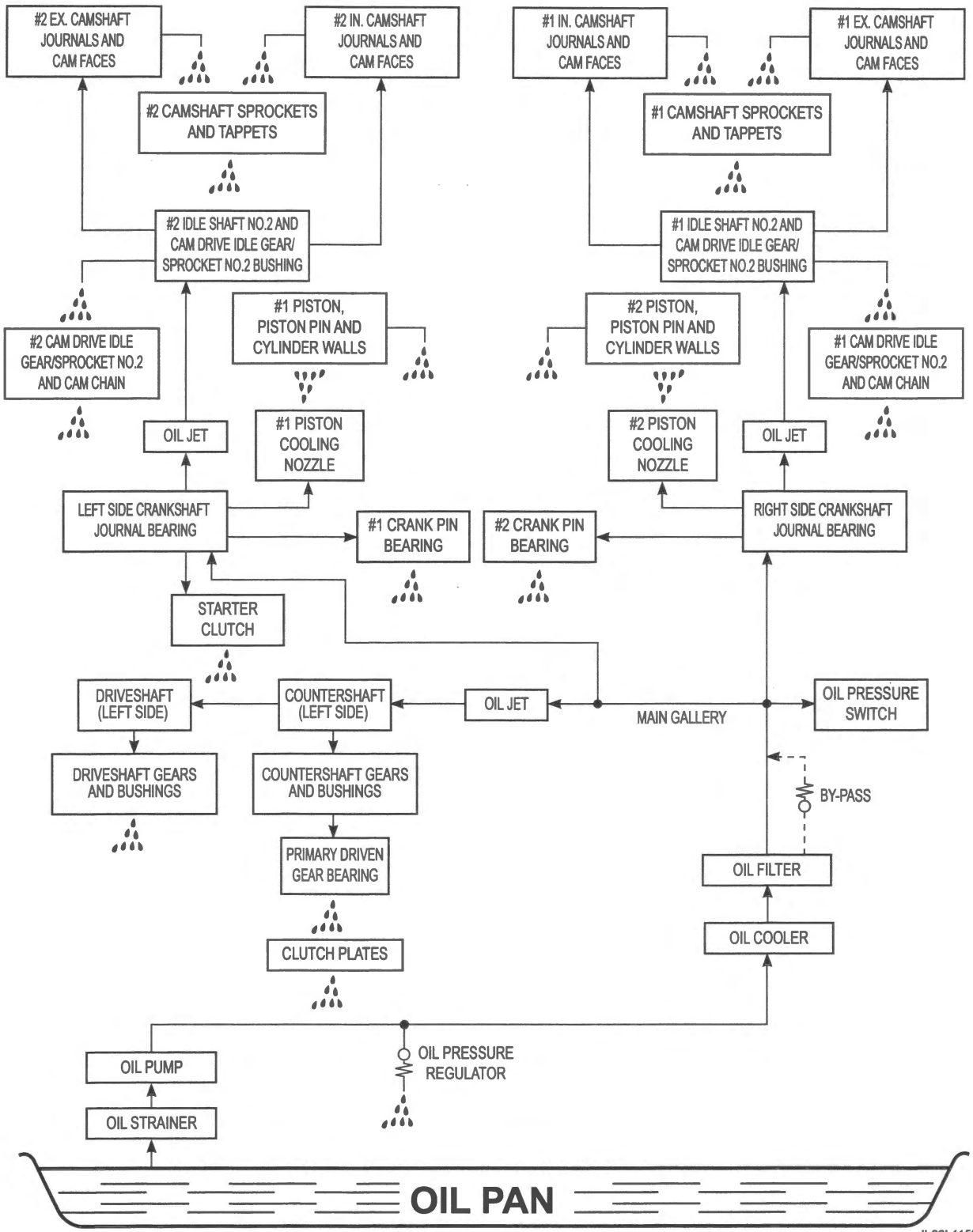

IL06L1150001-01

Diagnostic Information and Procedures

Engine Lubrication Symptom Diagnosis

BENL06L21504001

Condition	Possible cause	Correction / Reference Item
Engine overheats	Insufficient amount of engine oil.	*Check level and add. ☞(Page 0B-14)*
	Defective oil pump.	*Replace. ☞(Page 1E-10)*
	Clogged oil circuit.	*Clean.*
	Incorrect engine oil.	*Change. ☞(Page 0B-14)*
	Clogged oil cooler.	*Replace. ☞(Page 1E-5)*
Exhaust smoke is dirty or thick	Excessive amount of engine oil.	*Check level and drain. ☞(Page 0B-14)*
Engine lacks power	Excessive amount of engine oil.	*Check level and drain. ☞(Page 0B-14)*

Oil Pressure Check

BENL06L21504002

Check the engine oil pressure periodically. This will give a good indication of the condition of the moving parts.

NOTE

Before checking the oil pressure, check the following:

- **Oil level: ☞(Page 0B-14)**
- **Oil leaks (If leak is found, repair it.)**
- **Oil quality (If oil is discolored or deteriorated, replace it.)**

1) Start the engine and check if the oil pressure indicator is turned on. If the indicator stays on, check the oil pressure indicator circuit. If the circuit is OK, check the oil pressure in the following manner.
2) Remove the oil gallery plug (M8) (1).

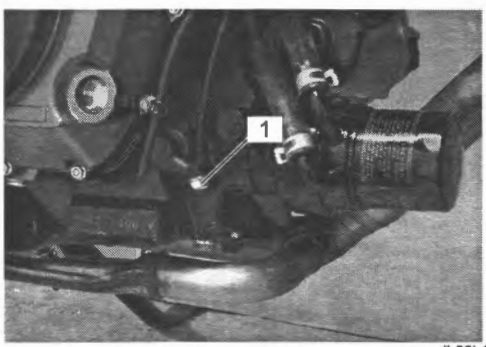

IL06L1150002-01

3) Install the oil pressure gauge and attachment into the oil gallery.

Special tool
(A): 09915–77331
(B): 09915–74521
(C): 09915–74533

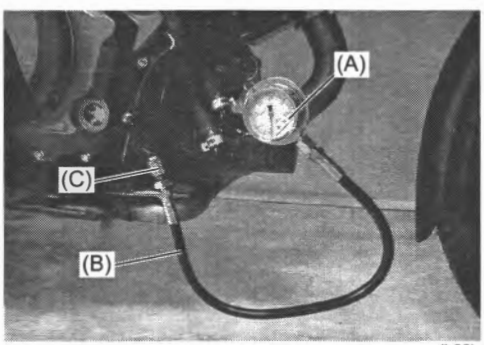

IL06L1150003-01

4) Warm up the engine as follows:
Summer: 10 min. at 2000 r/min
Winter: 20 min. at 2000 r/min
5) After warm up, increase the engine speed to 3000 r/min and read the oil pressure gauge.
If the oil pressure is lower or higher than the specification, the following causes may be considered.

At 60 °C (140 °F), 3000 r/min
[Standard]: 400 – 700 kPa (4 – 7 kgf/cm², 57 – 100 psi) at 3000 r/min

High oil pressure	Low oil pressure
• Engine oil viscosity is too high • Clogged oil passage • Combination of the above items	• Clogged oil filter • Oil leakage from the oil passage • Damaged O-ring • Defective oil pump • Combination of the above items

6) Stop the engine and remove the oil pressure gauge and attachment.

⚠ WARNING

To avoid the risk of being burned, remove the oil pressure gauge when the oil has cooled.

7) Install the new gasket to the oil gallery plug (M8) (1).
8) Install the oil gallery plug (M8) and tighten it to the specified torque.

Tightening torque
Oil gallery plug (M8) (a): 18 N·m (1.8 kgf-m, 13.5 lbf-ft)

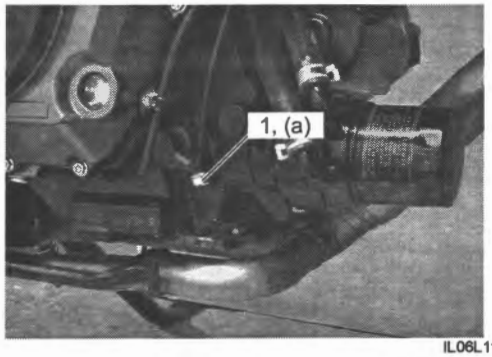

IL06L1150004-01

9) Check the engine oil level. ☞(Page 0B-14)

Repair Instructions

Engine Oil Inspection

BENL06L21506001

Refer to "Engine Oil" in Section 0B (Page 0B-14).

Engine Oil Replacement

BENL06L21506002

Refer to "Engine Oil" in Section 0B (Page 0B-14).

Oil Filter Replacement

BENL06L21506003

Refer to "Engine Oil Filter Replacement" in Section 0B (Page 0B-15).

Oil Strainer / Oil Pressure Regulator Removal and Installation

BENL06L21506004

Removal

1) Remove the clutch cover and gasket. ☞(Page 5C-15)
2) Remove the oil strainer (1) and oil pressure regulator (2).

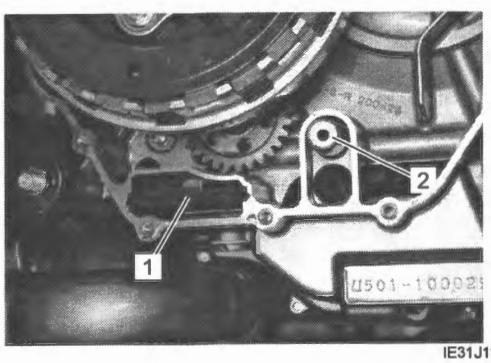

IE31J1150010-01

Installation

1) Install the oil strainer (1).

NOTICE

- **The lip (2) of the oil strainer should be positioned downward.**
- **The shorter side "a" of the oil strainer should be positioned inside.**

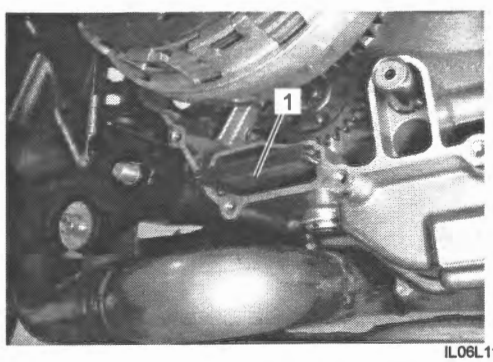

IL06L1150010-01

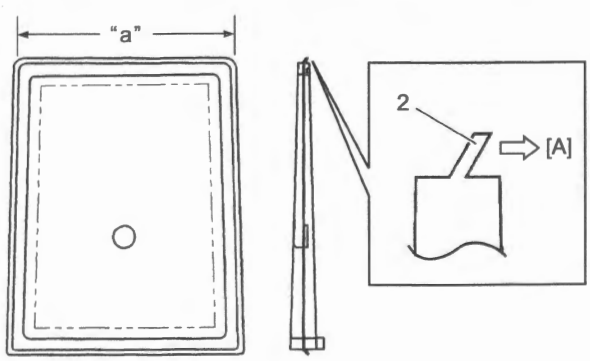

IH18K1150052-01

2) Apply grease to the new O-ring.

"A": Grease 99000–25011 (SUZUKI SUPER GREASE A)

3) Install the oil pressure regulator (1).

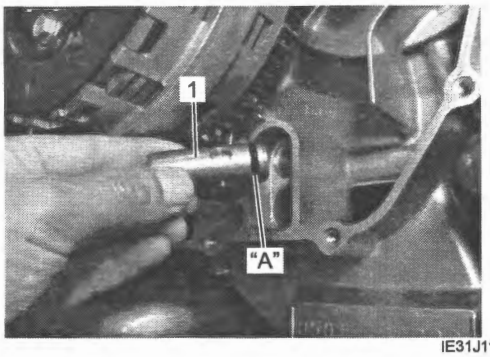

IE31J1150012-01

4) Install the clutch cover. ☞(Page 5C-17)

Oil Strainer Inspection and Cleaning

BENL06L21506005

Refer to "Oil Strainer / Oil Pressure Regulator Removal and Installation" (Page 1E-4).
If the oil strainer is clogged with sediment or rust, clean the oil strainer using compressed air.

NOTE

When the filter is dirtied excessively, replace the oil strainer with a new one.

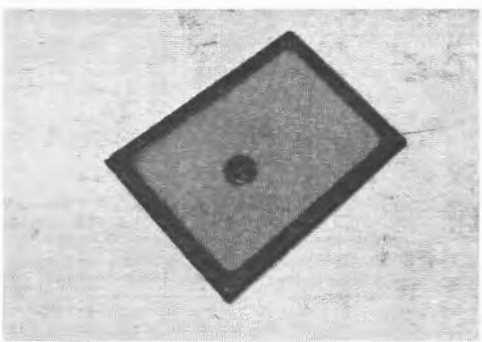

IE31J1150013-01

Oil Pressure Regulator Inspection

BENL06L21506006

Refer to "Oil Strainer / Oil Pressure Regulator Removal and Installation" (Page 1E-4).
Inspect the operation of the oil pressure regulator (1) by pushing on the piston with a proper bar.
If the piston does not operate, replace the oil pressure regulator with a new one.

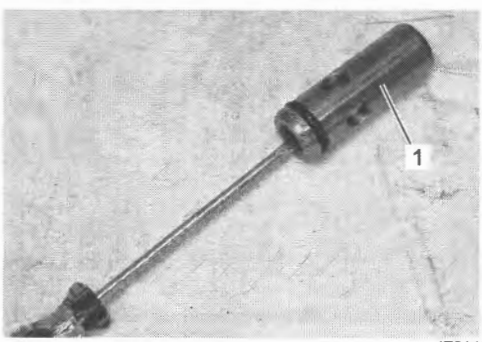

IE31J1150014-01

Oil Cooler / Oil Cooler Hose Inspection

BENL06L21506007

Oil Cooler Hose Inspection

Refer to "Water Hose Inspection" in Section 1F (Page 1F-11).

Oil Cooler Inspection

Inspect the oil cooler (1) for engine oil leakage. If any defects are found, replace the oil cooler with a new one. ☞(Page 1E-5)

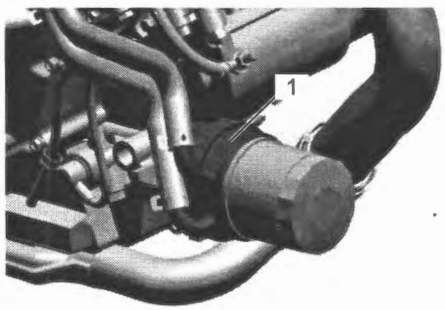

IL06L1150005-02

Oil Cooler Removal and Installation

BENL06L21506008

Removal

1) Drain engine coolant. ☞(Page 0B-14)
2) Remove the oil filter from the oil cooler. ☞(Page 1E-4)
3) Disconnect the oil cooler outlet hose (1) from the oil cooler.
4) Remove the oil cooler union bolt (2) and washer from the oil cooler.
5) Remove the oil cooler (3) from the right crankcase.

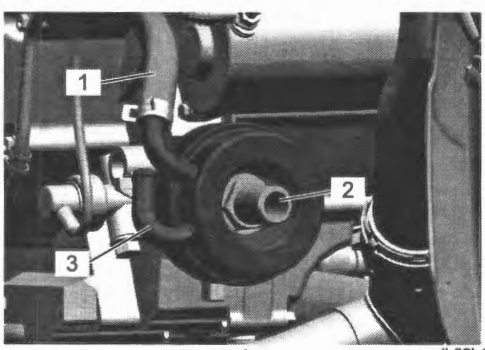

IL06L1150006-02

Installation

Install the oil cooler in the reverse order of removal. Pay attention to the following points:

- Apply engine oil to the new O-ring (1).
- Contact the projection (2) of the oil cooler onto the projection (3) of the crankcase and install the oil cooler (4).

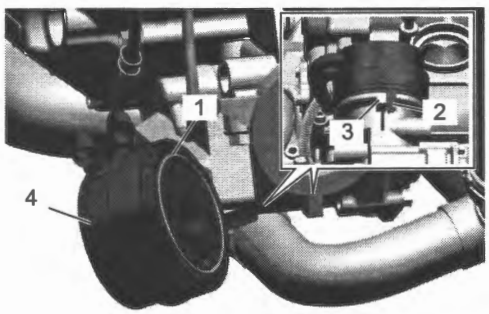

IL06L1150007-02

- Tighten the oil cooler union bolt (1) to the specified torque.

Tightening torque
Oil cooler union bolt (a): 70 N·m (7.1 kgf-m, 52.0 lbf-ft)

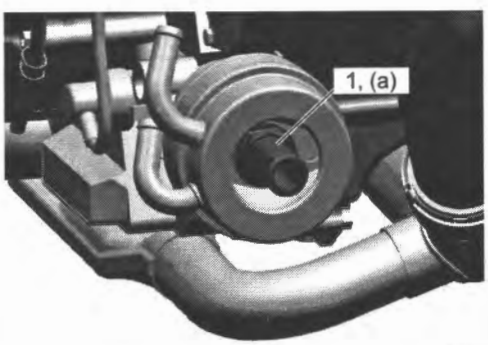

IL06L1150009-01

- Connect the oil cooler outlet hose to the oil cooler. ☞(Page 1F-3)
- Install the oil filter and pour engine oil. ☞(Page 1E-4)
- Pour engine coolant. ☞(Page 1F-7)

Oil Pressure Switch Removal and Installation

BENL06L21506009

Removal

1) Turn the ignition switch OFF.
2) Drain engine oil. ☞(Page 0B-14)
3) Disconnect the oil pressure switch lead wire (1).
4) Remove the oil pressure switch (2).

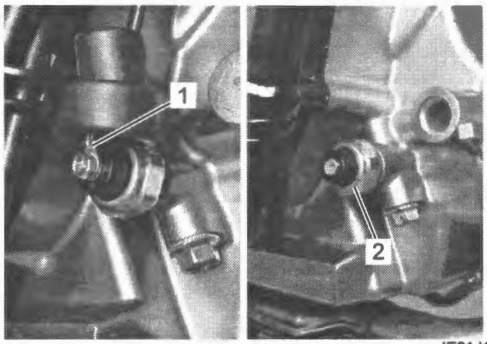

IE31J1150015-02

Installation

1) Install the oil pressure switch (1), apply the sealant to its thread part and tighten it to the specified torque.

NOTE

Do not apply sealant to oil pressure switch hole.

"A": Sealant 99000–31140 (SUZUKI BOND 1207B)

Tightening torque
Oil pressure switch (a): 13 N·m (1.3 kgf-m, 9.5 lbf-ft)

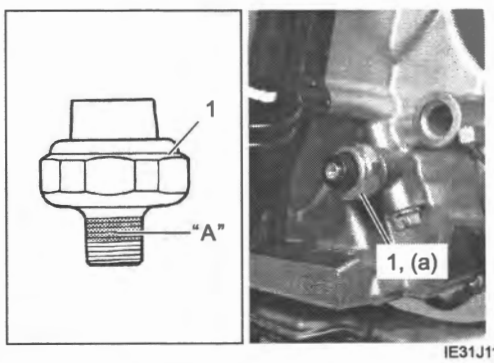

IE31J1150016-01

2) Connect the oil pressure switch lead wire (1). ☞(Page 9A-23)

Tightening torque
Oil pressure switch lead wire bolt (a): 1.5 N·m (0.15 kgf-m, 1.10 lbf-ft)

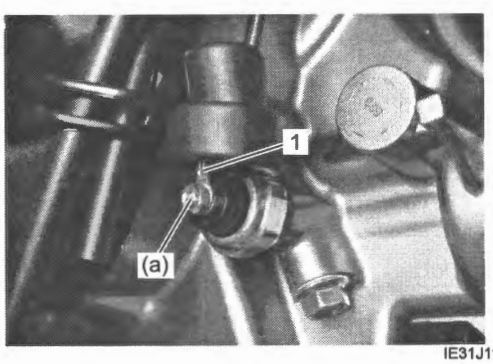

IE31J1150017-02

3) Pour engine oil. ☞(Page 0B-14)

Oil Pressure Switch Inspection

BENL06L21506010

Refer to "Oil Pressure Switch Removal and Installation" (Page 1E-6).

NOTE

Before inspecting the oil pressure switch, check if the engine oil level is correct. ☞(Page 1E-4)

1) Disconnect the oil pressure switch lead wire from the oil pressure switch.
2) Inspect for continuity between the oil pressure switch terminal (1) and crankcase (2) using a circuit tester. If any abnormality is found, replace the oil pressure switch with a new one.

	Oil pressure switch terminal	Crankcase
Engine is at stop	○	○
Engine is running		

IJ04K1150002-01

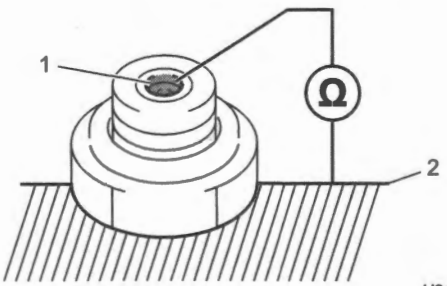

IJ04K1150003-01

3) After finishing the oil pressure switch inspection, install the removed parts.

Oil Jet / Piston Cooling Nozzle Removal and Installation

BENL06L21506011

Oil Jet (For Cylinder Head)

Removal

1) Remove the cylinders. ☞(Page 1D-32)
2) Remove the oil jets (for cylinder head) (1).

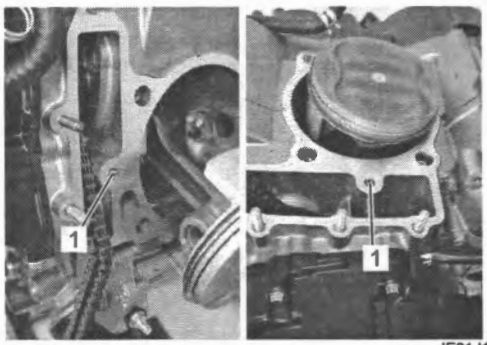

IE31J1150018-01

Installation

Install the oil jet (for cylinder head) in the reverse order of removal. Pay attention to the following point:

- Apply grease to the new O-rings.

NOTE

Identify the cylinder head side oil jets by stamped number [14] (1).

"A": Grease 99000–25011 (SUZUKI SUPER GREASE A)

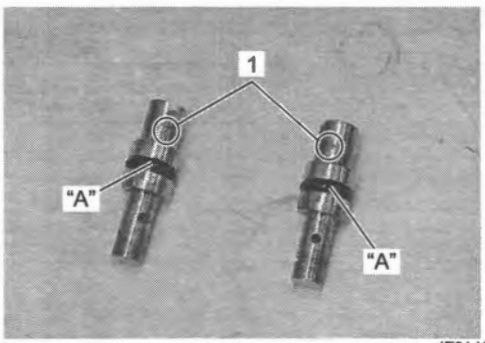

IE31J1150019-01

Oil Jet (For transmission)

Removal

1) Drain engine oil. ☞(Page 0B-14)
2) Remove the generator cover. ☞(Page 1J-5)
3) Remove the engine sprocket. ☞(Page 3A-2)
4) Remove the oil seal retainer mounting bolts (1) and oil seal retainer (2).

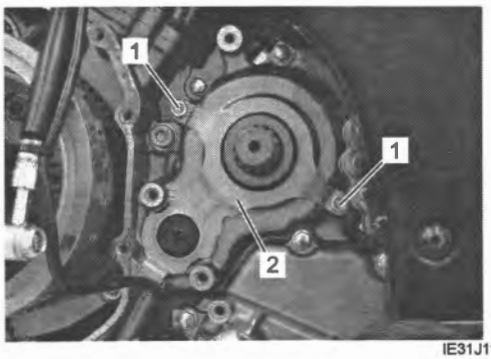

IE31J1150020-02

5) Remove the clutch push rod oil seal (1).

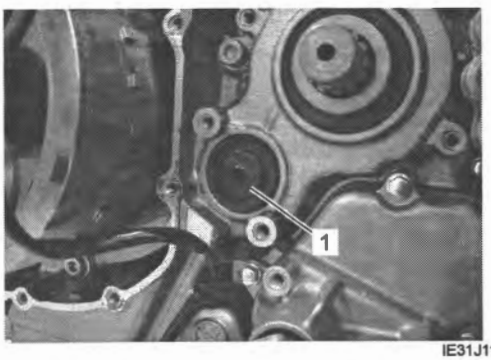

IE31J1150021-01

6) Remove the oil gallery plug (M8) (1).

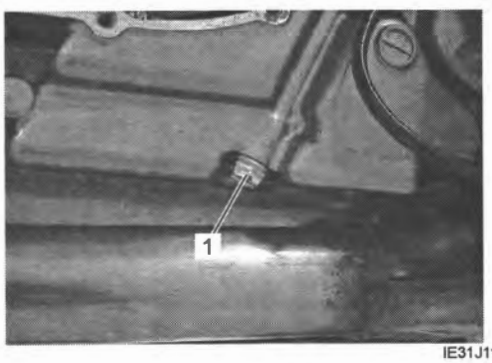

IE31J1150022-01

7) Remove the oil gallery jet (for transmission) (1) with a suitable bar (2).

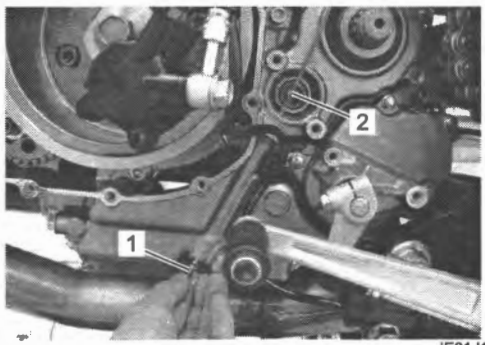

IE31J1150023-01

Installation

Install the oil jet (for transmission) in the reverse order of removal. Pay attention to the following points:

- Apply grease to the new O-ring.

NOTE

Identify the cylinder head side oil jet by stamped number [10] (1).

"A": Grease 99000–25011 (SUZUKI SUPER GREASE A)

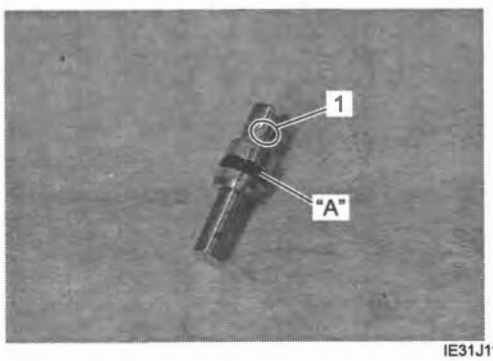

IE31J1150024-01

- Install the oil gallery jet (for transmission) (1) with a suitable bar.

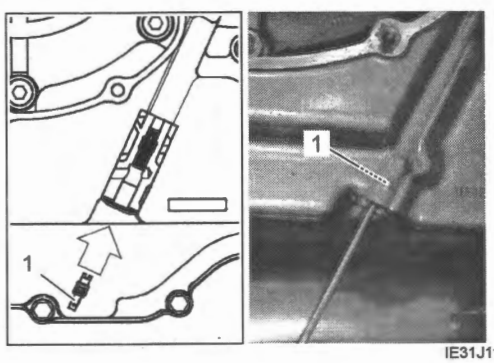

IE31J1150025-02

- Install the new gaskets.

- Tighten the oil gallery plug (M8) (1) to the specified torque.

  Tightening torque
  Oil gallery plug (M8) (a): 18 N·m (1.8 kgf-m, 13.5 lbf-ft)

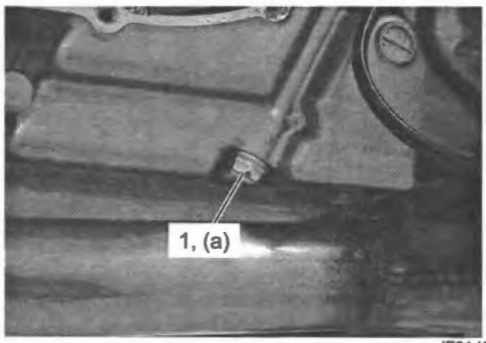

IE31J1150026-01

- Install the new clutch push rod oil seal (1) with the special tool.

  Special tool
  (A): 09913–70210

- Apply grease to lip of clutch push rod oil seal (1).

  "A": Grease 99000–25011 (SUZUKI SUPER GREASE A)

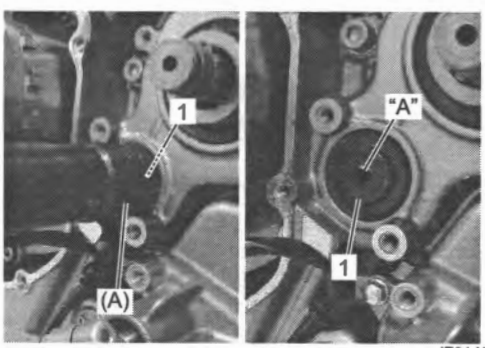

IE31J1150027-01

- Install the engine sprocket. ☞(Page 3A-2)
- Install the generator cover. ☞(Page 1J-7)

Piston Cooling Nozzle
Removal

1) Remove the pistons. ☞(Page 1D-58)
2) Remove the piston cooling nozzles (1).

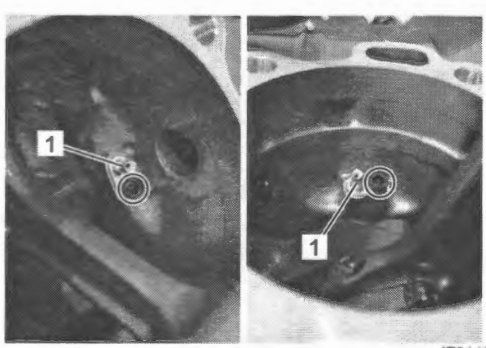

IE31J1150028-01

Installation
Install the piston cooling nozzle in the reverse order of removal. Pay attention to the following points:

- Apply grease to the new O-ring.

  "A": Grease 99000–25011 (SUZUKI SUPER GREASE A)

- Apply thread lock to the piston cooling nozzle bolt (1) and tighten it to the specified torque.

  "B": Thread lock cement 99000–32150 (THREAD LOCK CEMENT 1322D)

  Tightening torque
  Piston cooling nozzle bolt (a): 10 N·m (1.0 kgf-m, 7.5 lbf-ft)

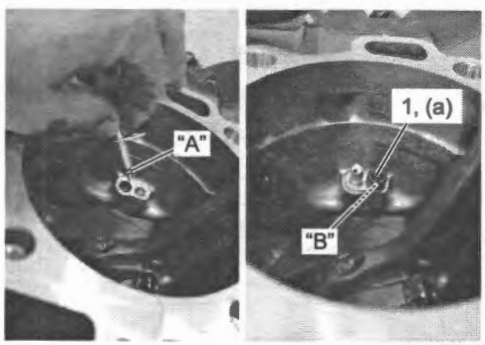

IE31J1150029-01

Oil Jet / Piston Cooling Nozzle Inspection

BENL06L21506012

Refer to "Oil Jet / Piston Cooling Nozzle Removal and Installation" (Page 1E-7).
Make sure that the oil jets and piston cooling nozzle are not clogged. If they are clogged, clean their oil passage using a wire of the proper size and compressed air.

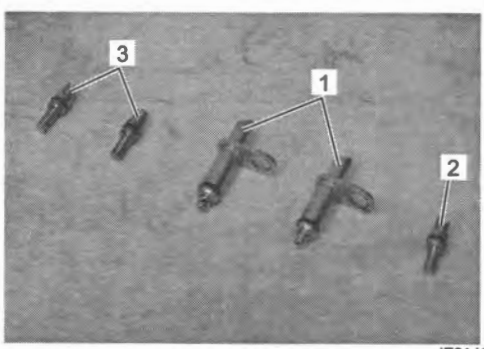

IE31J1150030-01

1.	Piston cooling nozzle
2.	Oil jet (for transmission)
3.	Oil jet (for cylinder head)

Oil Pump Removal and Installation

BENL06L21506013

Refer to "Crankcase Assembly Disassembly" in Section 1D (Page 1D-62) and "Crankcase Assembly Reassembly" in Section 1D (Page 1D-66).

Removal

1) Remove the oil pump assembly (1).

NOTICE

Do not attempt to disassemble the oil pump assembly. The oil pump is available only as an assembly.

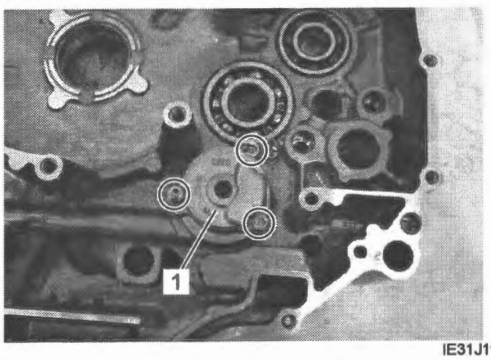

IE31J1150031-01

Installation

Install the oil pump in the reverse order of removal.

Oil Pump Inspection

BENL06L21506014

Refer to "Oil Pump Removal and Installation" (Page 1E-10).

Rotate the oil pump by hand and check that it moves smoothly. If it does not move smoothly, replace the oil pump assembly.

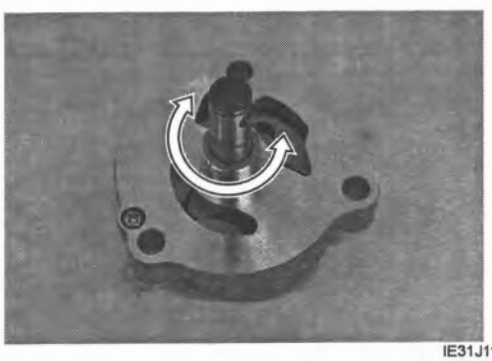

IE31J1150032-02

Specifications

Tightening Torque Specifications

BENL06L21507001

Fastening part	Tightening torque			Note
	N·m	kgf-m	lbf-ft	
Oil gallery plug (M8)	18	1.8	13.5	☞(Page 1E-4) / ☞(Page 1E-9)
Oil cooler union bolt	70	7.1	52.0	☞(Page 1E-6)
Oil pressure switch	13	1.3	9.5	☞(Page 1E-6)
Oil pressure switch lead wire bolt	1.5	0.15	1.10	☞(Page 1E-6)
Piston cooling nozzle bolt	10	1.0	7.5	☞(Page 1E-9)

Reference:
For the tightening torques of fasteners not specified in this page, refer to:
"Fasteners Information" in Section 0C (Page 0C-10)

Special Tools and Equipment

Recommended Service Material

BENL06L21508001

Material	SUZUKI recommended product or Specification		Note
Grease	SUZUKI SUPER GREASE A	P/No.: 99000–25011	☞(Page 1E-4) / ☞(Page 1E-7) / ☞(Page 1E-8) / ☞(Page 1E-9) / ☞(Page 1E-9)
Sealant	SUZUKI BOND 1207B	P/No.: 99000–31140	☞(Page 1E-6)
Thread lock cement	THREAD LOCK CEMENT 1322D	P/No.: 99000–32150	☞(Page 1E-9)

Special Tool

BENL06L21508002

09913–70210 Bearing installer set ☞(Page 1E-9)		09915–74521 Oil pressure gauge hose ☞(Page 1E-3)	
09915–74533 Oil pressure gauge attachment ☞(Page 1E-3)	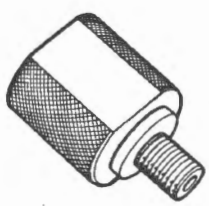	09915–77331 Oil pressure gauge (1000 kPa) ☞(Page 1E-3)	

Engine Cooling System

Precautions

Precautions for Engine Cooling System

BENL06L21600001

Refer to "General Precautions" in Section 00 (Page 00-1) and "Precautions for Electrical Circuit Service" in Section 00 (Page 00-2).

⚠ WARNING

- **You can be injured by boiling fluid or steam if you open the radiator cap when the engine is hot. After the engine cools, wrap a thick cloth around cap and carefully remove the cap by turning it a quarter turn to allow pressure to escape and then turn the cap all the way off.**
- **The engine must be cool before servicing the cooling system.**
- **Coolant is harmful:**
  - **If it comes in contact with skin or eyes, flush with water.**
  - **If swallowed accidentally, do not induce vomiting and call physician immediately.**
  - **Keep it away from children.**

Precautions for Engine Coolant

BENL06L21600002

Refer to "Fuel / Oil / Fluid / Coolant Recommendation" in Section 0C (Page 0C-18).

General Description

Engine Coolant Description

BENL06L21601001

Refer to "Fuel / Oil / Fluid / Coolant Recommendation" in Section 0C (Page 0C-18).

Schematic and Routing Diagram

Cooling Circuit Diagram

BENL06L21602001

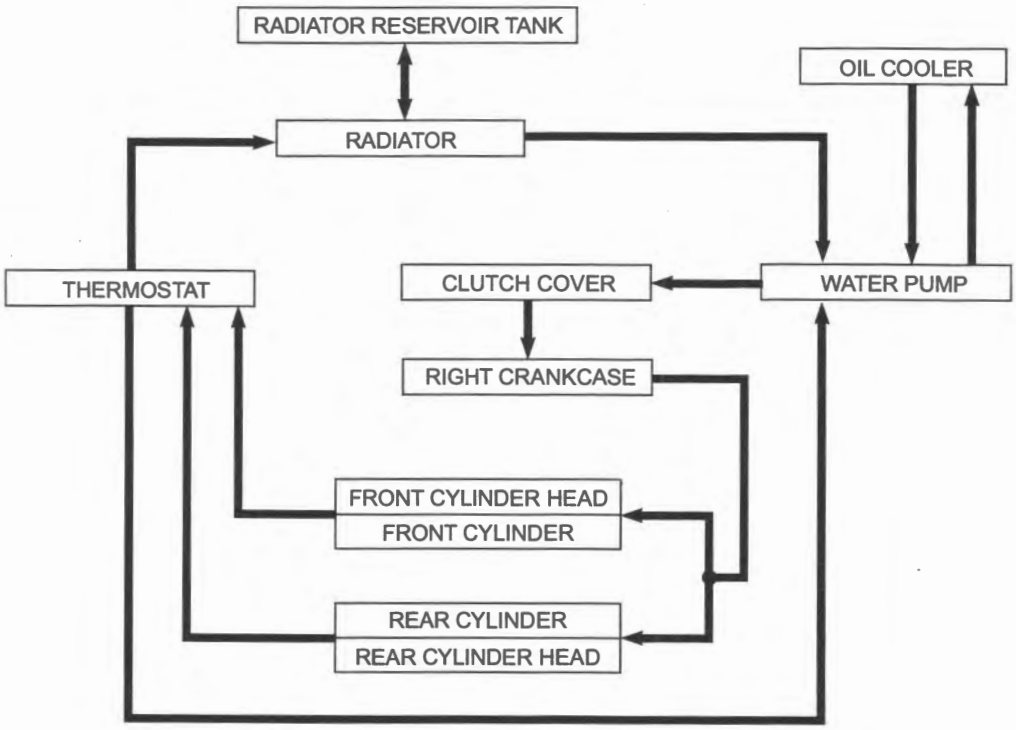

IL06L1160031-01

Water Hose Routing Diagram

BENL06L21602002

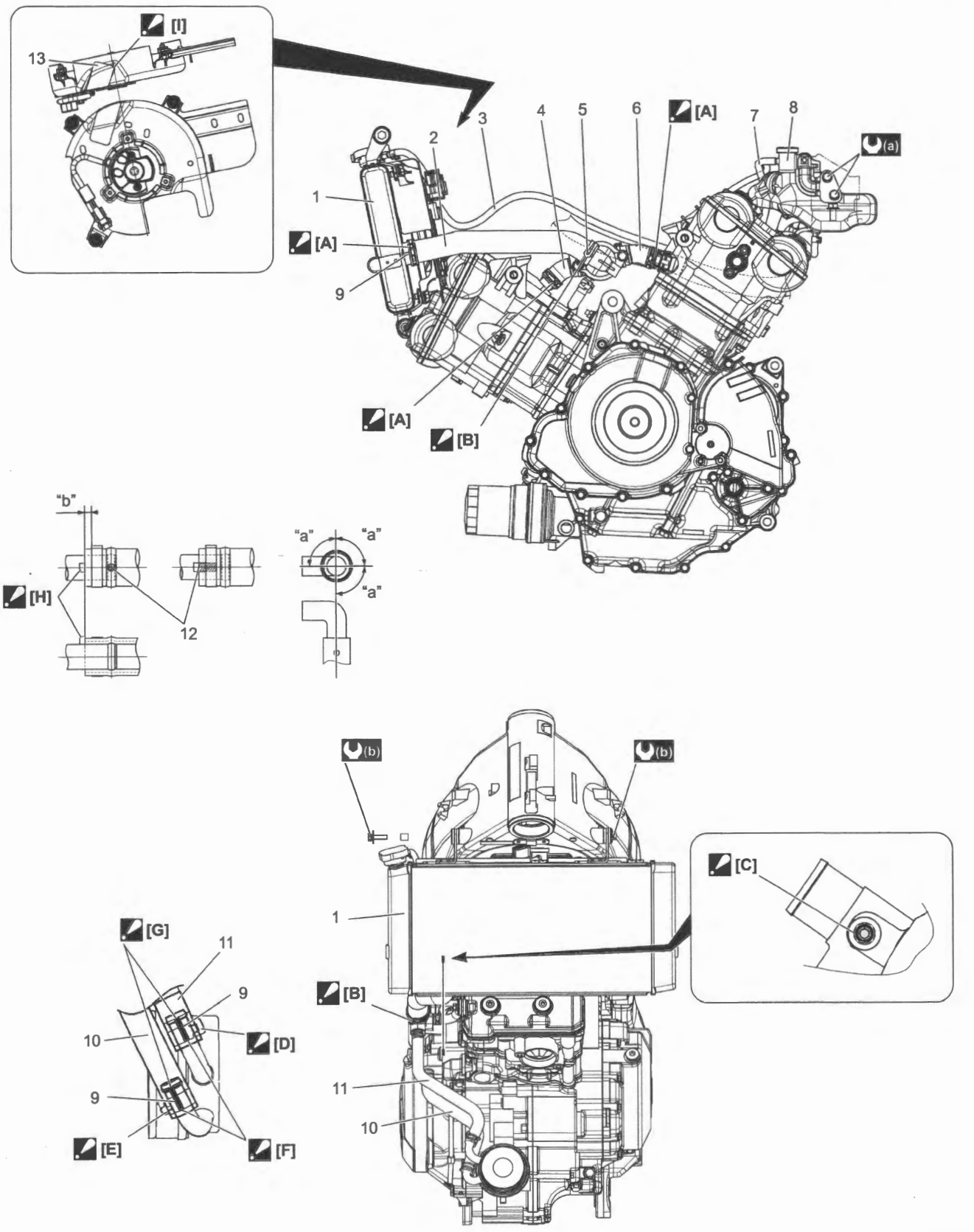

IL06L1160027-02

[A]: Face the clamp end left side.	1. Radiator	10. Oil cooler inlet hose
[B]: Face the clamp end downward.	2. Radiator inlet hose	11. Oil cooler outlet hose
[C]: Align the white mark of the water bypass hose with the pipe.	3. Reservoir tank inlet hose	12. Match mark
[D]: Face the clamp end forward.	4. Front connector inlet hose	13. Radiator fan shroud tape
[E]: Face the clamp end backward.	5. Orange mark	(a) : 11 N·m (1.1 kgf-m, 8.5 lbf-ft)
[F]: Align the match mark of the hoses with the clamp end.	6. Rear connector inlet hose	(b) : 10 N·m (1.0 kgf-m, 7.5 lbf-ft)
[G]: Align the match mark end of the hoses with the bulge of the oil cooler.	7. Reservoir tank overflow hose	"a": 90°
[H]: Insert the hose, make sure that the hose contact the stopper.	8. Reservoir tank	"b": 2 – 4 mm (0.08 – 0.16 in.)
[I]: Position the corner of radiator fan shroud tape as shown in figure. Align the tape with the concavity of the radiator fan shroud.	9. White mark Face the white mark of the radiator inlet hose left side.	

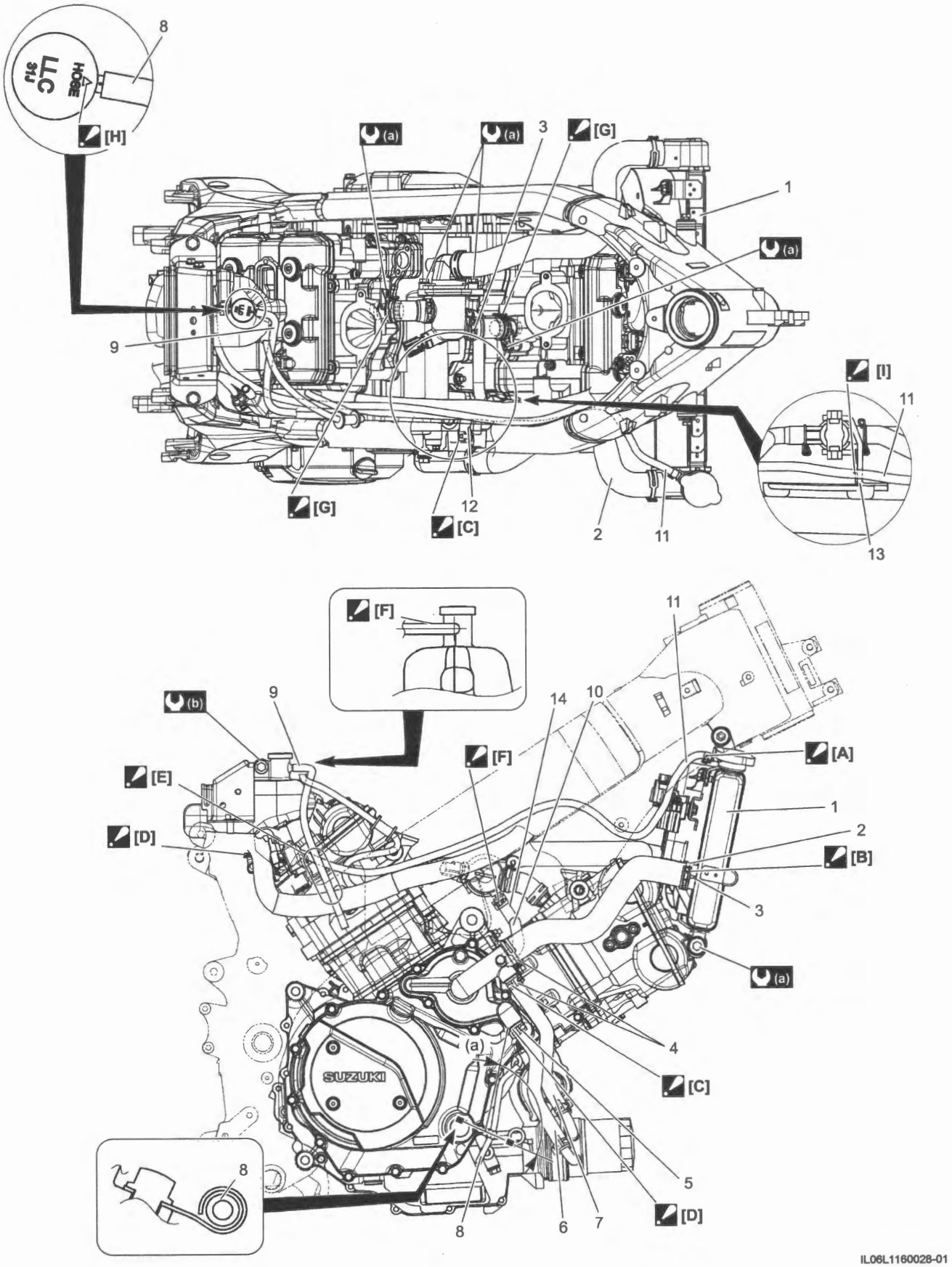

IL06L1160028-01

[A]: Face the clamp end downward.	1. Radiator	10. Water bypass hose
[B]: Face the clamp end right side.	2. Radiator outlet hose	11. Reservoir tank inlet hose
[C]: Face the clamp end forward.	3. Yellow mark Face the yellow mark of the radiator outlet hose right side.	12. White mark
[D]: Face the clamp end backward.	4. Orange mark	13. PAIR control solenoid valve bracket
[E]: Pass the reservoir tank overflow hose outside of the wiring harness.	5. Blue mark	14. Yellow mark
[F]: Set the reservoir tank over flow hose horizontally.	6. Oil cooler outlet hose	(a) : 10 N·m (1.0 kgf-m, 7.5 lbf-ft)
[G]: Face the clamp end upward.	7. Oil cooler inlet hose	(b) : 6 N·m (0.61 kgf-m, 4.5 lbf-ft)
[H]: Align the " △ " mark of the reservoir tank cap with the reservoir tank overflow hose.	8. Water pump drain hose	"a": 75° – 105°
[I]: Pass the reservoir tank inlet hose over the PAIR control solenoid valve bracket.	9. Reservoir tank overflow hose	

Diagnostic Information and Procedures

Engine Cooling Symptom Diagnosis

BENL06L21604001

Condition	Possible cause	Correction / Reference Item
Engine overheats	Not enough engine coolant.	*Add engine coolant. ☞(Page 0B-16)*
	Radiator core clogged with dirt or scale.	*Clean. ☞(Page 1F-9)*
	Faulty cooling fan.	*Repair or replace. ☞(Page 1F-8)*
	Defective cooling fan relay, or open-or-short circuited.	*Repair or replace. ☞(Page 1F-12)*
	Clogged water passage.	*Clean.*
	Air trapped in the cooling circuit.	*Bleed air. ☞(Page 0B-16)*
	Defective water pump.	*Replace. ☞(Page 1F-15)*
	Use of incorrect engine coolant.	*Replace. ☞(Page 0B-16)*
	Defective thermostat.	*Replace. ☞(Page 1F-12)*
	Defective ECT sensor.	*Replace. ☞(Page 1C-6)*
	Defective ECM.	*Replace. ☞(Page 1C-2)*
Engine over cools	Defective cooling fan relay, or open-or-short circuited.	*Repair or replace. ☞(Page 1F-12)*
	Extremely cold weather.	*Put on radiator cover.*
	Defective thermostat.	*Replace. ☞(Page 1F-12)*
	Defective ECT sensor.	*Replace. ☞(Page 1C-6)*
	Defective ECM.	*Replace. ☞(Page 1C-2)*

Repair Instructions

Engine Coolant Level Inspection

BENL06L21606001

Refer to "Engine Coolant" in Section 0B (Page 0B-16).

Engine Coolant Replacement

BENL06L21606002

Refer to "Engine Coolant" in Section 0B (Page 0B-16).

Engine Cooling System Inspection

BENL06L21606003

1) Remove the side cover assembly. ☞(Page 9D-33)
2) Remove the radiator cap (1) from the radiator and connect the special tool to the filler.
3) Pressurize the cooling system with approx. 137 kPa (1.4 kgf/cm^2, 19.9 psi) of pressure, and then check if it holds the pressure for 10 seconds.

NOTICE

Do not exceed the radiator cap release pressure, or the radiator cap and subsequently the radiator, can be damaged.

Special tool
(A): 09918–78211
(B): 09918–78220

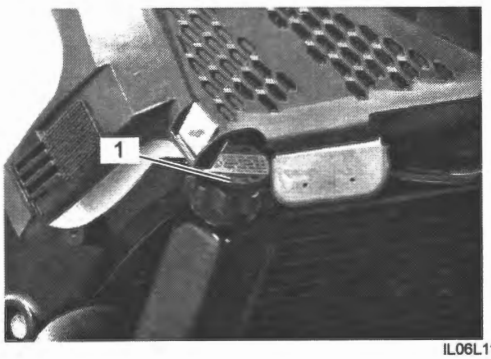

IL06L1160003-02

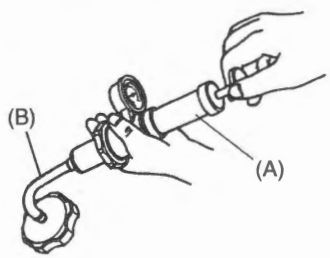

ID26J1160006-05

4) Install the removed parts.

Radiator Cap Inspection

BENL06L21606004

Refer to "Engine Cooling System Inspection" (Page 1F-7).

1) Remove the side cover assembly. ☞(Page 9D-33)
2) Remove the radiator cap (1) from the radiator.

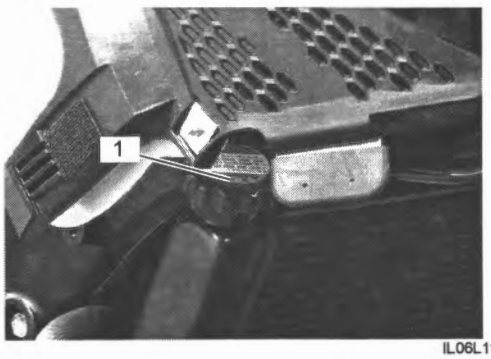

IL06L1160003-02

3) Attach the radiator cap (1) to the special tool as shown in the figure.
4) Slowly apply pressure to the radiator cap.
If the radiator cap does not hold the pressure for at least 10 seconds, replace it with a new one.

Special tool
(A): 09918–78211
(B): 09918–78220

Radiator cap valve opening pressure
[Standard]: 108.0 – 137.4 kPa (1.1 – 1.4 kgf/cm^2,15.7 – 19.9 psi)

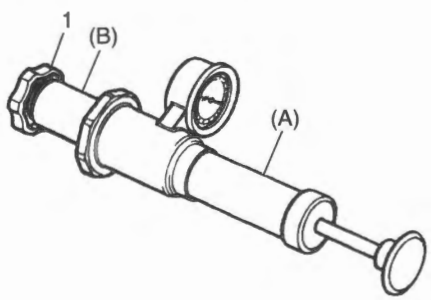

ID26J1160007-04

Cooling Fan On-Vehicle Inspection

BENL06L21606005

1) Remove the side cover assembly. ☞(Page 9D-33)
2) Disconnect the cooling fan motor coupler (1).

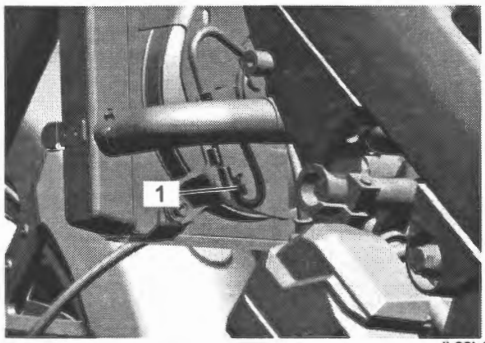

IL06L1160004-03

3) Test the cooling fan motor (3) for load current with an ammeter (2) connected as shown in the figure.
If the fan motor does not turn, replace the cooling fan assembly with a new one. ☞(Page 1F-8)

NOTE

- **When making this test, it is not necessary to remove the cooling fan.**
- **Make sure that the battery (1) has a capacity enough to supply the motor with 12 V.**
- **With the motor running at full speed, the ammeter should indicate an amperage not higher than 5 A.**

Cooling fan operating temperature
Intake air temperature 40 °C (104 °F) or less
(ON→OFF) [Standard]: Approx. 100 °C (212 °F)
(OFF→ON) [Standard]: Approx. 105 °C (221 °F)

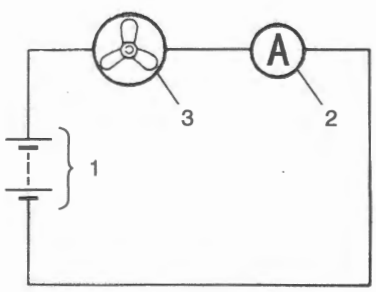

ID26J1160029-01

4) After finishing the cooling fan inspection, install the removed parts.

Radiator Hose Inspection

BENL06L21606006

Refer to "Radiator Hose" in Section 0B (Page 0B-17).

Radiator / Cooling Fan Motor Removal and Installation

BENL06L21606007

Removal

1) Drain the engine coolant. ☞(Page 0B-16)
2) Remove the side cover assembly. ☞(Page 9D-33)
3) Remove the fuel tank. ☞(Page 1G-7)
4) Remove the regulator/rectifier. ☞(Page 1J-8)
5) Disconnect the cooling fan motor coupler (1).

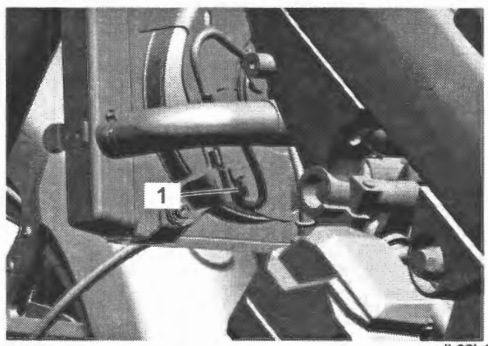

IL06L1160004-03

6) Disconnect the radiator outlet hose (1) and reservoir tank inlet hose (2) from the radiator.

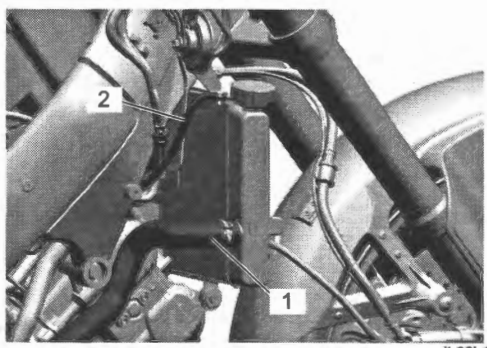

IL06L1160005-02

7) Disconnect the radiator inlet hose (1) from the radiator.

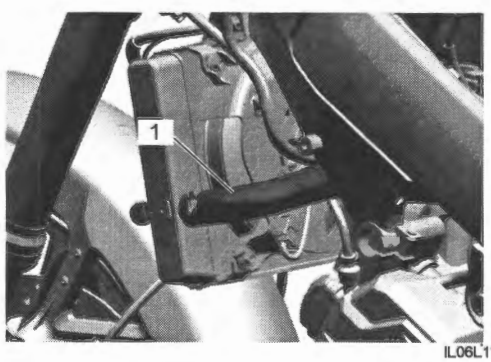

IL06L1160007-02

8) Remove the bolts (1).

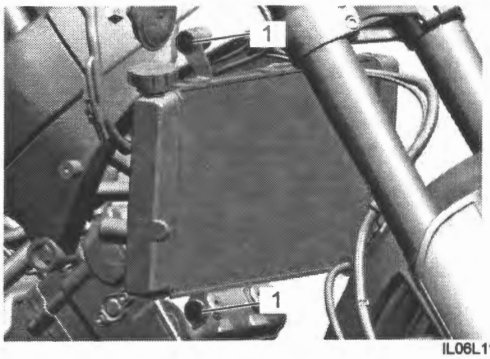

IL06L1160008-02

9) Remove the couplers (1) and clamps (2) from the radiator fan cover, and then remove the radiator.

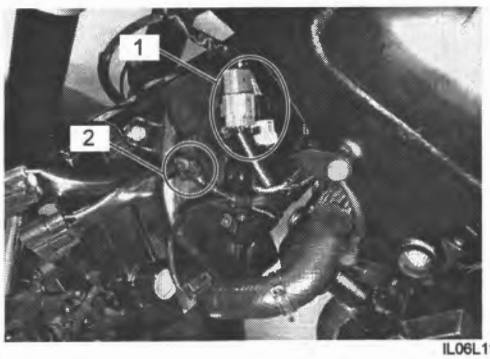

IL06L1160009-01

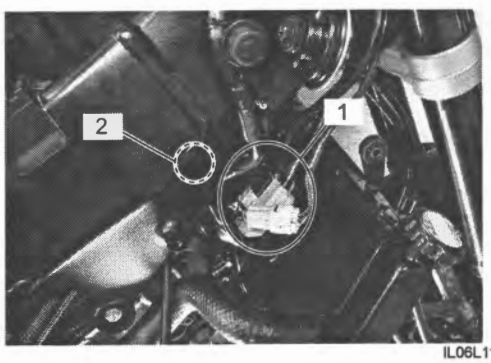

IL06L1160010-01

10) Remove the cooling fan motor (1) from the radiator.

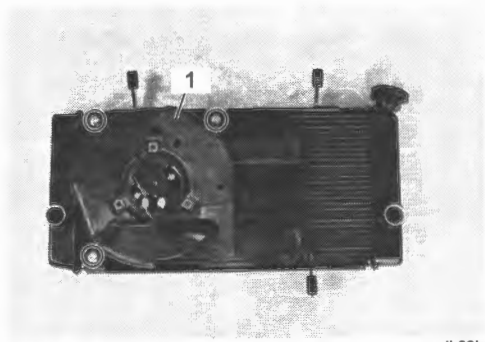

IL06L1160011-01

Installation

Install the radiator in the reverse order of removal. Pay attention to the following points:

- Tighten the cooling fan assembly mounting bolts (1) to the specified torque.

Tightening torque

Cooling fan assembly mounting bolt (a): 8.4 N·m (0.86 kgf-m, 6.20 lbf-ft)

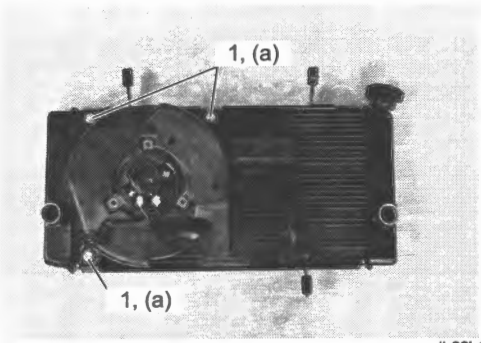

IL06L1160012-01

- Tighten the radiator mounting bolts (1) to the specified torque.

Tightening torque

Radiator mounting bolt (a): 10 N·m (1.0 kgf-m, 7.5 lbf-ft)

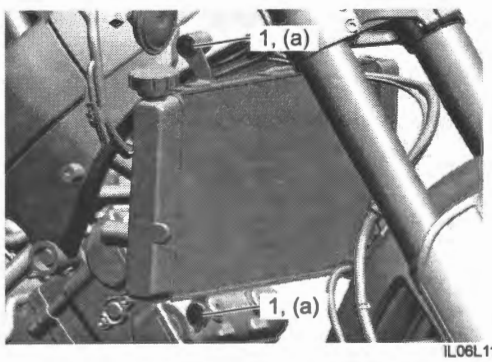

IL06L1160013-02

- Connect the radiator hoses securely. ☞(Page 1F-3)
- Pour engine coolant. ☞(Page 0B-16)
- Install the removed parts.

Radiator Inspection and Cleaning

BENL06L21606008

Inspection

1) Inspect the radiator for coolant leaks. If any defects are found, replace the radiator with a new one.
2) If the fins are bent or dented, repair them by carefully straightening them with the blade of a small screwdriver.

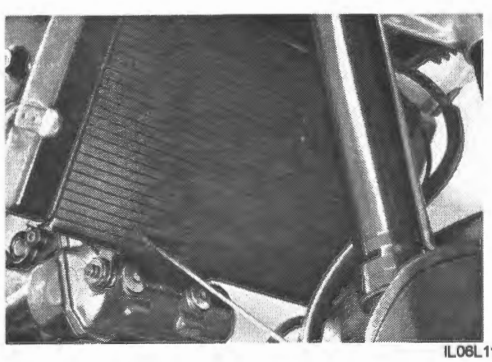

IL06L1160014-01

Cleaning

1) Remove the side cover assembly. ☞(Page 9D-33)
2) Blow out any foreign matter that is stuck in the radiator fins using compressed air.

NOTICE

- **Do not bend the fins when using compressed air.**
- **Apply compressed air from the engine side. If compressed air is applied from the other side, dirt will be forced into the pores of radiator.**

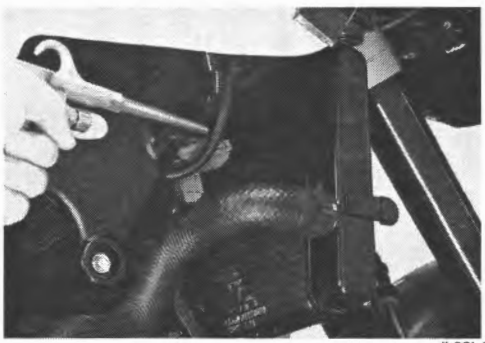

IL06L1160015-01

3) Install the removed parts.

Radiator Reservoir Tank Inspection

BENL06L21606009

1) Lift and support the fuel tank. ☞(Page 1G-7)
2) Inspect the radiator reservoir tank (1) coolant leaks. If any defects are found, replace the radiator reservoir tank with a new one.

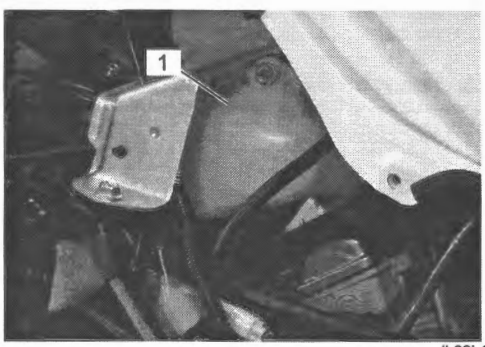

IL06L1160016-01

Radiator Reservoir Tank Removal and Installation

BENL06L21606010

Removal

1) Lift and support the fuel tank. ☞(Page 1G-7)
2) Disconnect the overflow hose (1) from the reservoir tank.
3) Remove the fuel tank bracket bolts (2) from the fuel tank bracket.
4) Remove the reservoir tank (3) from the fuel tank bracket.

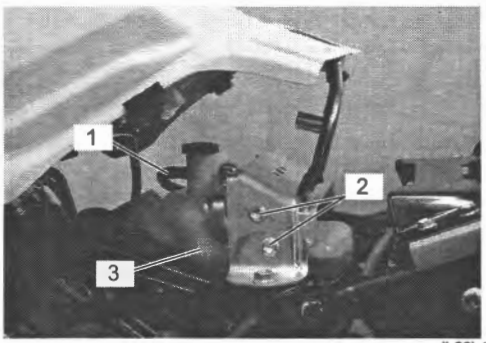

IL06L1160017-01

5) Disconnect the reservoir tank inlet hose (1) from the reservoir tank and drain the engine coolant.

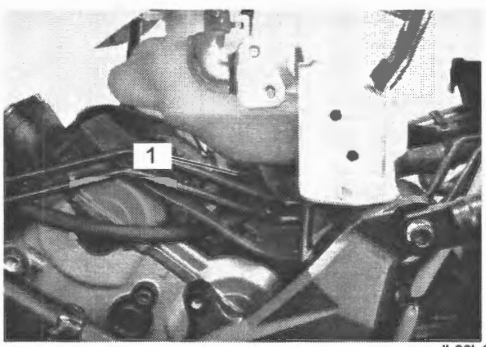

IL06L1160018-01

6) Remove the reservoir tank bracket (1).

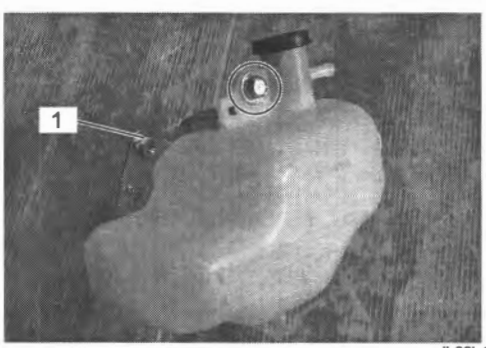

IL06L1160019-01

Installation
Install radiator reservoir tank in the reverse order of removal. Pay attention to the following points:

- Install the projection (1) of the reservoir tank bracket into the hole in the reservoir tank.
- Apply thread lock to the reservoir tank mounting bolt (2) and then tighten the bolt (2) to the specified torque.

"A": Thread lock cement 99000–32150 (THREAD LOCK CEMENT 1322D)

Tightening torque
Reservoir tank mounting bolt (a): 6 N·m (0.61 kgf-m, 4.45 lbf-ft)

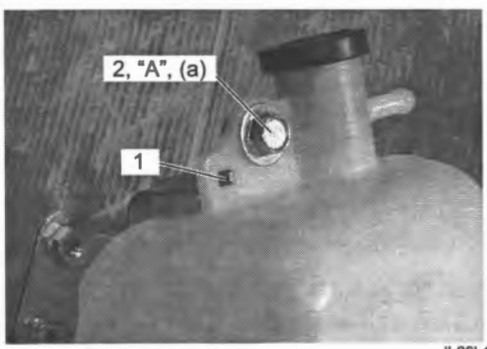

IL06L1160020-01

- Tighten the fuel tank bracket bolts (1) to the specified torque.

Tightening torque
Fuel tank bracket bolt (a): 11 N·m (1.1 kgf-m, 8.5 lbf-ft)

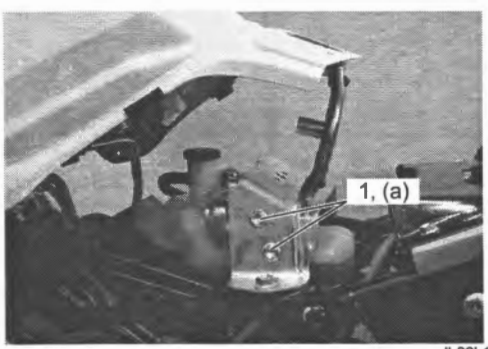

IL06L1160021-01

- Fill the reservoir tank to the upper level (1). ☞(Page 1F-7)

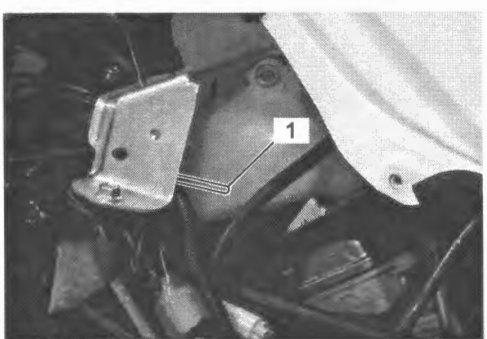

IL06L1160022-01

Water Hose Inspection
BENL06L21606011

1) Remove the throttle body. ☞(Page 1D-7)
2) Check the water hoses for crack, damage or engine coolant leakage. If any defect is found, replace the water hose with a new one.
3) Any leakage from the connecting section (1) should be corrected by proper tightening. ☞(Page 1F-3)

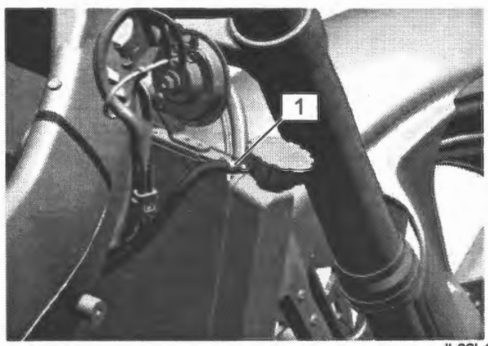

IL06L1160023-01

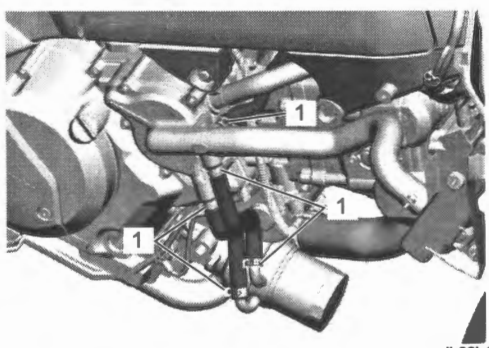

IL06L1160024-02

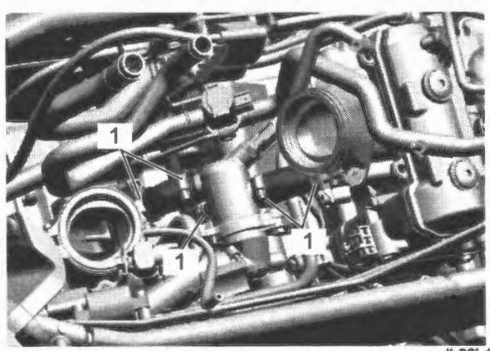

IL06L1160025-01

4) After finishing the water hose inspection, install the removed parts.

Water Hose Removal and Installation
BENL06L21606012

Removal
1) Drain engine coolant. ☞(Page 1F-7)
2) Remove the air cleaner box. ☞(Page 1D-6)
3) Remove the water hose. ☞(Page 1F-3)

Installation
Install the water hose in the reverse order of removal.

Cooling Fan Relay Inspection

BENL06L21606013

Refer to "Cooling Fan Relay Removal and Installation" (Page 1F-12).
Check the cooling fan relay in the following procedures. If abnormality is found, replace the relay box (1) with a new one.

1) Check that there is no continuity between terminals "T17" and "T23".
2) Check that there is continuity between terminals "T2" and "T8".
3) Connect battery positive (+) terminal and negative (–) terminal between terminals "T2" and "T8" and check for continuity between terminals "T17" and "T23".

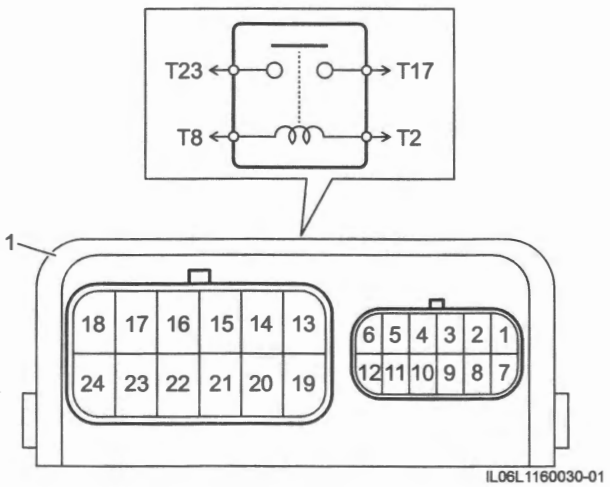

IL06L1160030-01

Cooling Fan Relay Removal and Installation

BENL06L21606014

Refer to "Relay Box Removal and Installation" in Section 9A (Page 9A-42).

Thermostat Removal and Installation

BENL06L21606015

Removal

1) Drain engine coolant. ☞(Page 0B-16)
2) Remove the throttle body. ☞(Page 1D-7)
3) Place a rag under the thermostat connector cap (1) and then remove the thermostat connector cap (1) from the thermostat.

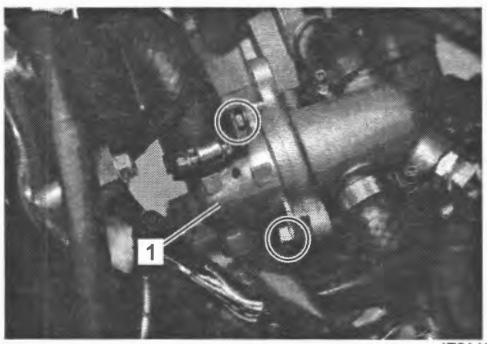

IE31J1160039-02

4) Remove the thermostat (1).

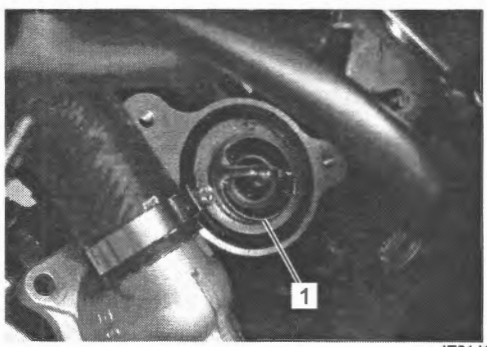

IE31J1160040-02

Installation

Install the thermostat in the reverse order of removal. Pay attention to the following points:

- Install the thermostat (1).

NOTE

The jiggle valve (2) of the thermostat faces upside.

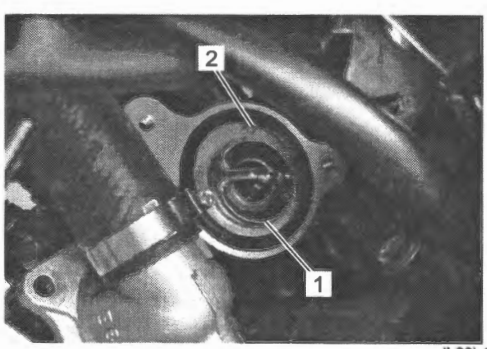

IL06L1160026-01

- Install the thermostat connector cap (1) and tighten the bolts (2) to the specified torque.

  Tightening torque
  Thermostat connector cap bolt (a): 10 N·m (1.0 kgf-m, 7.5 lbf-ft)

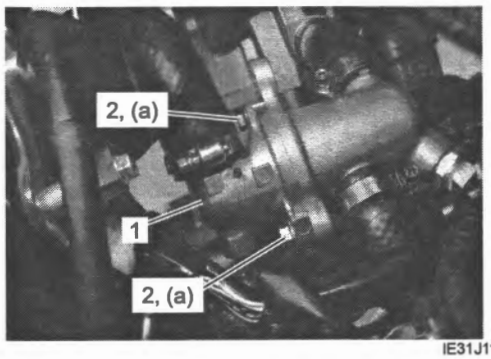

IE31J1160042-02

- Pour engine coolant and bleed air from the cooling system.
  Refer to "Engine Coolant" in Section 0B (Page 0B-16).

Thermostat Inspection

BENL06L21606016

1) Inspect the thermostat pellet for signs of cracking.
2) Test the thermostat at the bench for control action.

NOTE

- **Do not contact the thermostat (1) and the column thermometer (2) with a pan.**
- **As the thermostat operating response to water temperature change is gradual, do not raise water temperature too quickly.**
- **The thermostat with its valve open even slightly under normal temperature must be replaced.**

3) Immerse the thermostat (1) in the water contained in a beaker and note that the immersed thermostat is in suspension.
4) Heat the water by placing the beaker on a heater (3) and observe the rising temperature on a thermometer (2).

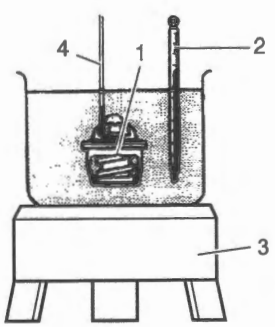

ID26J1160035-04

4. String

5) Read the thermometer just when opening the thermostat. If this reading, which is the temperature level at which the thermostat valve begins to open, is out of the standard value, replace the thermostat with a new one.

Thermostat valve opening temperature
[Standard]: 86.5 – 89.5 °C (188 – 193 °F)

6) Keep on heating the water to raise its temperature.
7) Just when the water temperature reaches specified value, the thermostat valve should have been lifted by at least 8 mm (0.31 in). A thermostat failing to satisfy either of the two requirements (start-to-open temperature and valve lift) must be replaced.

Thermostat valve lift "a"
At 100 °C (212 °F) [Standard]: 8 mm (0.3 in) or more

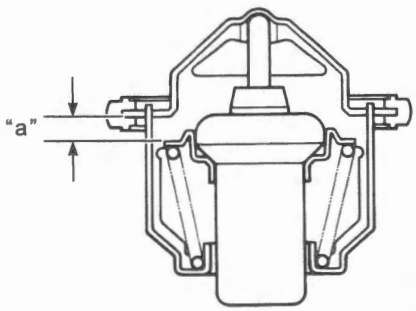

I944H1160022-01

Water Pump Assembly Components

BENL06L21606017

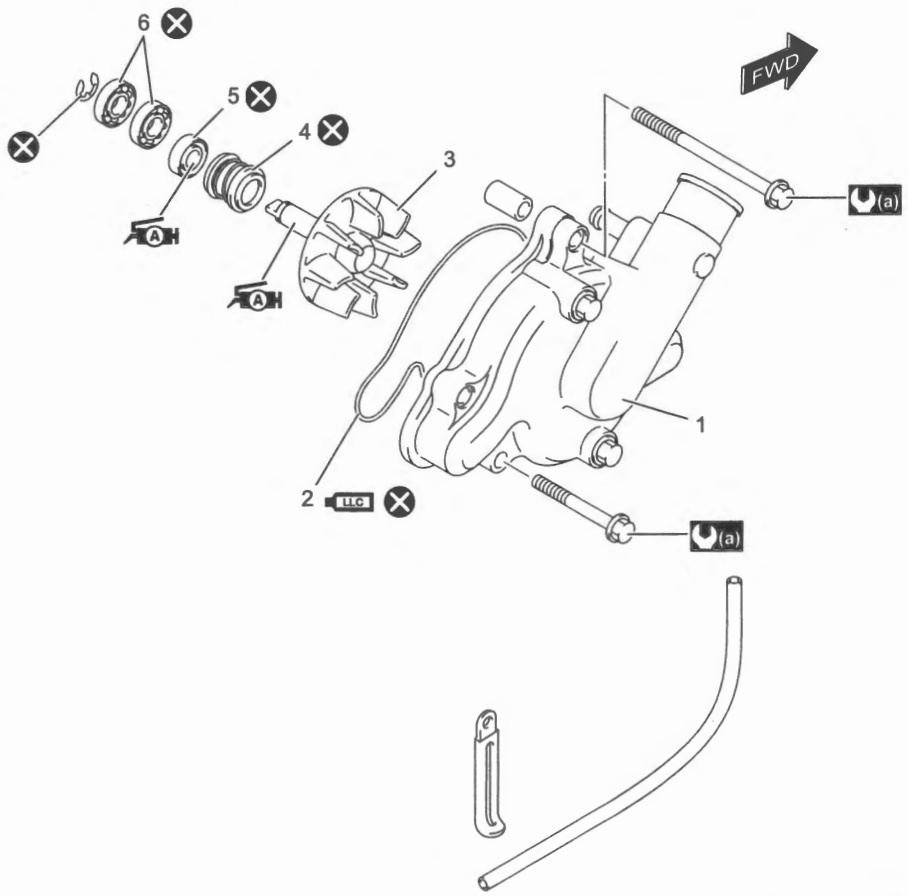

IE31J1160068-03

1. Water pump case	4. Mechanical seal	(a) : 10 N·m (1.0 kgf-m, 7.5 lbf-ft)	: Do not reuse.
2. O-ring	5. Oil seal	: Apply grease.	
3. Impeller	6. Bearing	LLC : Apply engine coolant.	

Water Pump Disassembly and Reassembly

BENL06L21606018

Disassembly

1) Drain the engine oil. ☞(Page 0B-14) ☞(Page 0B-16)
2) Drain the engine coolant. ☞(Page 0B-16)
3) Remove the clutch cover. ☞(Page 5C-15)
4) Remove the water bypass hose (1), radiator outlet hose (2) and air cleaner breather tube (3).

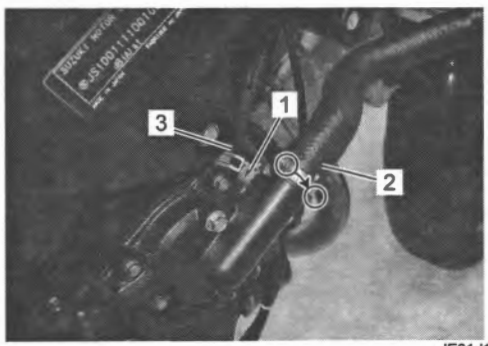

IE31J1160065-02

5) Remove the clutch cover. ☞(Page 5C-15)
6) Remove the bolts (1) and water pump case (2).

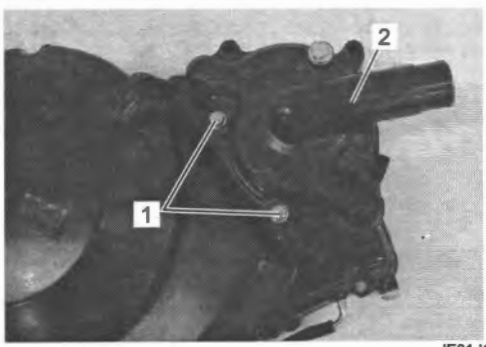

IE31J1160043-01

7) Remove the E-ring (1), pump impeller (2) and dowel pin (3).

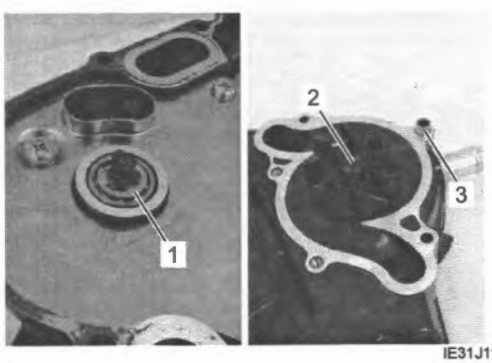

IE31J1160044-01

8) Remove the new O-ring (1).

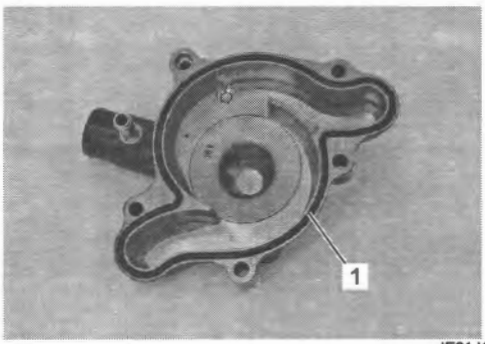

IE31J1160045-01

9) Remove the mechanical seal ring (1) and rubber seal (2).

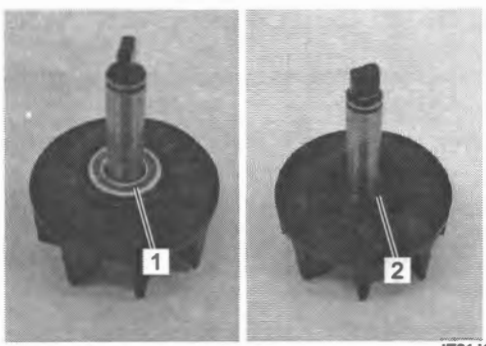

IE31J1160046-01

10) Remove the oil separator (1).

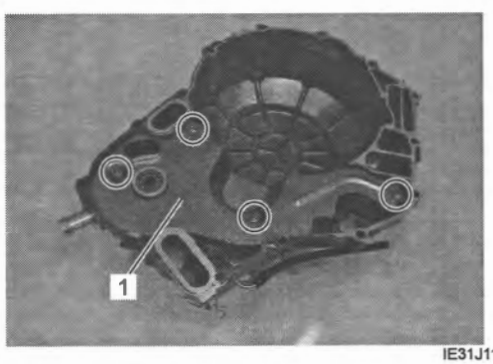

IE31J1160066-01

11) Remove the water pump bearings using the special tool.

Special tool
(A): 09921–20240

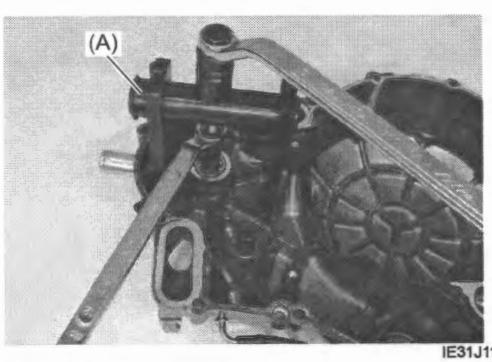

IE31J1160048-01

12) Remove the mechanical seal using the special tool.

Special tool
(A): 09921–20240

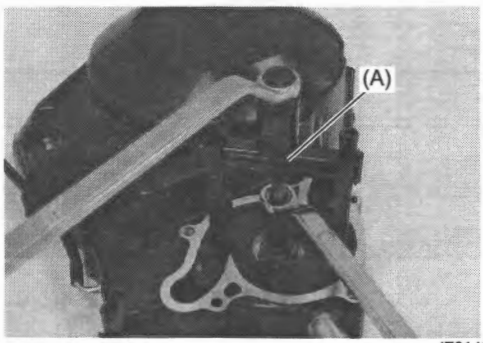

IE31J1160047-01

13) Remove the oil seal (1).

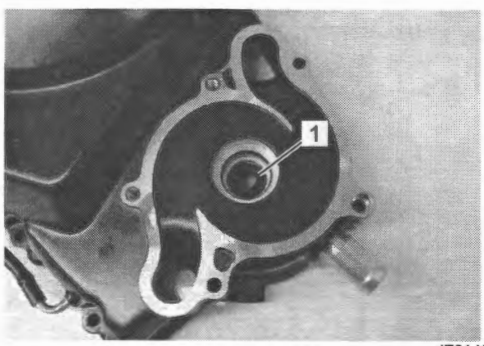

IE31J1160049-01

Reassembly

1) Install the oil separator (1) and tighten the screws (2) to the specified torque.

Tightening torque
Oil separator screw (a): 8.4 N·m (0.86 kgf-m, 6.20 lbf-ft)

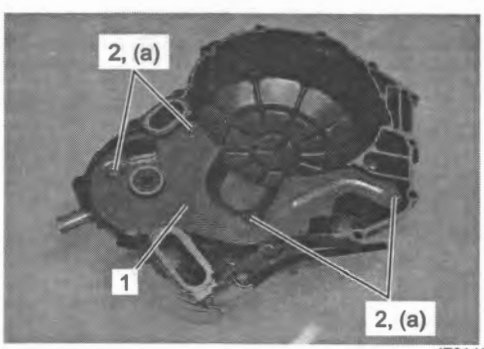

IE31J1160067-01

2) Install the new oil seal using the special tool.

Special tool
(A): 09913–70210

NOTE

The stamped mark on the oil seal faces case side.

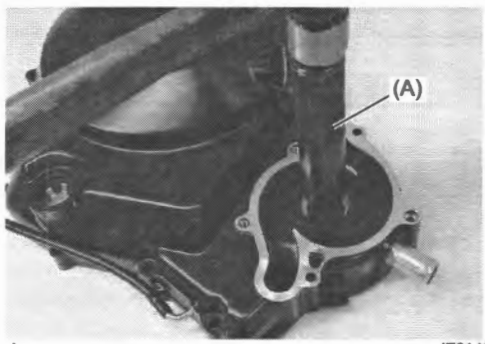

IE31J1160050-01

3) Apply grease to the oil seal lip.

"A": Grease 99000–25011 (SUZUKI SUPER GREASE A)

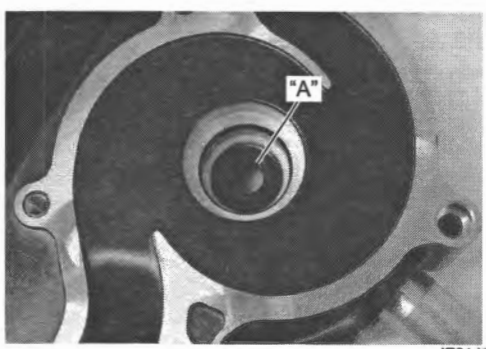

IE31J1160051-01

4) Install the new mechanical seal using a suitable size socket wrench.

NOTE

On the new mechanical seal, the sealer has been applied.

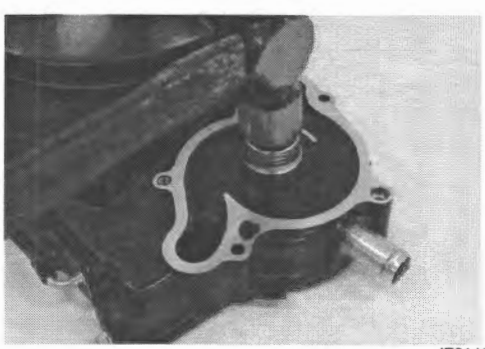

IE31J1160052-01

5) Install the rubber seal (1) into the impeller.
6) After wiping off the oily or greasy matter from the mechanical seal ring, install it into the impeller.

NOTE

- **The paint marked side (2) of the mechanical seal ring faces the impeller.**
- **Make sure the mechanical seal ring is fit into the impeller.**

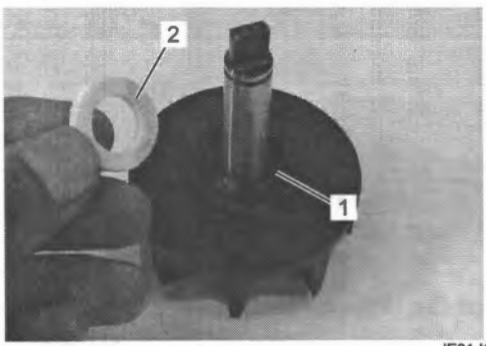

IE31J1160053-01

7) Apply grease to the impeller shaft.

"A": Grease 99000–25011 (SUZUKI SUPER GREASE A)

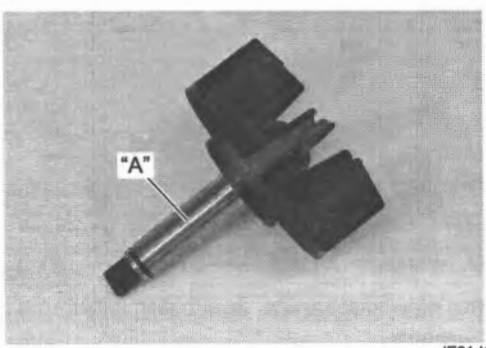

IE31J1160054-01

8) Install the impeller shaft (1).
9) Install the new E-ring (2) to the impeller shaft.

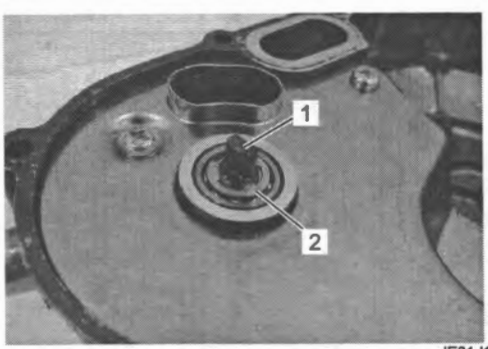

IE31J1160055-01

10) Install the new O-ring (1) to the water pump body (2) and apply engine coolant to it.

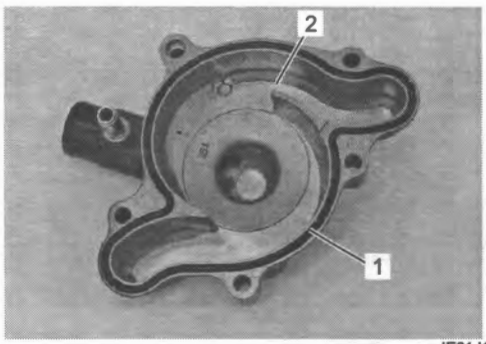

IE31J1160056-01

11) Install the dowel pin (1).

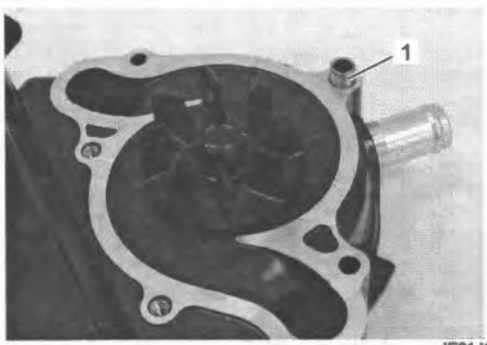

IE31J1160057-01

12) Install the water pump case (1) and tighten the bolts (2) to the specified torque.

Tightening torque
Water pump case bolt (a): 10 N·m (1.0 kgf-m, 7.5 lbf-ft)

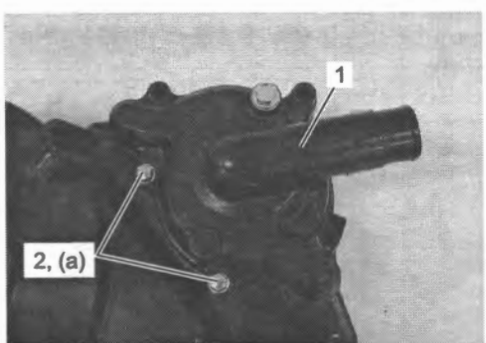

IE31J1160058-01

13) Install the clutch cover. ☞(Page 5C-17)
14) Pour engine coolant. ☞(Page 0B-16)
15) Bleed air from the cooling system. ☞(Page 0B-16)

Water Pump Related Parts Inspection

BENL06L21606019

Refer to "Water Pump Disassembly and Reassembly" (Page 1F-15).

Mechanical Seal

Visually inspect the mechanical seal (1) for damage, with particular attention given to the sealing face.
Replace the mechanical seal (1) that shows indications of leakage.

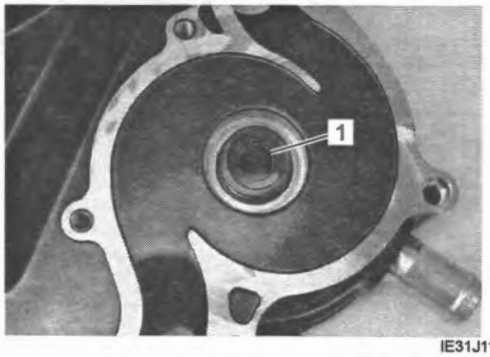

IE31J1160059-01

Oil Seal

Visually inspect the oil seal (1) for damage, with particular attention given to the lip.
Replace the oil seal (1) that shows indications of leakage.

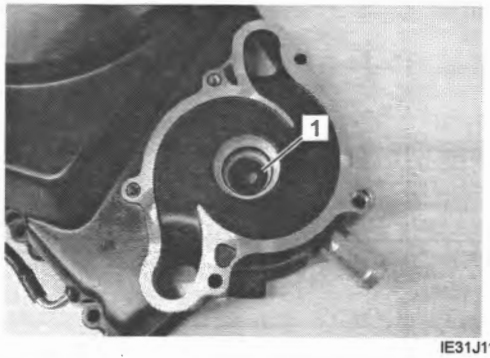

IE31J1160060-01

Bearing

Inspect the play of the outer bearings (1) and inner bearing by hand while it is in the water pump case.
Rotate the inner race by hand to inspect for abnormal noise and smooth rotation.
Replace the bearings (1) if necessary.

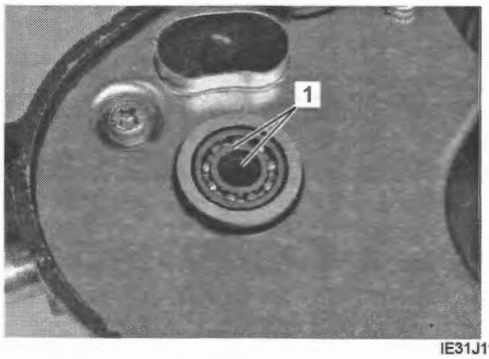

IE31J1160061-03

Impeller

Visually inspect the impeller (1) and its shaft (2) for damage.
Replace the impeller if necessary.

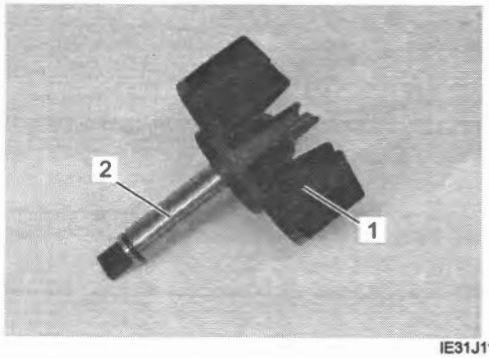

IE31J1160062-01

Specifications

Tightening Torque Specifications

BENL06L21607001

Fastening part	Tightening torque			Note
	N·m	kgf-m	lbf-ft	
Cooling fan assembly mounting bolt	8.4	0.86	6.20	☞(Page 1F-9)
Radiator mounting bolt	10	1.0	7.5	☞(Page 1F-9)
Reservoir tank mounting bolt	6	0.61	4.45	☞(Page 1F-11)
Fuel tank bracket bolt	11	1.1	8.5	☞(Page 1F-11)
Thermostat connector cap bolt	10	1.0	7.5	☞(Page 1F-13)
Oil separator screw	8.4	0.86	6.20	☞(Page 1F-16)
Water pump case bolt	10	1.0	7.5	☞(Page 1F-17)

Reference:
For the tightening torques of fasteners not specified in this page, refer to:
"Water Hose Routing Diagram" (Page 1F-3)
"Water Pump Assembly Components" (Page 1F-14)
"Fasteners Information" in Section 0C (Page 0C-10)

Special Tools and Equipment

Recommended Service Material

BENL06L21608001

Material	SUZUKI recommended product or Specification		Note
Grease	SUZUKI SUPER GREASE A	P/No.: 99000–25011	☞(Page 1F-16) / ☞(Page 1F-17)
Thread lock cement	THREAD LOCK CEMENT 1322D	P/No.: 99000–32150	☞(Page 1F-11)

NOTE

Required service material(s) is also described in:
"Water Pump Assembly Components" (Page 1F-14)

Special Tool

BENL06L21608002

09913–70210
Bearing installer set
☞(Page 1F-16)



09918–78211
Radiator cap tester kit
☞(Page 1F-7) /
☞(Page 1F-7)

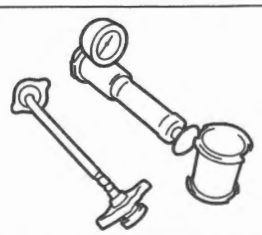

09918–78220
Radiator cap tester adapter
☞(Page 1F-7) /
☞(Page 1F-7)

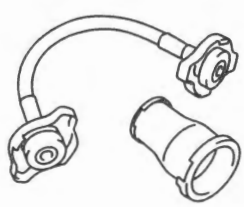

09921–20240
Bearing remover set
☞(Page 1F-15) /
☞(Page 1F-16)

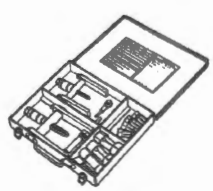

Fuel System

Precautions

Precautions for Fuel System

BENL06L21700001

⚠ WARNING

- **Keep away from fire or spark.**
- **During disassembling, use care to minimize spillage of gasoline.**
- **Spilled gasoline should be wiped off immediately.**
- **Work in a well-ventilated area.**
- **Before loosening or disconnecting the fuel feed line, relieve the fuel system of fuel pressure by following "Fuel Pressure Relief Procedure" (Page 1G-3).**

⚠ CAUTION

- **To prevent the fuel system (fuel tank, fuel hose, etc.) from contamination with foreign particles, blind all openings.**
- **After removing the throttle body, tape the cylinder intake section to prevent foreign particles from entering.**

Diagnostic Information and Procedures

Fuel System Symptom Diagnosis

BENL06L21704001

Refer to "Engine Symptom Diagnosis" in Section 1A (Page 1A-25).

Repair Instructions

Fuel Tank Water Drain Hose and Breather Hose Routing Diagram

BENL06L21706001

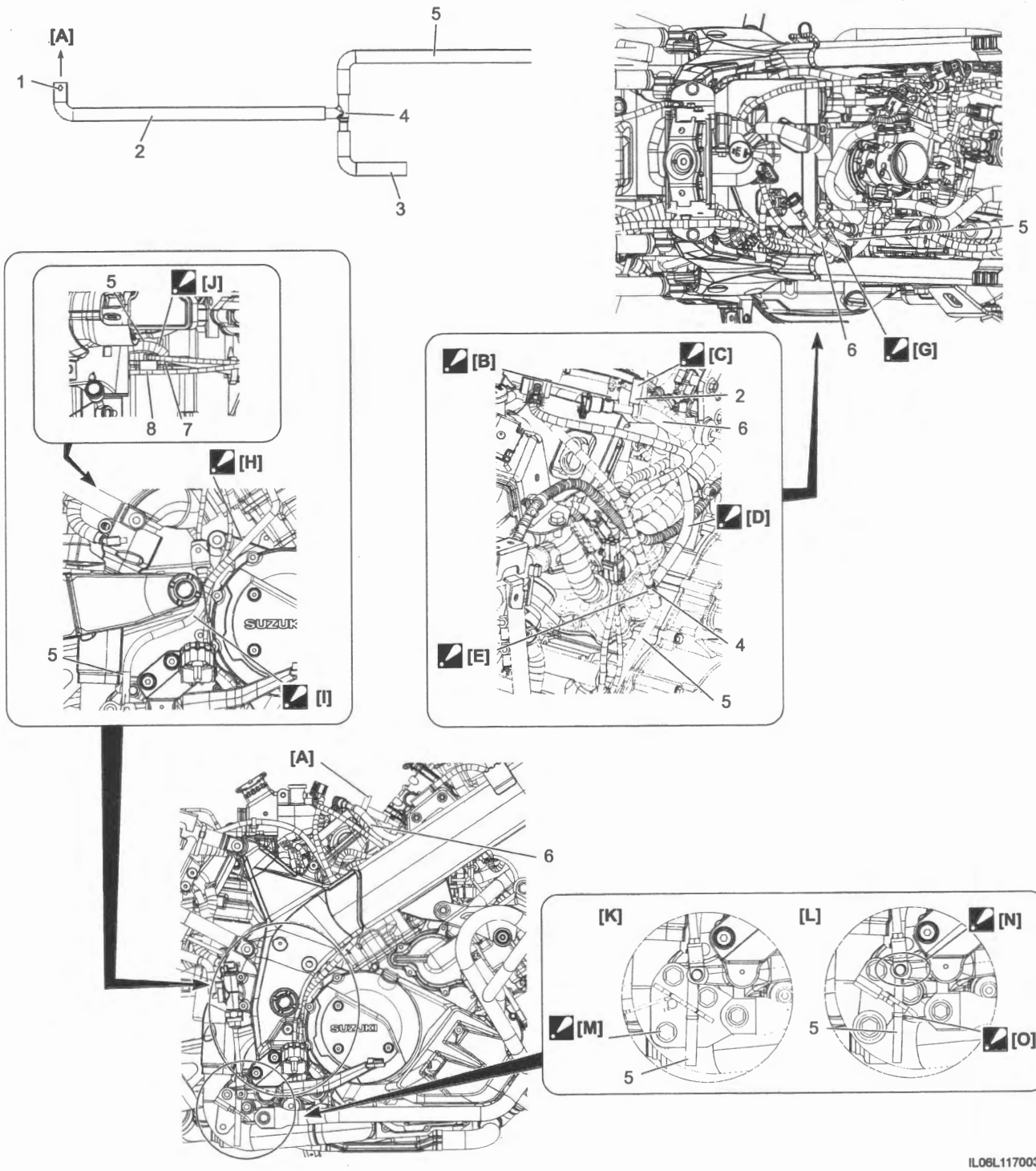

IL06L1170030-03

[A]: To fuel tank	[I]: Pass the fuel tank drain hose No.2 under the swingarm.	2. Fuel tank drain hose No. 1
[B]: Pass the fuel tank breather hose No.1 between the cylinder head and wiring harness.	[J]: Pass the fuel tank drain hose No.2 inside of the GP switch lead wire.	3. Reserver tank overflow hose
[C]: Face the white mark outside.	[K]: For center stand model	4. Fuel tank drain 3 way joint
[D]: Pass the fuel tank drain hose No.1 between the fuel feed hose and wiring harness.	[L]: For non center stand model	5. Fuel tank drain hose No. 2
[E]: Connect the reservoir tank overflow hose to the narrow shaped side of joint.	[M]: Do not touch the hoses to the bracket bolt.	6. Fuel feed hose
[F]: Align the hose clamp with the marking on the hoses. Point the end of the clamp downward, and then cut off the excess end of the clamp.	[N]: Pass the fuel tank drain hose No.2 inside of the brake pedal.	7. GP switch lead wire
[G]: Pass the fuel tank drain hose No.1 inside of the fuel feed hose.	[O]: Set the mark of the fuel tank drain hose No.2 under the guide.	8. HO2 sensor lead wire
[H]: Pass the fuel tank drain hose No.2 between the engine mounting part and wiring harness.	1. White mark	

Fuel Pressure Relief Procedure

BENL06L21706002

NOTICE

Performing this procedure when the engine is still hot can damage the catalyst. Wait until the engine has cooled down before performing this procedure.

1) Check that the engine is cold.
2) Disconnect the fuel pump coupler. ☞(Page 1G-7)
3) Start the engine and run it until the engine stops for lack of the fuel. Repeat cranking the engine 2 – 3 times for about 3 seconds each time to dissipate the fuel pressure in line. Fuel connections are now safe for servicing.
4) After servicing, install the removed parts.

Fuel Feed Hose Disconnection and Reconnection

BENL06L21706003

Disconnection

1) Lift and support the fuel tank. ☞(Page 1G-7)
2) Place a rag over the fuel feed hose.
3) Relieve fuel pressure. ☞(Page 1G-3)
4) Pull the retainer (1).
5) Disconnect the fuel feed hose joint (2) from fuel pipe.

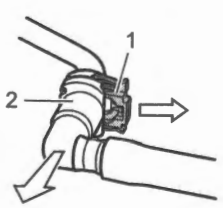

IE31J1170034-01

Reconnection

1) Insert the fuel feed hose joint (1) to fuel pipe.
2) Lock the retainer (2).

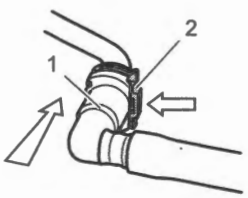

IE31J1170035-01

3) Confirm that fuel feed hose joint is not disconnected by hand.

Fuel Pressure Inspection

BENL06L21706004

1) Lift and support the fuel tank. ☞(Page 1G-7)
2) Place a rag over the fuel feed hose and disconnect fuel feed hose (1). ☞(Page 1G-3)

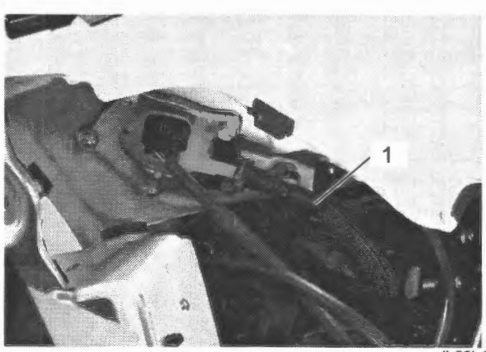

IL06L1170002-04

3) Install the special tools between the fuel pump and fuel feed hose.

Special tool
(A): 09940–40211
(B): 09940–40220
(C): 09915–77331
(D): 09915–74521

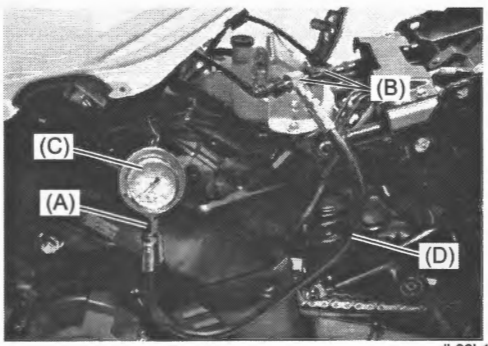

IL06L1170003-01

4) Turn the ignition ON and check for fuel pressure.
If the fuel pressure is lower than the specification, check for the followings:
- Fuel hose leakage
- Clogged fuel filter
- Pressure regulator
- Fuel pump

If the fuel pressure is higher than the specification, check for the followings:
- Fuel pump
- Pressure regulator

Fuel pressure
[Standard]: 289 – 299 kPa (2.9 – 3.0 kgf/cm², 41.9 – 43.3 psi)

5) Remove the special tools.

⚠ WARNING

Before removing the special tools, turn the ignition switch OFF and release the fuel pressure slowly.

6) After finishing the fuel pressure inspection, install the removed parts.

Fuel Discharge Amount Inspection

BENL06L21706005

1) Lift and support the fuel tank. ☞(Page 1G-7)
2) Place a clean rag under the fuel feed hose (1) and disconnect the fuel feed hose. ☞(Page 1G-3)

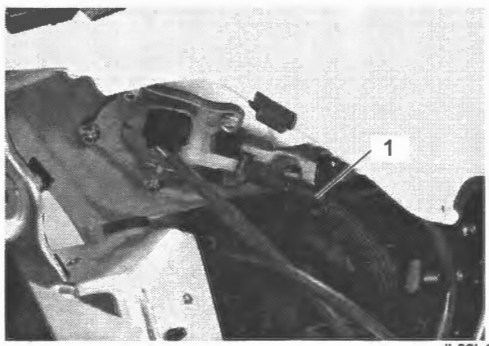

IL06L1170002-04

3) Place the measuring cylinder (1) and insert the fuel feed hose (2) into the measuring cylinder.

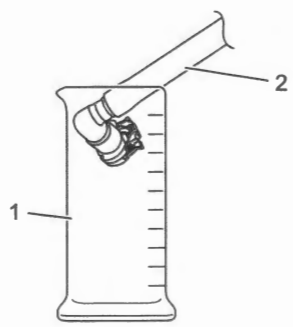

IK31K1170043-01

4) Disconnect the fuel pump coupler (1).
5) Connect proper lead wires to the fuel pump.
Apply 12 V to fuel pump (between "T1" and "T2") for 10 seconds and measure the amount of fuel discharged.
If the discharge amount is out of the specification, the following cause may be considered
Disconnect the fuel pump coupler (1).

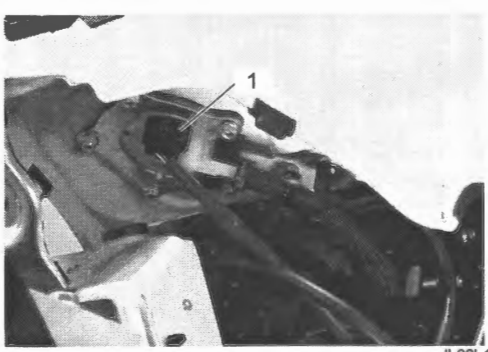

IL06L1170031-02

Possible cause	Wire color
Clogged fuel filter	Replace
Defective fuel pump	Replace

Battery (+) terminal – "T1"
Battery (–) terminal – "T2"

NOTE

The battery must be in fully charged condition.

FP discharge amount

Per 10 seconds [Standard]: 166 ml (5.61 US oz, 5.84 Imp oz) or more

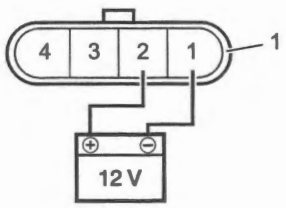

IL06L1170032-01

6) After finishing the fuel discharge inspection, reinstall the removed parts.

Fuel Feed Hose Removal and Installation

BENL06L21706006

For removal and installation procedure, refer to "Fuel Hose" in Section 0B (Page 0B-11). And if necessary, replace the fuel feed hose with a new one.

Fuel Hose Inspection

BENL06L21706007

Refer to "Fuel Hose" in Section 0B (Page 0B-11).

Fuel Tank Components

BENL06L21706008

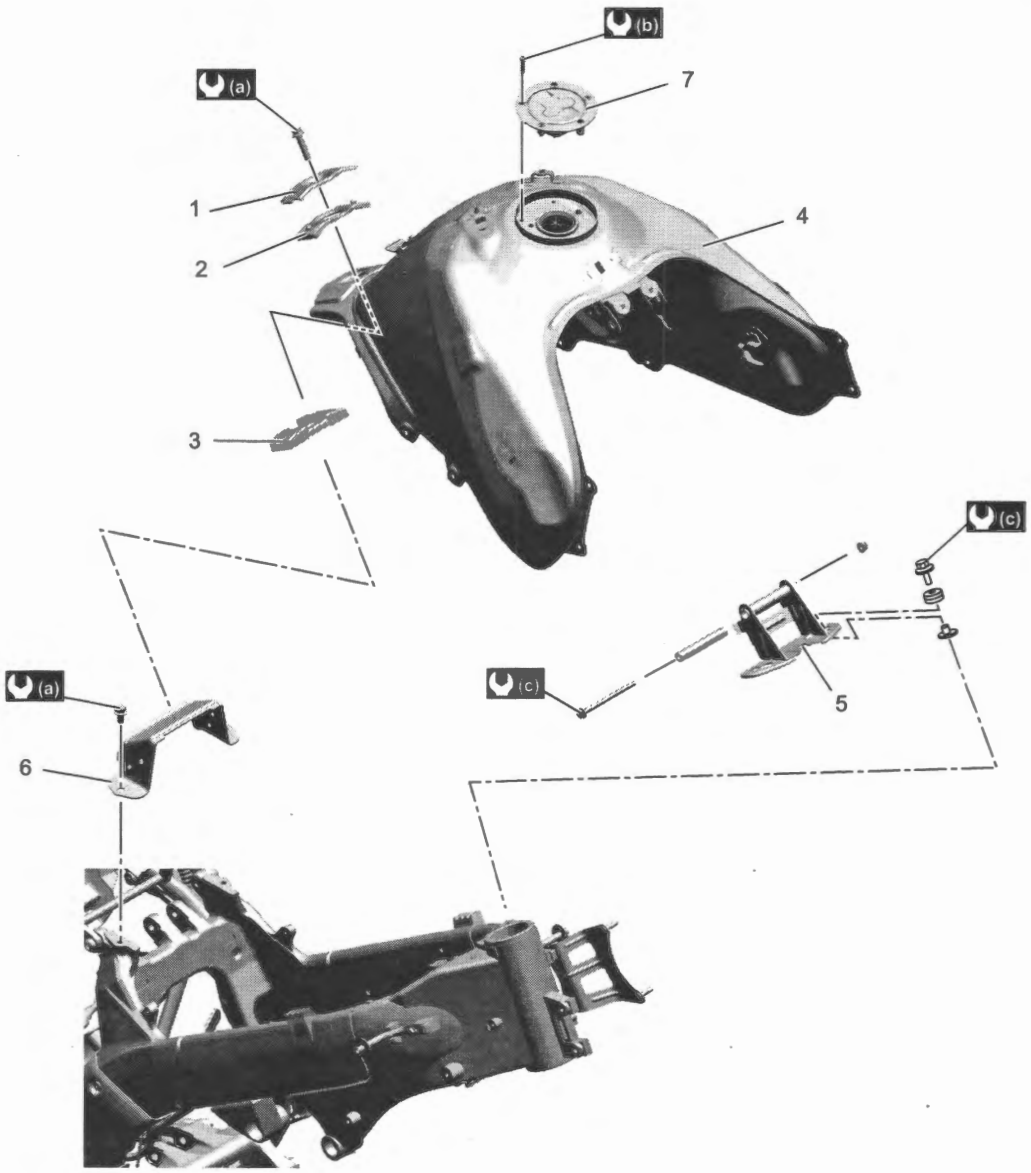

IL06L1170005-02

1. Fuel tank mount stay	5. Fuel tank front bracket	(b) : 3.0 N·m (0.31 kgf-m, 2.25 lbf-ft)
2. Upper cushion	6. Fuel tank rear bracket	(c) : 10 N·m (1.0 kgf-m, 7.5 lbf-ft)
3. Lower cushion	7. Fuel tank filler cap	
4. Fuel tank	(a) : 23 N·m (2.3 kgf-m, 17.0 lbf-ft)	

Fuel Tank Molding Construction

BENL06L21706009

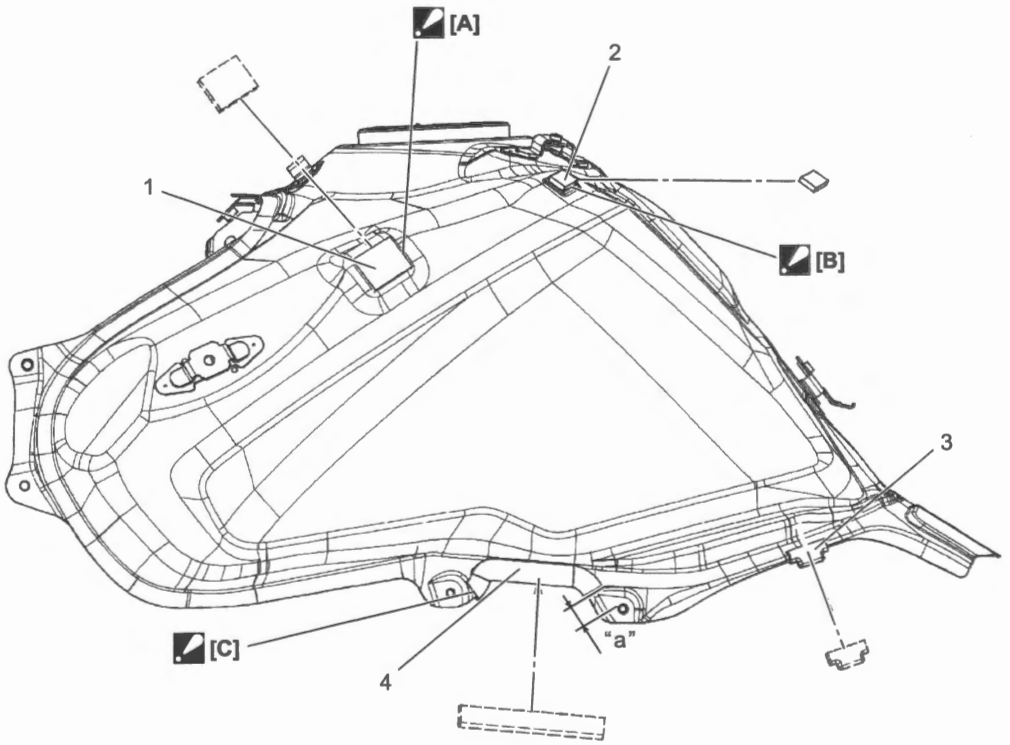

IL06L1170006-01

[A]: Clean the adhesive surface before sticking the fastener. Align the fastener with the projection of fuel tank. Press the fastener after sticking.	1. Fuel tank side cover fastener	4. Fuel tank side cover molding
[B]: Clean the adhesive surface before sticking the cushion. Align the cushion with the projection of fuel tank. Press the fastener after sticking.	2. Fuel tank side cover cushion No.1	"a": 12 mm (0.5 in)
[C]: Align the molding with r-edge of fuel tank.	3. Fuel tank side cover cushion No.2 Apply adhesive to the fuel tank side cover cushion No.2.	

Fuel Tank Cap Removal and Installation

BENL06L21706010

Removal

1) Open the fuel tank cap with the ignition key.
2) Remove the fuel tank cap (1) from the fuel tank.

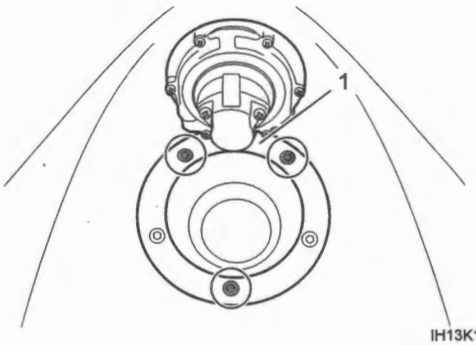

IH13K1170066-06

Installation

Install the fuel tank filler cap in the reverse order of removal. Pay attention to the following point:

- Tighten the fuel tank filler cap bolts (1) to the specified torque.

Tightening torque
Fuel tank filler cap bolt (a): 3.0 N·m (0.31 kgf-m, 2.25 lbf-ft)

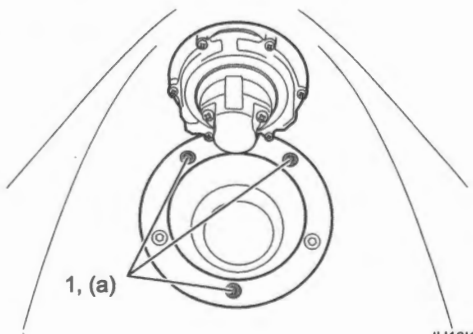

IH13K1170067-04

Fuel Tank Removal and Installation

BENL06L21706011

Removal

1) Remove the following parts.
   - Frame front cover ☞(Page 9D-30)
   - Side cover assembly ☞(Page 9D-33)
   - Side inner upper cover ☞(Page 9D-36)
2) Remove the fuel tank rear mounting bolt (1), fuel tank mount stay (2) upper cushion (3) and lower cushion (4) from the fuel tank.

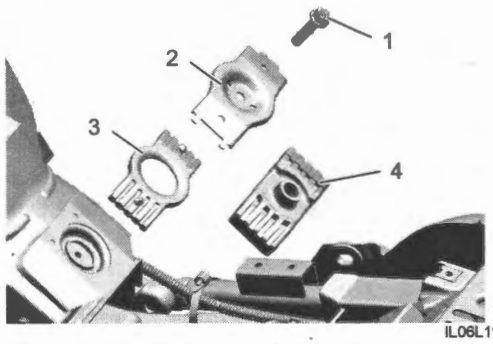

IL06L1170007-02

3) Lift and support the fuel tank with the fuel tank mount stay (1).

NOTICE

Lifting up the fuel tank by force can damage the hoses and wiring harness.

4) Disconnect the fuel pump lead wire coupler (2) from the fuel pump.
5) Place a clean rag under the fuel feed hose (3) and disconnect the fuel feed hose. ☞(Page 1G-3)
6) Disconnect the fuel tank breather hose (4) and fuel tank water drain hose (5) from the fuel tank.

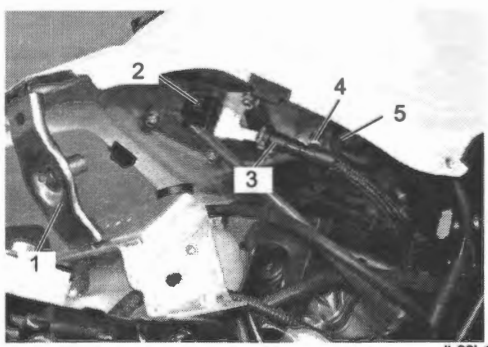

IL06L1170008-02

7) Remove the fuel tank nut (1) and bolt (2) from the fuel tank.

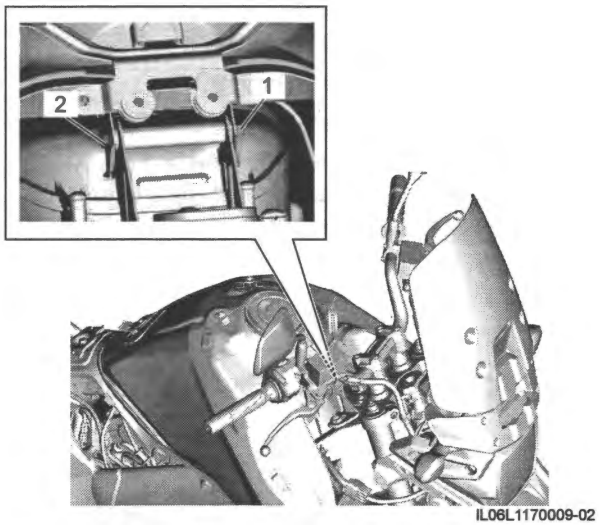

IL06L1170009-02

Installation

Install the fuel tank in the reverse order of removal. Pay attention to the following points:

- Connect the fuel tank water drain hose and fuel tank breather hose. ☞(Page 1G-2)

NOTICE

Be sure not to bend or twist the hoses when installing.

- Tighten the fuel tank front mounting bolt (1) to the specified torque.

Tightening torque
Fuel tank front mounting bolt (a): 10 N·m (1.0 kgf-m, 7.5 lbf-ft)

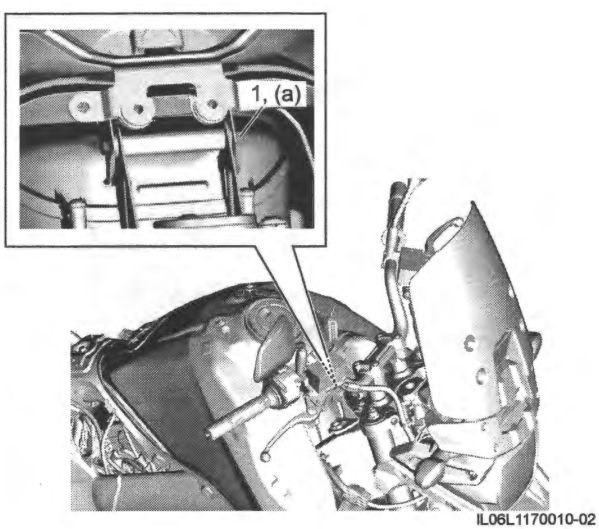

IL06L1170010-02

- Tighten the fuel tank rear mounting bolt (1) to the specified torque.

Tightening torque
Fuel tank rear mounting bolt (a): 23 N·m (2.3 kgf-m, 17.0 lbf-ft)

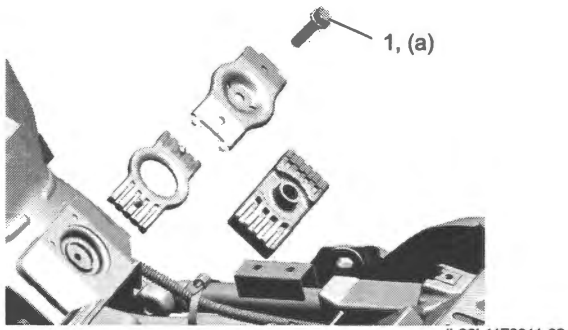

IL06L1170011-02

Fuel Pump Components

BENL06L21706012

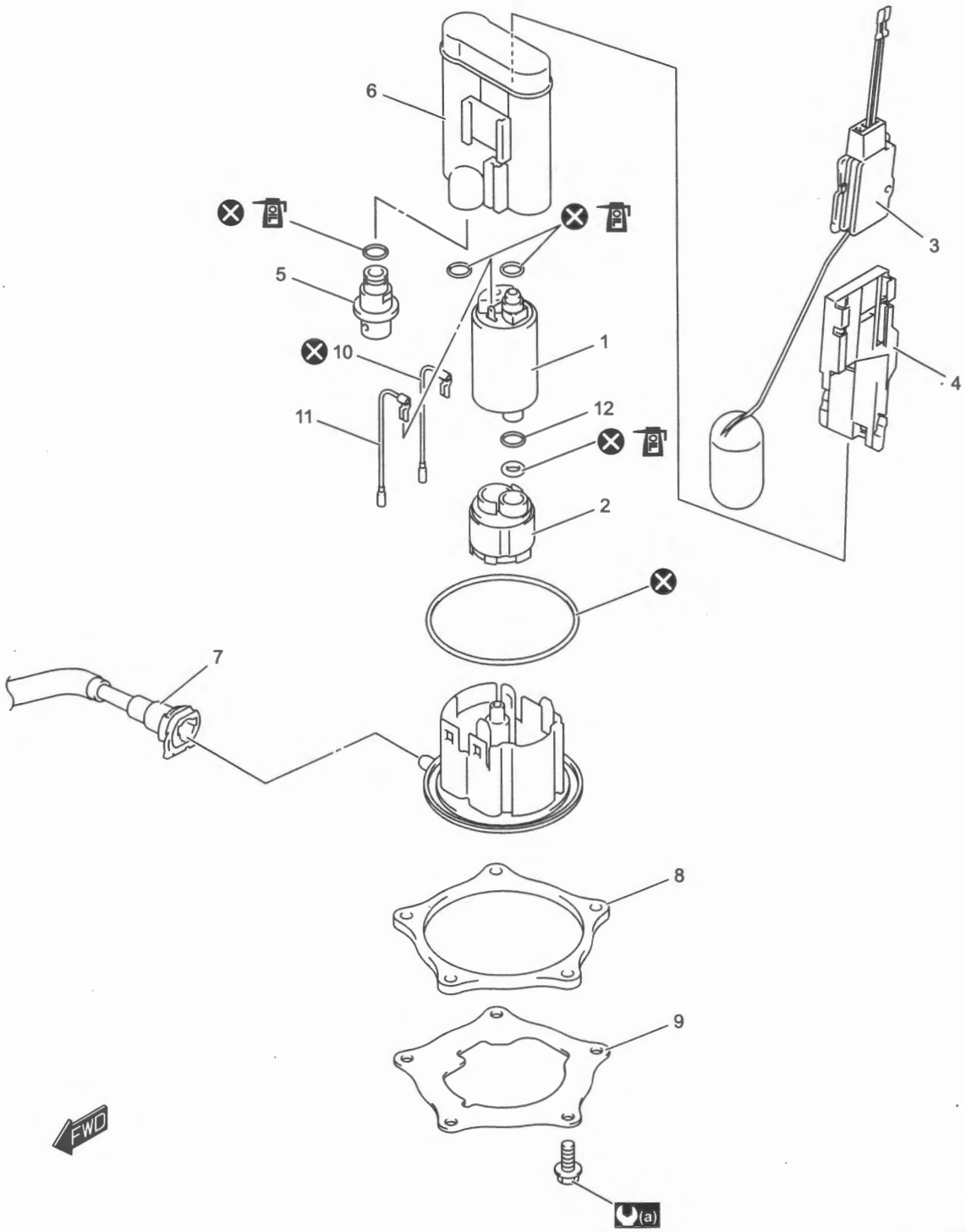

IL06L1170035-01

1. Fuel pump	6. Reservoir cup	11. Fuel level sender gauge (–) lead wire
2. Fuel filter	7. Fuel feed hose No. 1	12. Spacer
3. Fuel level sender gauge	8. Fuel pump inner plate	(a) : 10 N·m (1.0 kgf-m, 7.5 lbf-ft)
4. Fuel level sender gauge attachment	9. Fuel pump outer plate	: Apply engine oil.
5. Fuel pressure regulator	10. Fuel level sender gauge (+) lead wire	: Do not reuse.

Fuel Pump On-Vehicle Inspection

BENL06L21706013

Turn the ignition switch ON and check that the fuel pump operates for a few seconds.
If the fuel pump motor does not make operating sound, inspect the fuel pump circuit connections, the fuel pump relay and TO sensor.

- Fuel pump relay: ☞(Page 1G-15)
- TO sensor: ☞(Page 1A-89)

If the fuel pump relay, TO sensor and fuel pump circuit connections are OK, the fuel pump may be faulty, replace the fuel pump with a new one. ☞(Page 1G-10)

Fuel Pump Assembly Removal and Installation

BENL06L21706014

Removal

1) Remove the fuel tank. ☞(Page 1G-7)
2) Remove the fuel pump mounting bolts (1) diagonally and remove the fuel pump outer plate (2), fuel pump inner plate and fuel pump assembly (3) from the fuel tank.

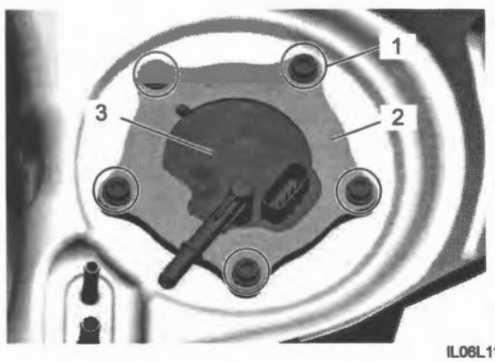

IL06L1170013-02

3) Remove the O-ring (1) from the fuel pump.



IL06L1170014-04

4) Remove the fuel tank vessel (1).

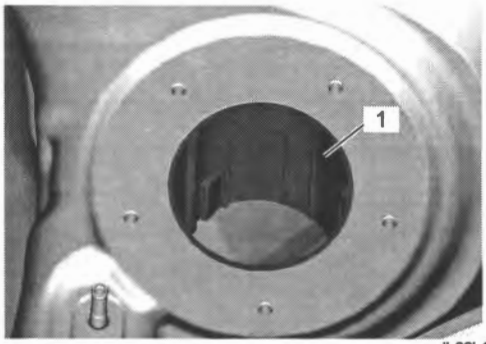

IL06L1170036-01

Installation

Install the fuel pump assembly in the reverse order of removal. Pay attention to the following points:

- Align the groove (1) of the fuel tank vessel with the protrusion (2) of the fuel tank.

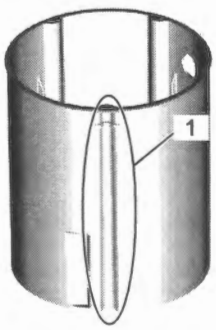

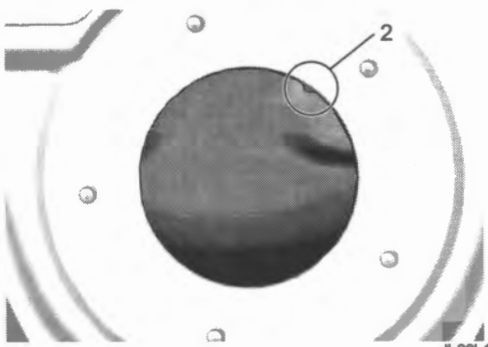

IL06L1170037-01

- Install the fuel tank vessel (1) to the fuel tank, and then make sure that the do not level the bottom end (2) of fuel tank vessel outward from the fuel tank seal surface (3).

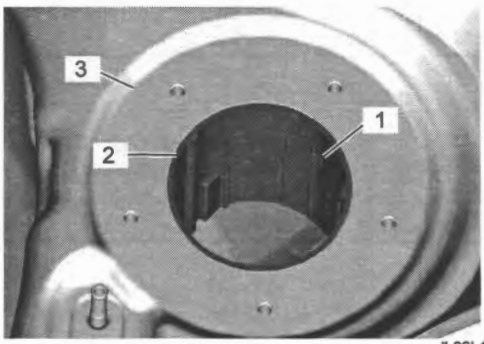

IL06L1170038-01

- Install the new O-ring (1) to the fuel pump.



IL06L1170014-04

- When install the fuel pump to fuel tank, set the fuel pump terminal (1) between the projections (2) of fuel tank vessel.

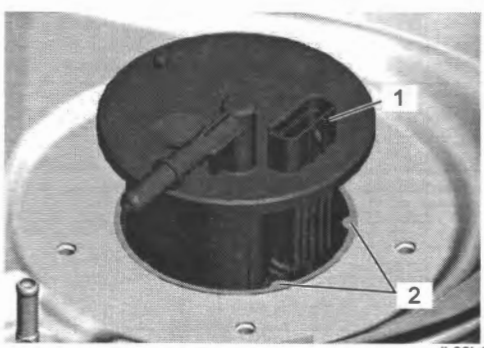

IL06L1170033-01

- Install the fuel pump inner plate (1) align protrusion (2) of fuel pump with the punch mark (3) of inner plate.

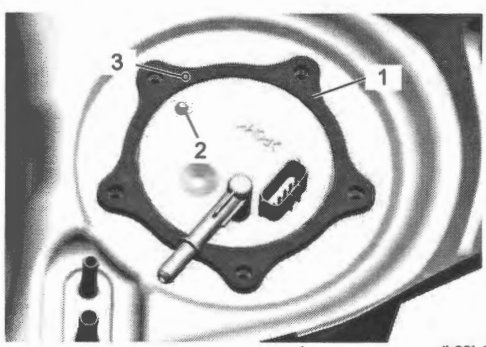

IL06L1170016-02

- Install the fuel pump outer plate (1) align protrusion (2) of fuel pump with the groove (3) of outer plate.

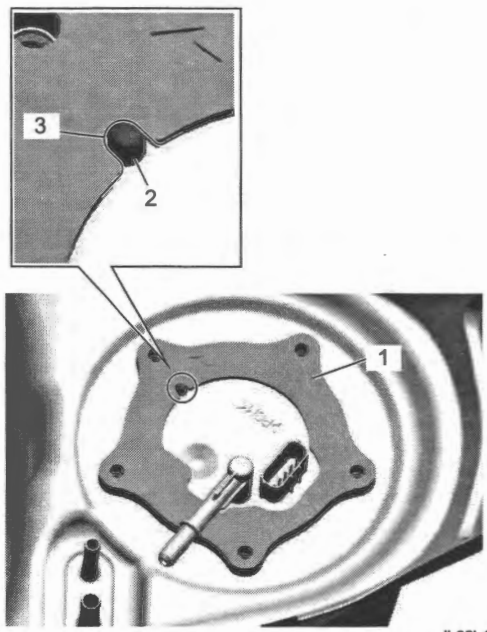

IL06L1170015-02

- Install the fuel pump assembly (1) and first tighten all the fuel pump mounting bolts (2) lightly in the ascending order and then tighten them to the specified torque in the figure.

Tightening torque
Fuel pump mounting bolt (a): 10 N·m (1.0 kgf-m, 7.5 lbf-ft)

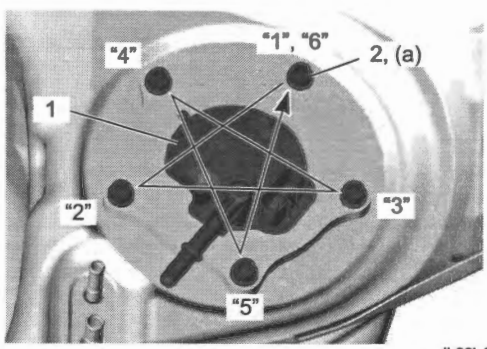

IL06L1170017-02

Fuel Pump Disassembly and Reassembly

BENL06L21706015

Refer to "Fuel Pump Assembly Removal and Installation" (Page 1G-10).

Disassembly

1) Remove the fuel level sender gauge as follows:
   a) Disconnect the fuel level sender gauge lead wires (1) from the fuel pump.

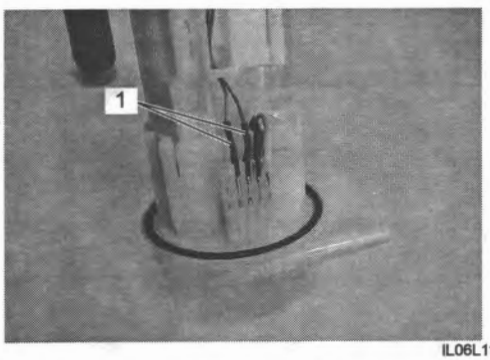

IL06L1170018-02

   b) Unhook the hooks (1) and slide the fuel level sender gauge (2) arrow direction as shown in the figure.

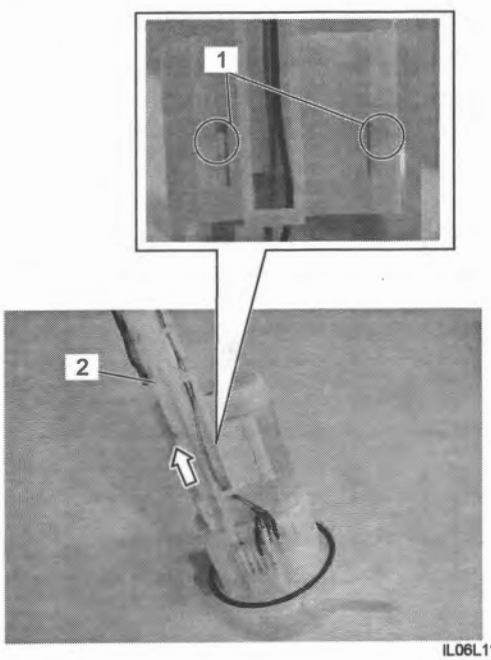

IL06L1170019-02

   c) Unhook the hooks (1) and slide the fuel level sender gauge (2) from the fuel level sender gauge attachment (3) arrow direction as shown in the figure.

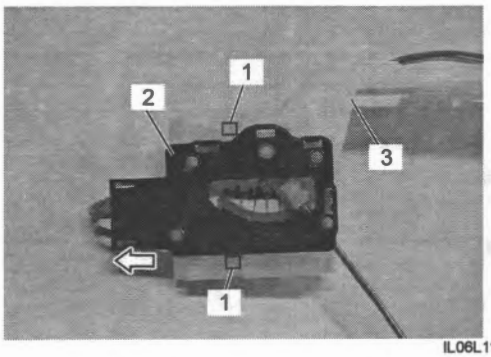

IL06L1170020-02

2) Disconnect the fuel pump lead wires (1).
3) Unhook the hooks (2) and remove the flange (3).

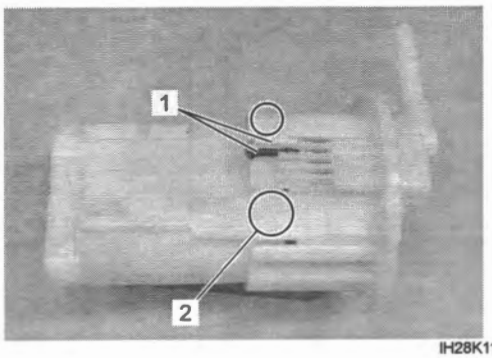

IH28K1170034-01

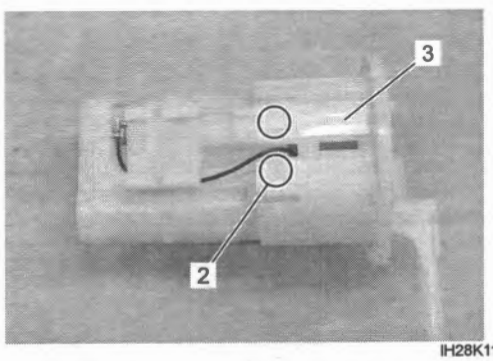

IH28K1170035-01

4) Remove the O-ring (1) from the flange.

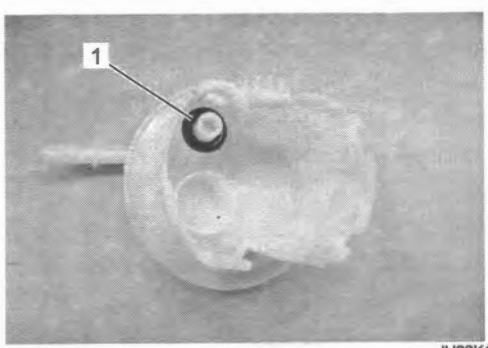

IH28K1170036-01

5) Remove the fuel filter (1).

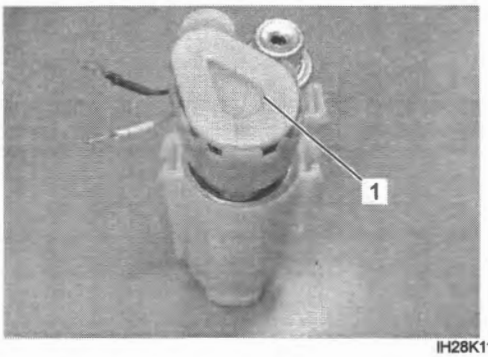

IH28K1170037-01

6) Remove the fuel pump as follows:

a) Remove the fuel pump (1).

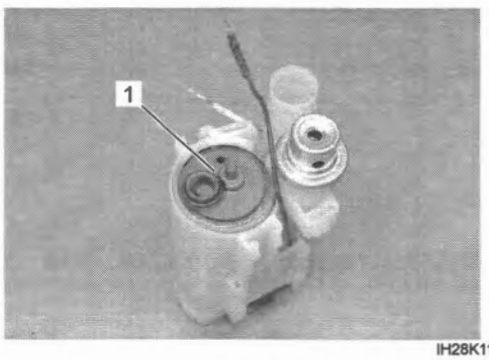

IH28K1170038-01

b) Remove the O-rings (1) and spacer (2).

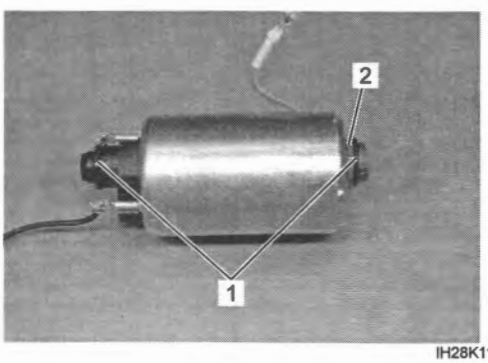

IH28K1170039-01

c) Disconnect the lead wires (1).

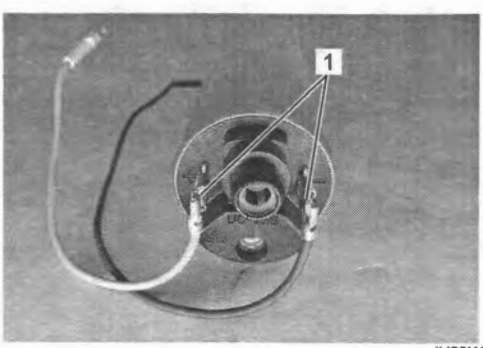

IH28K1170040-01

7) Remove the fuel pressure regulator (1).

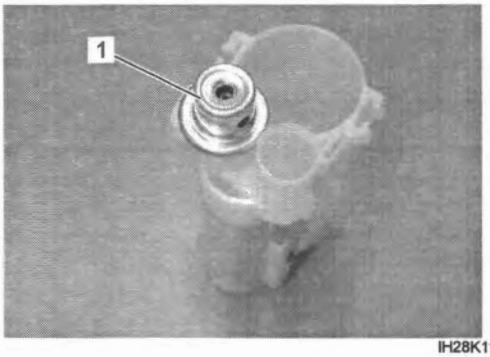

IH28K1170041-01

8) Remove the O-ring (1).

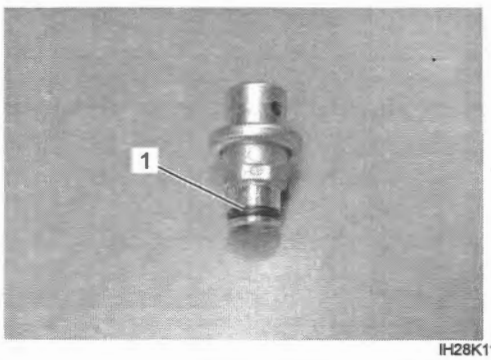

IH28K1170042-01

Reassembly

Reassemble the fuel pump in the reverse order of the disassembly. Pay attention to the following points:

- Replaced the removed fuel pump (+) lead wire (1) with the new ones.

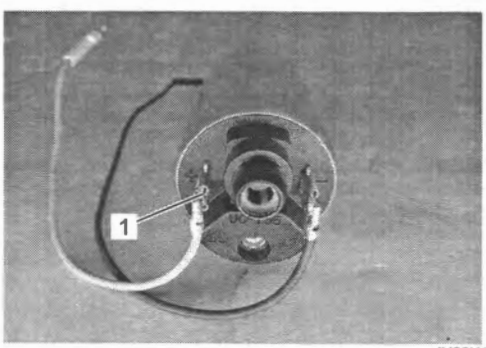

IH28K1170043-01

- Apply engine oil lightly to the new O-rings (1) and install them.

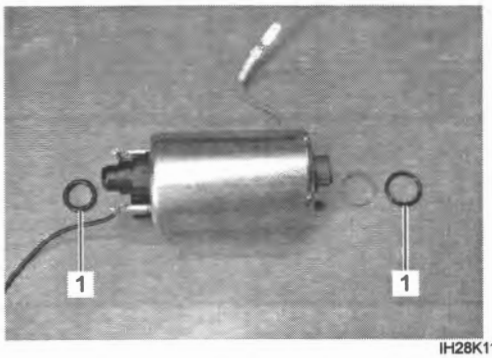

IH28K1170044-01

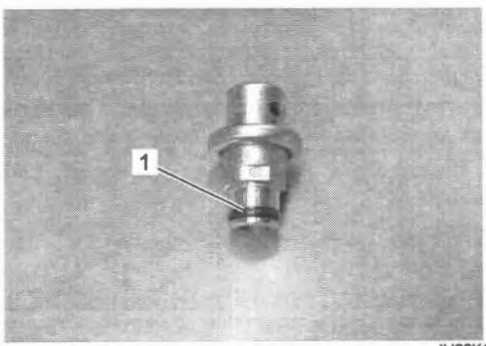

IH28K1170042-01

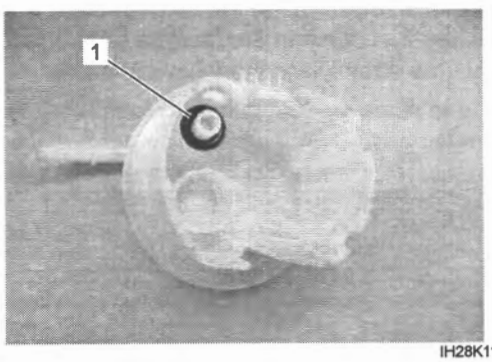

IH28K1170036-01

- Connect all lead wires securely so as not to cause contact failure.
- Route all lead wires securely.

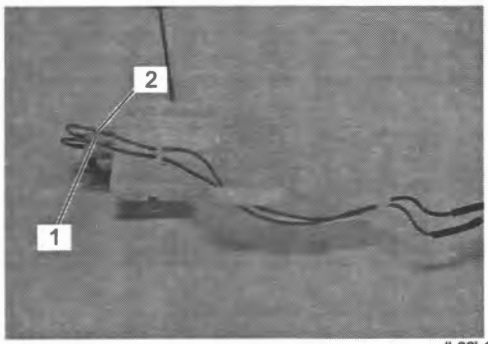

IL06L1170021-02

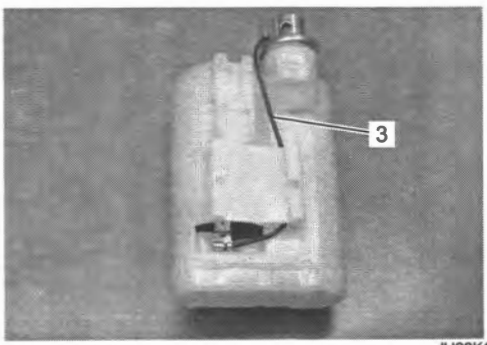

IH28K1170046-01

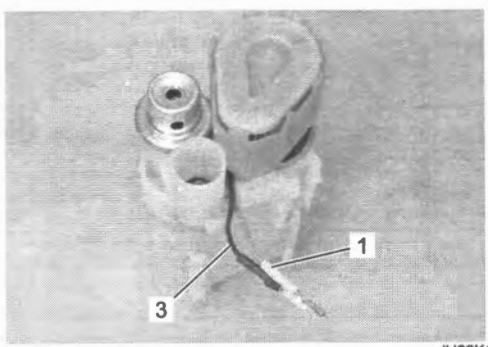

IH28K1170047-01

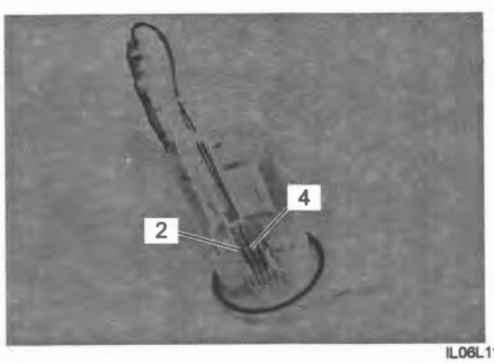

IL06L1170022-01

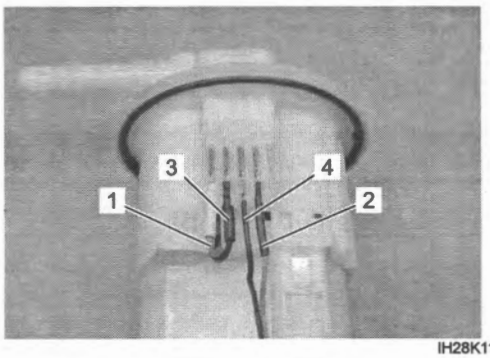

IH28K1170049-02

1.	Fuel pump (+) lead wire (BI)
2.	Fuel level sender gauge (+) lead wire (R)
3.	Fuel pump (–) lead wire (B)
4.	Fuel level sender gauge (–) lead wire (B)

Fuel Filter Inspection

BENL06L21706016

Refer to "Fuel Pump Disassembly and Reassembly" (Page 1G-12).
Inspect the fuel filter for dirt. If the fuel filter is dirtied excessively, replace the fuel filter with a new one.

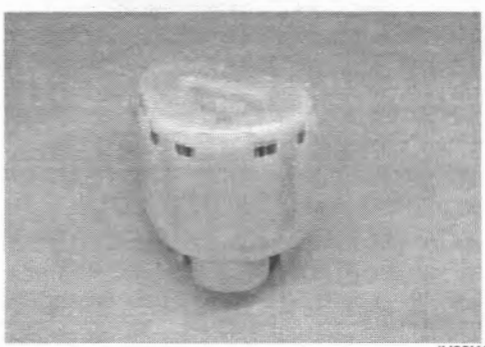

IH28K1170050-01

Fuel Level Gauge Inspection

BENL06L21706017

Refer to "Fuel Pump Assembly Removal and Installation" (Page 1G-10).
Measure the resistance at each fuel level sender gauge in float position. If the resistance is incorrect, replace fuel level sender gauge with a new one.

Float position		Resistance
"a"	82.9 – 91.9 mm (3.264 – 3.618 in)	8 – 12 Ω
"b"	118.6 – 127.6 mm (4.669 – 5.024 in)	267 – 273 Ω

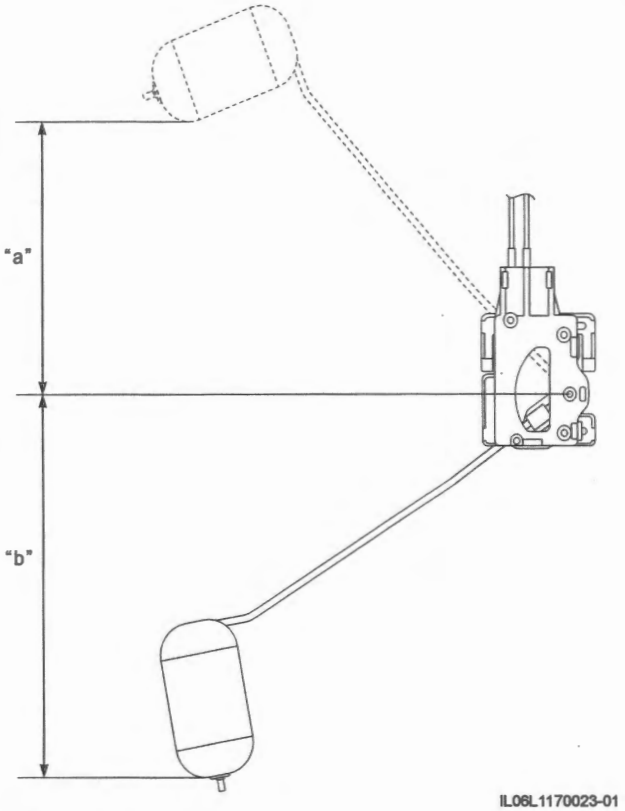

IL06L1170023-01

Fuel Pump Relay Inspection

BENL06L21706018

Refer to "Fuel Pump Relay Removal and Installation" (Page 1G-16)
Check the fuel Pump relay in the following procedures. If abnormality is found, replace the relay box (1) with a new one.

1) Check that there is no continuity between terminals "T24" and "T18".
2) Check that there is continuity between terminals "T1" and "T7".
3) Connect battery positive (+) terminal and negative (–) terminal between terminals "T1" and "T7" and check for continuity between terminals "T24" and "T18".

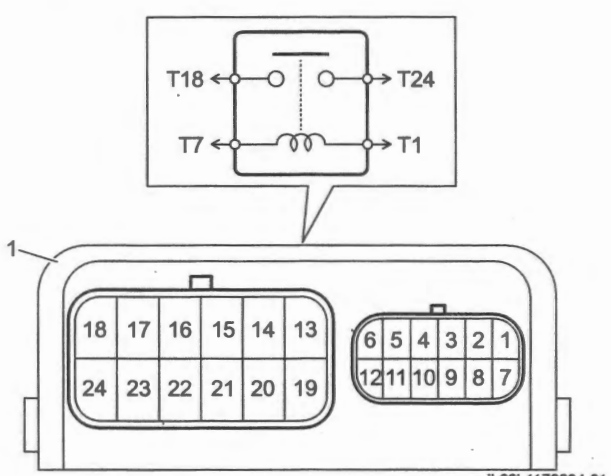

IL06L1170034-01

Fuel Pump Relay Removal and Installation

BENL06L21706019

Refer to "Relay Box Removal and Installation" in Section 9A (Page 9A-42).

Fuel Injector On-Vehicle Inspection

BENL06L21706020

1) Turn the ignition switch OFF.
2) Remove the air cleaner box. ☞(Page 1D-6)
3) Disconnect the fuel injector couplers (1) from the throttle bodies.

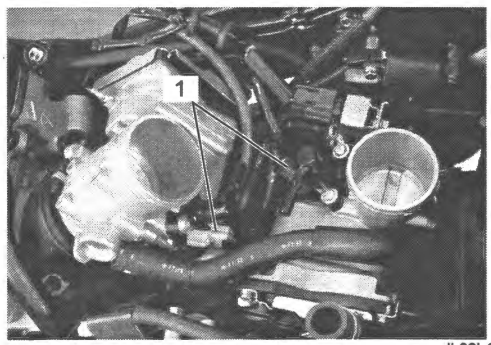

IL06L1170024-01

4) Measure the fuel injector resistance between terminals. If resistance is out of specification, replace the fuel injector with a new one. "Fuel Injector Removal and Installation" (Page 1G-16)

Fuel injector resistance
20 °C (68 °F) [Standard]: 11.5 – 12.5 Ω

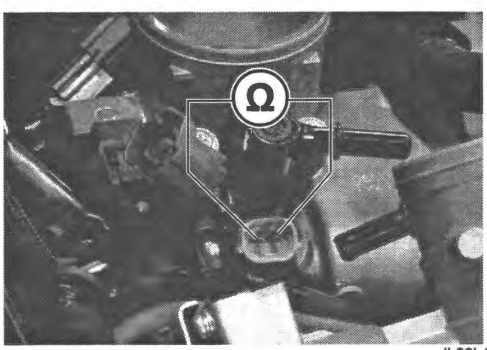

IL06L1170025-01

5) After finishing the fuel injector inspection, install the removed parts.

Fuel Injector Removal and Installation

BENL06L21706021

NOTE

The fuel injector can be removed without removing the throttle body.

Removal

1) Remove the air cleaner box. ☞(Page 1D-6)
2) Place a rag over the fuel feed hose and disconnect the fuel feed hose. ☞(Page 1G-5)
3) Disconnect the fuel injector couplers (1) from the fuel injectors.

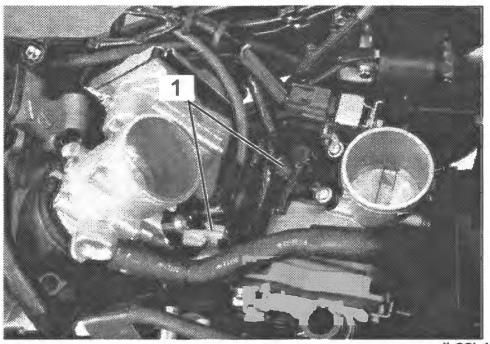

IL06L1170026-01

4) Remove the fuel injectors (1) from the throttle bodies.

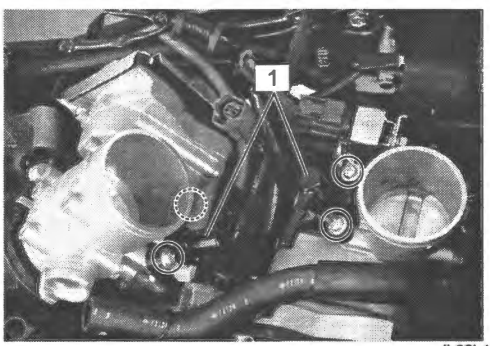

IL06L1170027-01

Installation

Install the fuel injector in the reverse order of removal. Pay attention to the following points:

- Install the fuel injector to the throttle body, and then tighten the fuel injector bolt to the specified torque.

  Tightening torque
  Fuel injector bolt (a): 3.5 N·m (0.36 kgf-m, 2.60 lbf-ft)

- Connect the fuel injector couplers to the fuel injector. Make sure that each coupler is installed in the correct position. The color on each lead wire refers to the appropriate fuel injector.

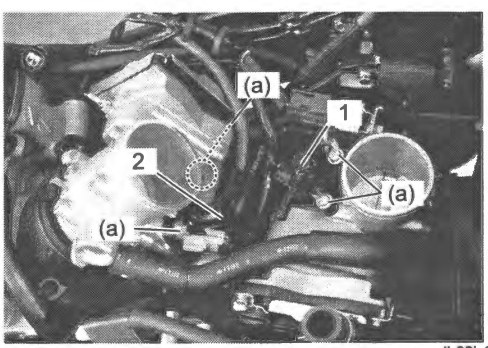

IL06L1170028-02

Coupler	Wire color
Front injector (1)	Sb and Gr/W
Rear injector (2)	Sb and Gr/B

Fuel Injector Inspection and Cleaning

BENL06L21706022

Refer to "Fuel Injector Removal and Installation" (Page 1G-16).

- Inspect the fuel filter for clogging with foreign particles. Blow the fuel filter with compressed air to clean the mesh, if clogged.

Specifications

Tightening Torque Specifications

BENL06L21707001

Fastening part	Tightening torque			Note
	N·m	kgf-m	lbf-ft	
Fuel tank filler cap bolt	3.0	0.31	2.25	☞(Page 1G-7)
Fuel tank front mounting bolt	10	1.0	7.5	☞(Page 1G-8)
Fuel tank rear mounting bolt	23	2.3	17.0	☞(Page 1G-8)
Fuel pump mounting bolt	10	1.0	7.5	☞(Page 1G-11)
Fuel injector bolt	3.5	0.36	2.60	☞(Page 1G-16)

Reference:
For the tightening torques of fasteners not specified in this page, refer to:
"Fuel Tank Components" (Page 1G-5)
"Fuel Pump Components" (Page 1G-9)
"Fasteners Information" in Section 0C (Page 0C-10)

Special Tools and Equipment

Recommended Service Material

BENL06L21708001

NOTE

Required service material(s) is also described in:
"Fuel Pump Components" (Page 1G-9)

Special Tool

BENL06L21708002

09915–74521 Oil pressure gauge hose ☞(Page 1G-4)		09915–77331 Oil pressure gauge (1000 kPa) ☞(Page 1G-4)	
09940–40211 Fuel pressure gauge adapter Discontinued ☞(Page 1G-4)	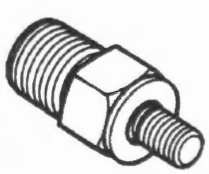	09940–40220 Fuel pressure gauge attachment ☞(Page 1G-4)	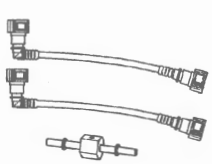

Ignition System

Schematic and Routing Diagram

Ignition System Diagram

BENL06L21802001

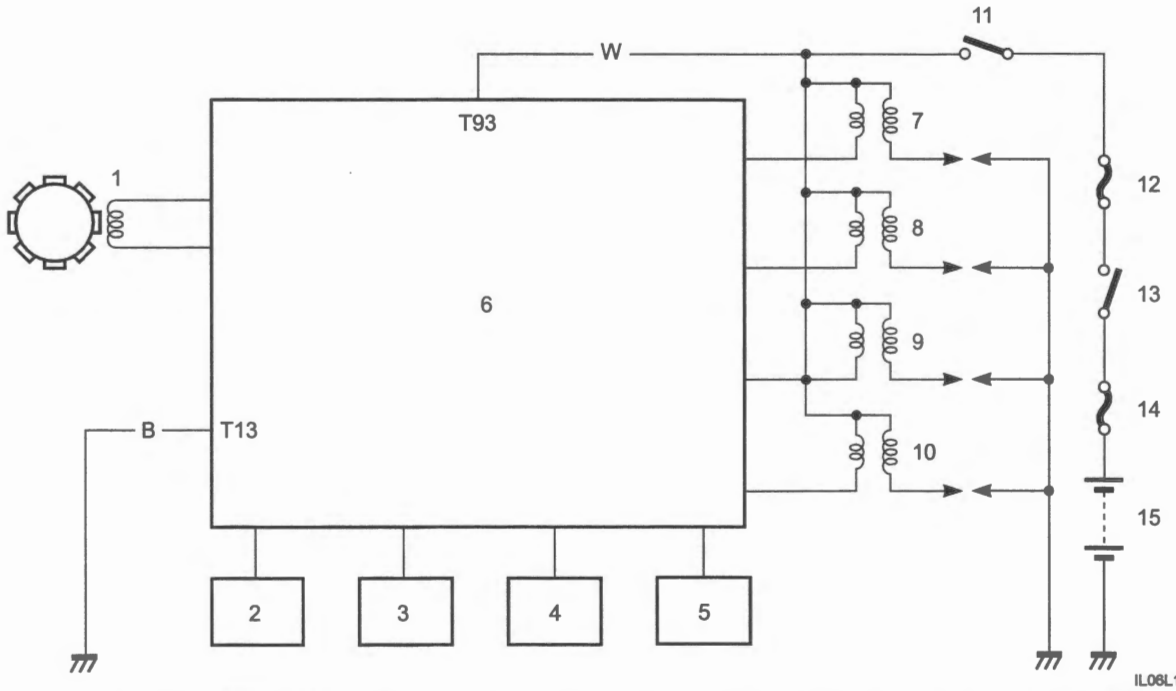

IL06L1180012-01

1. CKP sensor	6. ECM	11. Engine stop / starter switch
2. TP sensor	7. Ignition coil #1 (Center)	12. Ignition fuse
3. ECT sensor	8. Ignition coil #1 (Side)	13. Ignition switch
4. GP switch	9. Ignition coil #2 (Center)	14. Main fuse
5. Clutch lever position switch	10. Ignition coil #2 (Side)	15. Battery

Ignition System Components Location

BENL06L21802002

Refer to "Electrical Components Location": Service Manual Information in Section 0A (Page 0A-10).

Diagnostic Information and Procedures

Ignition System Symptom Diagnosis

BENL06L21804001

Condition	Possible cause	Correction / Reference Item
Spark plug not sparking	Damaged spark plugs.	*Replace. ☞(Page 0B-8)*
	Fouled spark plugs.	*Replace. ☞(Page 0B-8)*
	Wet spark plugs.	*Dry or replace. ☞(Page 0B-8)*
	Defective ignition coils or spark plug caps.	*Replace. ☞(Page 1H-6)*
	Defective CKP sensor.	*Replace. ☞(Page 1J-5) ☞(Page 1J-7)*
	Defective ECM.	*Replace. ☞(Page 1C-2)*
	Open-circuited wiring connections.	*Repair or replace. ☞(Page 9A-5)*
	Open or short in high-tension cords.	*Replace. ☞(Page 1H-6)*
Engine stalls easily (No spark)	Fouled spark plugs.	*Replace. ☞(Page 0B-8)*
	Defective CKP sensor.	*Replace. ☞(Page 1J-5) ☞(Page 1J-7)*
	Defective ECM.	*Replace. ☞(Page 1C-2)*
Spark plug is wet or quickly becomes fouled with carbon	Excessively rich air/fuel mixture.	*Inspect FI system.*
	Excessively idling speed.	*Inspect FI system.*
	Incorrect gasoline.	*Change.*
	Dirty air cleaner element.	*Replace. ☞(Page 0B-3)*
	Incorrect spark plugs (Cold type).	*Change to standard spark plug. ☞(Page 0B-8)*
Spark plug quickly becomes fouled with oil or carbon	Worn piston rings.	*Replace. ☞(Page 1D-58)*
	Worn pistons.	*Replace. ☞(Page 1D-58)*
	Worn cylinders.	*Replace. ☞(Page 1D-32) ☞(Page 1D-36)*
	Excessive valve-stem to valve-guide clearance.	*Replace. ☞(Page 1D-48)*
	Worn valve stem oil seals.	*Replace. ☞(Page 1D-48)*
Spark plug electrodes overheat or burn	Incorrect spark plugs (Hot type).	*Change to standard spark plug. ☞(Page 0B-8)*
	Overheated engine.	*Tune-up.*
	Loose spark plugs.	*Tighten. ☞(Page 0B-8)*
	Excessively lean air/fuel mixture.	*Inspect FI system.*

No Spark or Poor Spark

BENL06L21804002

Troubleshooting

NOTE

Check that the transmission is in neutral and the engine stop switch is in the "RUN" position. Grasp the clutch lever. Check that the fuse is not blown and the battery is fully-charged before diagnosing.

Step 1

1) Check the ignition system couplers for poor connections.

Is there connection in the ignition system couplers?

Yes Go to Step 2.

No Poor connection of couplers.

Step 2

1) Turn the ignition switch ON.
2) Measure the battery voltage between W wire (+) and B wire (–) of ECM. Refer to "Ignition System Diagram" (Page 1H-1).

Is the voltage OK?

Yes Go to Step 3.

No
- Faulty ignition switch.
- Faulty engine stop / starter switch.
- Broken wire harness or poor connection of related circuit couplers.

Step 3

Measure the ignition coil primary peak voltage. Refer to "Ignition Coil Inspection" (Page 1H-6).

Is the peak voltage OK?

Yes Go to Step 4.

No Go to Step 5.

Step 4

Inspect the spark plugs. ☞(Page 0B-8)

Is the spark plug(-s) OK?

Yes Go to Step 5.

No Faulty spark plug(-s).

Step 5

Inspect the ignition coil(-s). ☞(Page 1H-6)

Is the ignition coil(-s) OK?

Yes Go to Step 6.

No Faulty ignition coil(-s).

Step 6

Measure the CKP sensor peak voltage and its resistance. Refer to "DTC P0335 (C12)" in Section 1A (Page 1A-63).

Are the peak voltage and resistance OK?

Yes
- Faulty ECM.
- Open or short circuit in wire harness.
- Poor connection of ignition couplers.

No
- Faulty CKP sensor.
- Metal particles or foreign material being stuck on the CKP sensor and rotor tip.

Repair Instructions

Ignition Coil Construction

BENL06L21806001

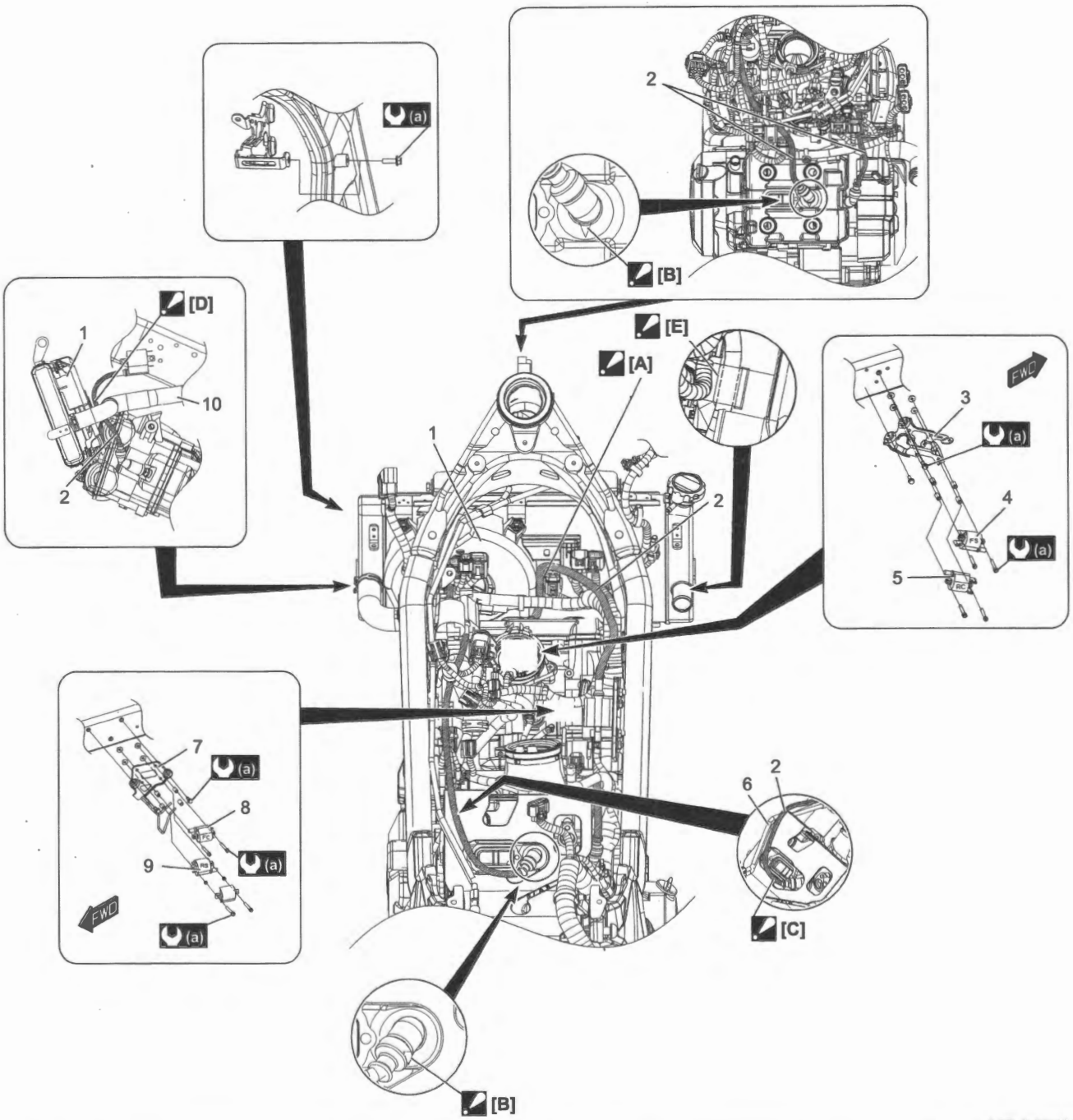

IL06L1180018-02

[A]: Pass the high-tension cord through guide of the radiator fan shroud.	2. High-tension cord	8. Ignition coil #1 (Center)
[B]: Face the " △ " mark to the exhaust side.	3. Ignition coil bracket No.2	9. Ignition coil #2 (Side)
[C]: Pass the high-tension cord to the inside of the front brake hose (master cylinder to ABS control unit/HU) and upper side of the rubber seat.	4. Ignition coil #1 (Side)	10. Radiator inlet hose
[D]: Pass the high-tension cord to the rearward of the radiator fan shroud and forward of the radiator inlet hose.	5. Ignition coil #2 (Center)	(a) : 10 N·m (1.0 kgf-m, 7.5 lbf-ft)
[E]: Position the high-tension cord to the forward of the guide end.	6. Front brake hose (master cylinder to ABS control unit/HU)	
1. Radiator fan shroud	7. Ignition coil bracket No.1	

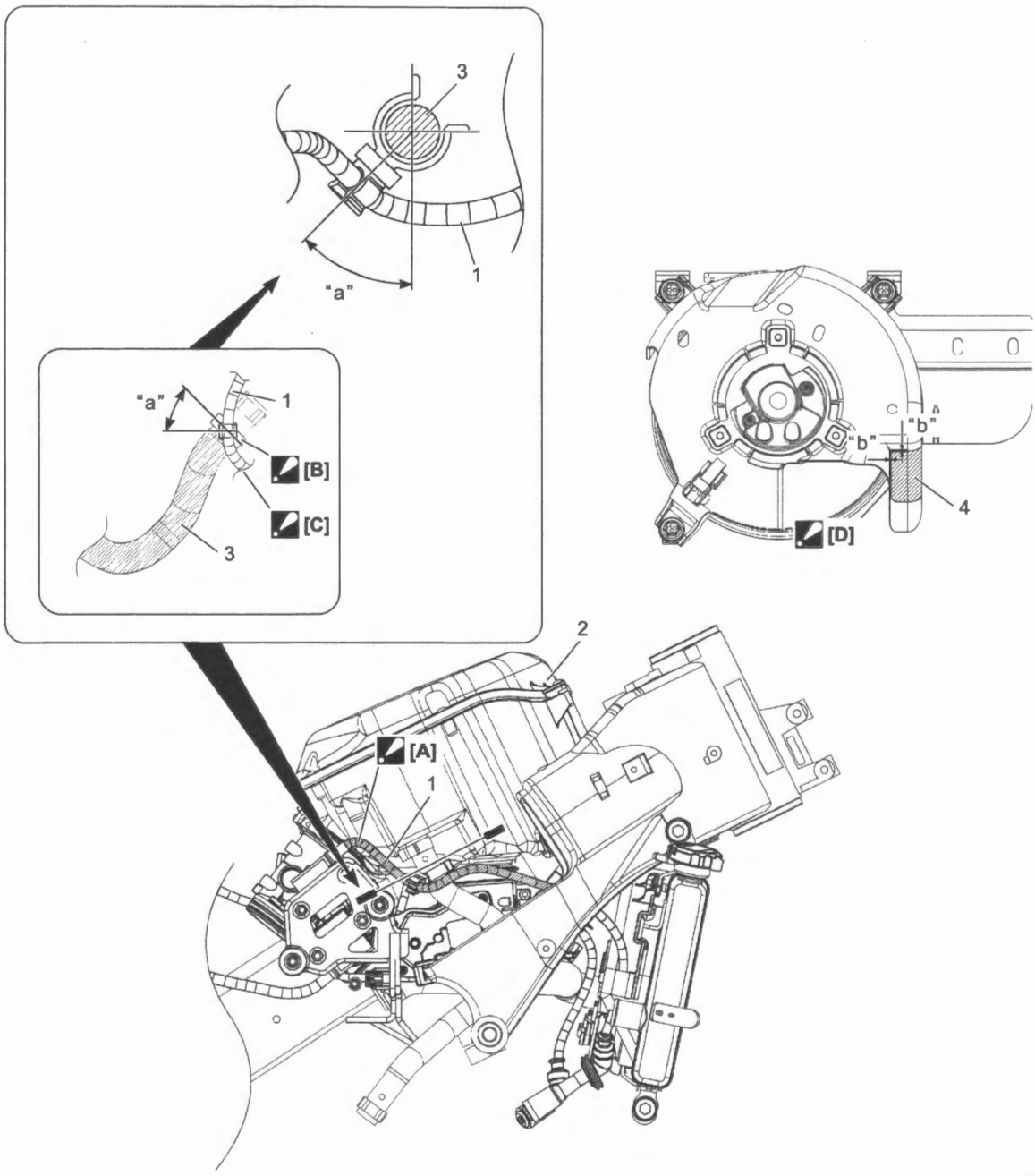

IL06L1180019-01

[A]: Pass the high-tension cord to the outside of the air cleaner box.	1. High-tension cord	"a": 45°
[B]: Clamp the high-tension cord between the clip and protect tube.	2. Air cleaner box	"b": 0 – 3 mm (0 – 0.11 in)
[C]: Clamp the high-tension cord to downward.	3. PCV hose	
[D]: Stick the protector aligning with the emboss line.	4. High-tension cord protector	

Spark Plug Removal and Installation

BENL06L21806002

For removal and installation procedure, refer to "Spark Plugs" in Section 0B (Page 0B-8). And if necessary, replace the spark plug with a new one.

Ignition Coil Removal and Installation

BENL06L21806003

Refer to "Ignition Coil Construction" (Page 1H-4).

Removal

1) Remove the throttle body. ☞(Page 1D-7)
2) Disconnect the all spark plug caps. ☞(Page 1H-6)
3) Disconnect the all ignition coil connectors from the cylinder head.
4) Mark the ignition coils to identify their respective cylinders.
5) Remove the ignition coil brackets.
6) Remove the ignition coils.

Installation

1) Install the ignition coil brackets and ignition coils.
2) Tighten the ignition coil bracket bolt to the specified torque.

Tightening torque
Ignition coil bracket bolt (a): 10 N·m (1.0 kgf-m, 7.5 lbf-ft)

3) Connect the ignition coil connectors (1).

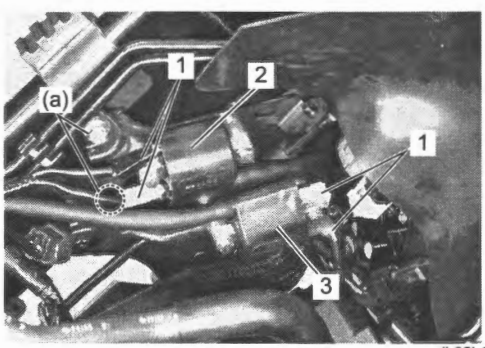

IL06L1180002-02

2.	Ignition coil #1 (Side)
3.	Ignition coil #2 (Center)

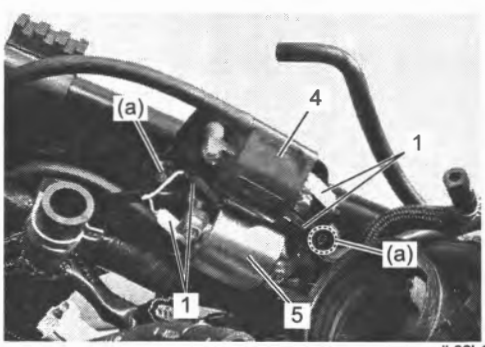

IL06L1180003-02

4.	Ignition coil #1 (Center)
5.	Ignition coil #2 (Side)

4) Pass the high-tension cords. Refer to "Ignition Coil Construction" (Page 1H-4).
5) Connect the spark plug caps. ☞(Page 1H-6)
6) Install the removed parts.

Ignition Coil Inspection

BENL06L21806004

Refer to "Air Cleaner Box Removal and Installation" in Section 1D (Page 1D-6).

Ignition Coil Primary Peak Voltage

1) Disconnect the all spark plug caps. ☞(Page 1H-6)
2) Connect the new spark plugs (1) to each spark plug cap (2) and ground them to the cylinder heads.
3) Disconnect the fuel injector coupler. ☞(Page 1G-16)

NOTE

Be sure that all the spark plugs are connected properly and the battery used is in fully-charged condition.

Front cylinder

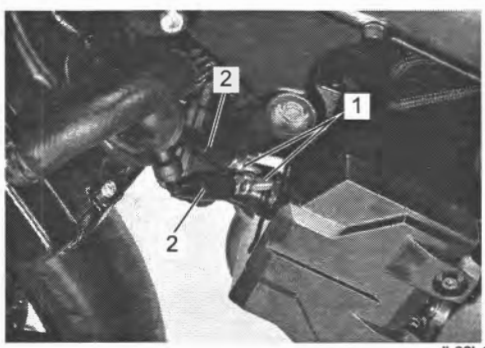

IL06L1180004-01

Rear cylinder

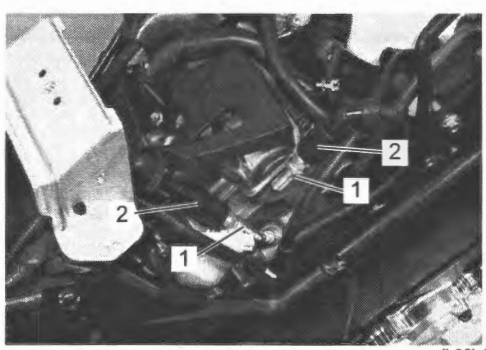

IL06L1180005-01

4) Connect the multi circuit tester with the peak voltage adapter (1) as follows:

NOTE

Do not disconnect the ignition coil terminals.

Ignition coil – circuit tester connection

	(+) Probe	(–) Probe
Ignition coil #1 (Center) (2)	W/Bl wire terminal	Ground
Ignition coil #1 (Side) (2)	Y wire terminal	Ground
Ignition coil #2 (Center) (2)	B/Bl wire terminal	Ground
Ignition coil #2 (Side) (2)	G wire terminal	Ground

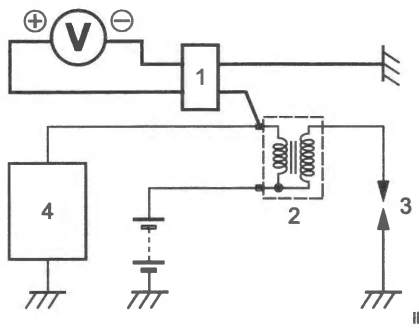

IE31J1180015-01

3. New spark plug	4. ECM

5) Measure the ignition coil primary peak voltage in the following procedures:

⚠ WARNING

Do not touch the tester probes and spark plugs to prevent an electric shock while testing.

a) Shift the transmission to the neutral and turn the ignition switch ON.
b) Grasp the clutch lever.
c) Press the starter button and allow the engine to crank for a few seconds, and then measure the ignition coil primary peak voltage.

6) Repeat the c) procedure several times and measure the highest peak voltage.
If the voltage is lower than standard range, replace the ignition coil. ☞(Page 1H-6)

Ignition coil primary peak voltage
150 V or more

7) After measuring the ignition coil primary peak voltage, install the removed parts.

Ignition Coil Resistance

1) Disconnect the spark plug caps. ☞(Page 1H-6)
2) Disconnect the ignition coil connectors (1).

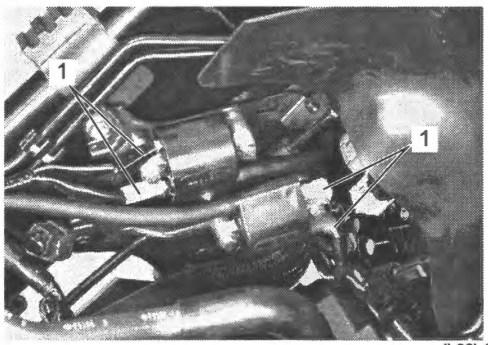

IL06L1180006-01

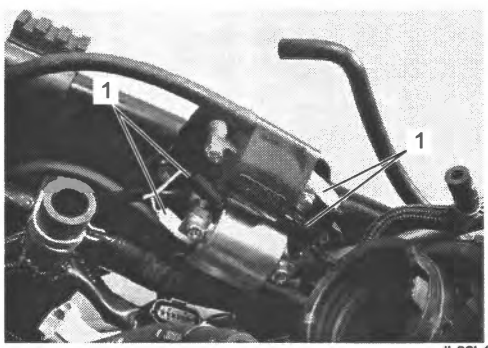

IL06L1180007-01

3) Measure the ignition coil for resistance in both primary and secondary coils. If the resistance is not within the standard range, replace the ignition coil with a new one.

Ignition coil resistance
Primary [Standard]: 3.0 – 4.2 Ω
Secondary [Standard]: 24000 Ω – 36000 Ω

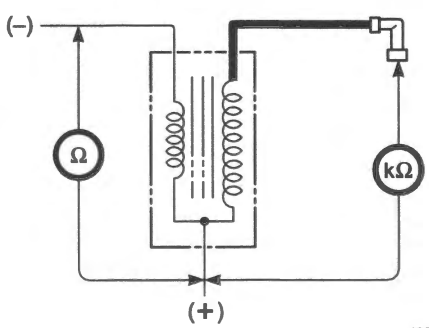

I933H1180014-03

4) After measuring the ignition coil resistance, install the removed parts.

Engine Stop / Starter Switch Inspection

BENL06L21806005

1) Turn the ignition switch OFF.
2) Remove the air cleaner box. ☞(Page 1D-6)
3) Disconnect the right handlebar switch lead wire coupler (1).

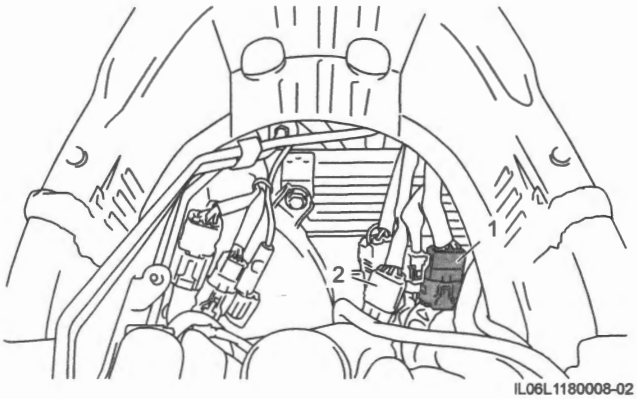

IL06L1180008-02

2. Immobilizer antenna coupler (if equipped)

4) Inspect the engine stop / starter switch for continuity with a tester.
If any abnormality is found, replace the right handlebar switch with a new one. ☞(Page 6B-6)

Position \ Terminal	T6	T5	T4	T10
OFF (⊗)				
RUN (○)	○	○		
START (○)	○	○	○	○

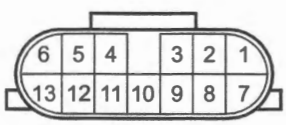

IL06L1180013-01

5) After finishing the engine stop/starter switch inspection, install the removed parts.

Ignition Switch Inspection

BENL06L21806006

1) Remove the air cleaner box. ☞(Page 1D-6)
2) Disconnect the ignition switch lead wire coupler (1).

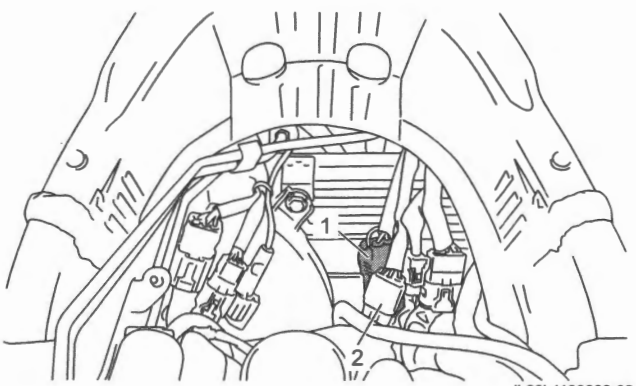

IL06L1180009-02

2. Immobilizer antenna coupler (if equipped)

3) Inspect the ignition switch for continuity with a circuit tester. If any abnormality is found, replace the ignition switch with a new one.

With immobilizer control system

Position \ Terminal	T1	T2	T3	T5
ON	○	○	○	○
OFF				
LOCK				
P	○			○

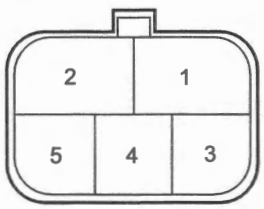

IL06L1180010-02

Without immobilizer control system (Except for E.U.)

Position \ Color	T4	T1	T2	T3	T5
ON	○	○	○	○	○
OFF					
LOCK					
P		○			○

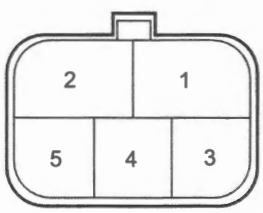

IL06L1180020-02

Without immobilizer control system (For E.U.)

Position \ Color	T1	T5	T2	T6	T3
ON	○	○	○	○	○
OFF					
LOCK					
P		○			○

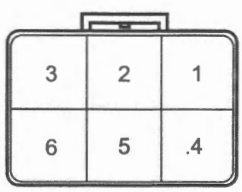

IL06L1180011-02

4) After finishing the ignition switch inspection, reinstall the removed parts.

Ignition Switch Removal and Installation

BENL06L21806007

NOTE

When ignition switch is replace with new one, perform ignition key registration. (with immobilizer control system) ☞(Page 10C-7)

Removal

For break head bolt

1) Remove the steering stem upper bracket. ☞(Page 6B-9)
2) Remove the ignition switch mounting bolts (1).
3) Remove the ignition switch (2).

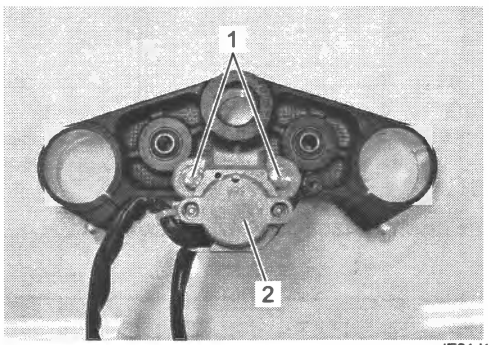

IE31J1180019-01

Except for break head bolt

1) Remove the air cleaner box. ☞(Page 1D-6)
2) Remove the ignition switch coupler from the radiator fan cover.
3) Disconnect the ignition switch coupler (1).

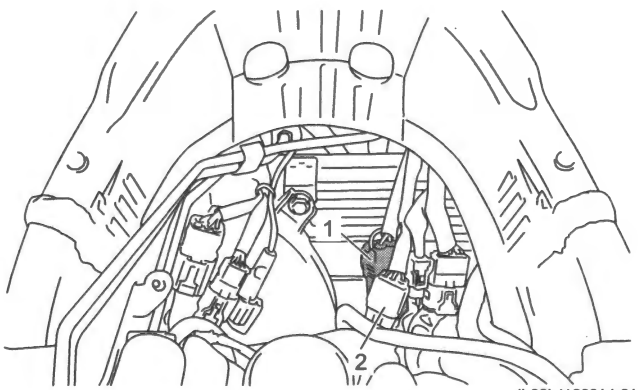

IL06L1180014-01

2. Immobilizer antenna coupler (if equipped)

4) Remove the clamps (1).

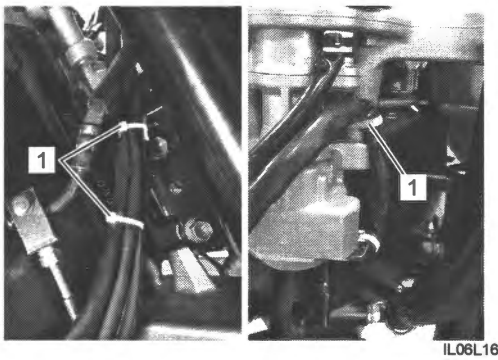

IL06L1620030-01

5) Remove the ignition switch (1) with the special tools.

Special tool
09930–11920
09930–11940

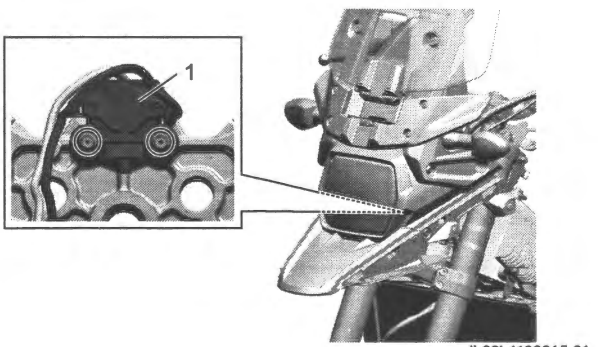

IL06L1180015-01

6) Remove the following parts.
   - Ignition switch cover (1) (without immobilizer control system)
   - Immobilizer antenna (1) (with immobilizer control system) ☞(Page 10C-7)

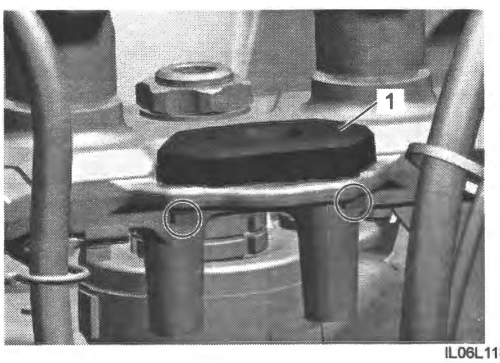

IL06L1180016-01

Installation
Install the ignition switch in the reverse order of removal. Pay attention to the following points:

For break head bolt

- Tighten new ignition switch mounting bolts (1) with the special tool until head of each bolt is broken off.

Special tool
09930–11940
09940–63110

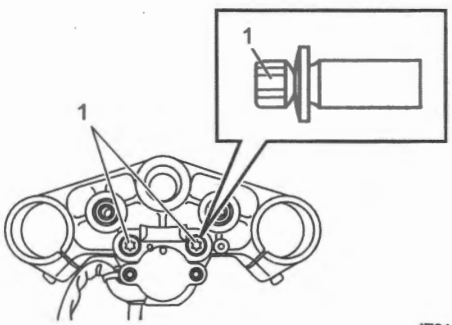

IE31J1180024-02

Except for break head bolt

- Replace the ignition switch bolts new one, and then tighten the ignition switch mounting bolts (1) to the specified torque with the special tools.

Special tool
09930–11920
09930–11940

Tightening torque
Ignition switch mounting bolt (a): 23 N·m (2.3 kgf-m, 17.0 lbf-ft)

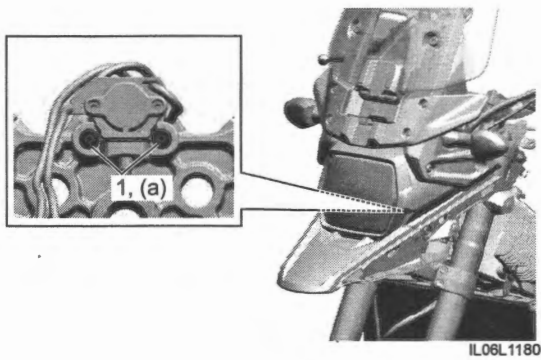

IL06L1180017-01

Specifications

Tightening Torque Specifications

BENL06L21807001

Fastening part	Tightening torque			Note
	N·m	kgf-m	lbf-ft	
Ignition coil bracket bolt	10	1.0	7.5	☞(Page 1H-6)
Ignition switch mounting bolt	23	2.3	17.0	☞(Page 1H-10)

Reference:
For the tightening torques of fasteners not specified in this page, refer to:
"Ignition Coil Construction" (Page 1H-4)
"Fasteners Information" in Section 0C (Page 0C-10)

Special Tools and Equipment

Special Tool

BENL06L21808001

09930–11920 Torx® bit (JT40H) Torx® is the registered trademark of Camcar Division of Textron inc. U.S.A. ☞(Page 1H-9) / ☞(Page 1H-10) 	09930–11940 Torx® bit holder (3/8 sq.) Torx® is the registered trademark of Camcar Division of Textron inc. U.S.A. ☞(Page 1H-9) / ☞(Page 1H-10) / ☞(Page 1H-10) 
09940–63110 Torx® bit (E8) Torx® is the registered trademark of Camcar Division of Textron inc. U.S.A. ☞(Page 1H-10) 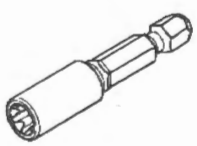	

Starting System

Schematic and Routing Diagram

Starting System Diagram

BENL06L21902001

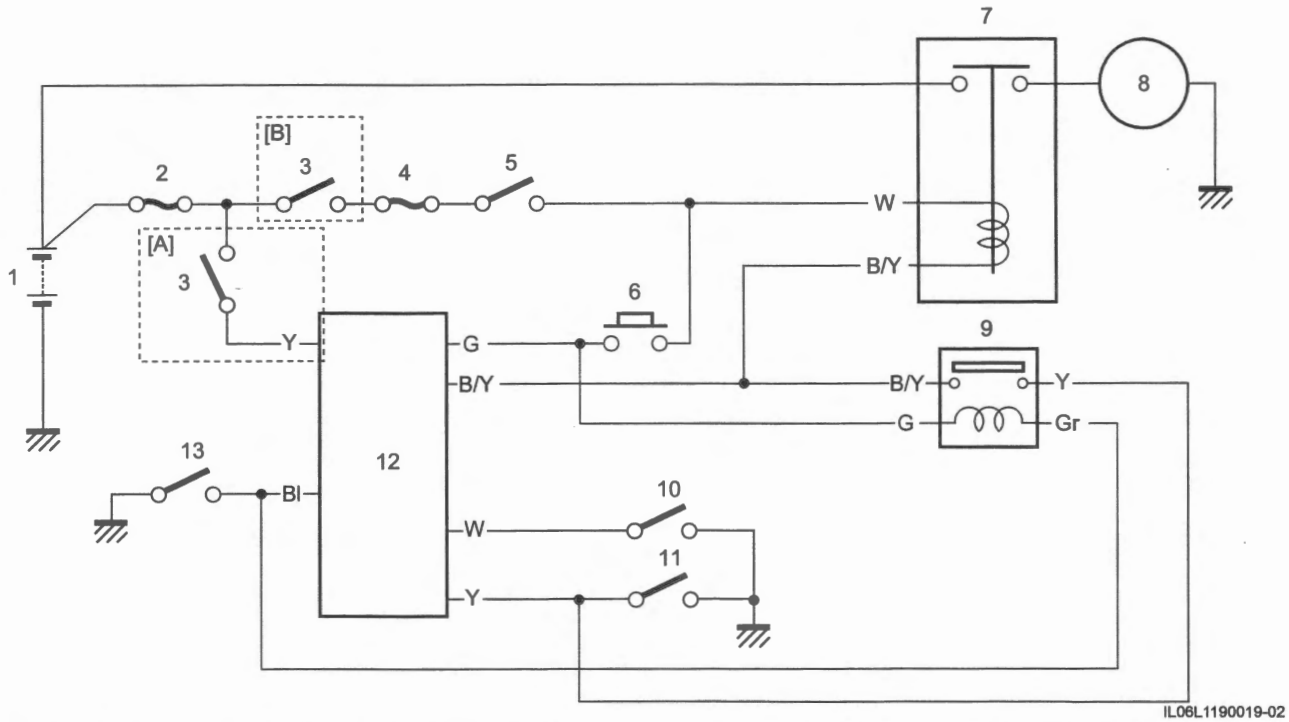

IL06L1190019-02

[A]: Without immobilizer control system	4. Ignition fuse (10 A)	9. Starter sub relay
[B]: With immobilizer control system	5. Engine stop / starter switch ("RUN / STOP" position)	10. Side-stand switch
1. Battery	6. Engine stop / starter switch ("START" position)	11. Clutch lever position switch
2. Main fuse (30 A)	7. Starter relay	12. ECM
3. Ignition switch	8. Starter motor	13. GP switch

Component Location

Starting System Components Location

BENL06L21903001

Refer to "Electrical Components Location": Service Manual Information in Section 0A (Page 0A-10).

Diagnostic Information and Procedures

Starting System Symptom Diagnosis

BENL06L21904001

Condition	Possible cause	Correction / Reference Item
Engine does not turn though the starter motor runs	Faulty starter clutch.	*Replace. ☞(Page 1I-9)*
Starter button is not effective	Run down battery.	*Repair or replace. ☞(Page 1J-9)*
	Defective switch contacts.	*Replace* • *Ignition switch: ☞(Page 1H-9)* • *Right handlebar switch: ☞(Page 6B-3)* • *Side-stand switch: ☞(Page 1D-22)* • *Clutch lever position switch: ☞(Page 5C-8)* • *GP switch: ☞(Page 5B-12)*
	Brushes not seating properly on starter motor commutator.	*Repair or replace. ☞(Page 1I-6)*
	Defective relay(s).	*Replace.* • *Starter relay: ☞(Page 1I-7)* • *Starter sub relay: ☞(Page 1I-8)*
	Defective fuse(s).	*Replace.*

Starter Motor Will Not Run

BENL06L21904002

NOTE

Check the fuses and charge the battery fully before diagnosing.

Troubleshooting

Step 1

1) Shift the transmission into neutral.
2) Turn on the ignition switch listen for a click from the starter relay when the starter switch is pushed.

Is a click sound heard?

Yes Go to Step 2.

No Go to Step 3.

Step 2

Check if the starter motor runs when its terminal is connected to the battery (+) terminal.

NOTICE

Do not use thin "wire" because a large amount of current flows.

Does the starter motor run?

Yes
- Faulty starter relay.
- Loose or disconnected starter motor lead wire.
- Loose or disconnected between starter relay and battery (+) terminal.

No Faulty starter motor.

Step 3

Grasp the clutch lever and push the starter switch.

Does the starter motor run?

Yes
- Faulty ECM.
- Faulty GP switch.
- Poor contact of connector.
- Open circuit in wire harness.

No Go to Step 4.

Step 4

Measure the voltage between W wire (+) and B/Y wire (–) at the starter relay coupler when the starter switch is pushed. Refer to "Starting System Diagram" (Page 1I-1).

NOTE

- **A voltage drop lowers the voltage.**
- **The amount of the voltage drop depends on the model, equipments and the battery condition.**

Is the battery voltage applied?

Yes — Go to Step 4.

No
- Faulty ignition switch.
- Faulty engine stop / starter switch
- Faulty clutch lever position switch.
- Faulty ECM.
- Faulty GP switch.
- Faulty starter sub relay.
- Faulty side-stand switch.
- Poor contact of coupler.
- Open circuit in wire harness.

Step 5

Check the starter relay. ☞(Page 1I-7)

Is the starter relay OK?

Yes — Poor contact of the starter relay.

No — Faulty starter relay.

Starter Motor Runs But Does Not Crank the Engine

BENL06L21904003

NOTE

The starter motor does not run when the side-stand set on the ground.

Step 1

Check the side-stand switch. ☞(Page 1I-8)

Is the side-stand switch and starter idle gear OK?

Yes — Go to Step 2.

No — Faulty side-stand switch or starter idle gear.

Step 2

Check the starter clutch and starter idle gear. ☞(Page 1I-13)

Is the starter clutch and starter idle gear OK?

Yes
- Open circuit in wire harness.
- Poor contact of connector.

No — Faulty starter clutch or starter idle gear.

Repair Instructions

Starter Motor Components

BENL06L21906001

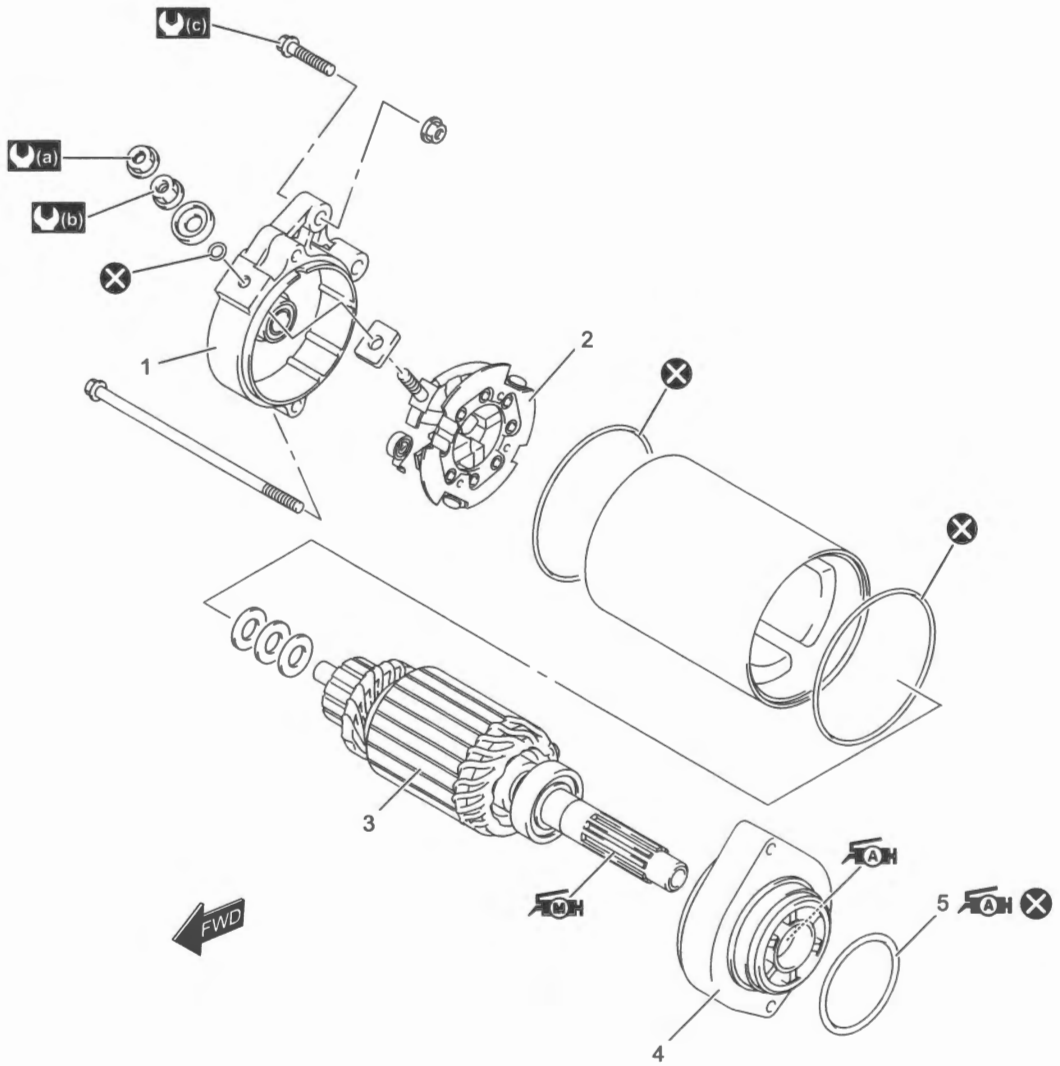

IE31J1190051-02

1. Frame	4. Housing	(b) : 5 N·m (0.51 kgf-m, 3.70 lbf-ft)	MH : Apply moly past to sliding surface.
2. Brush holder	5. O-ring	(c) : 10 N·m (1.0 kgf-m, 7.5 lbf-ft)	⊗ : Do not reuse.
3. Armature	(a) : 6 N·m (0.61 kgf-m, 4.45 lbf-ft)	AH : Apply grease.	

Starter Motor Assembly Removal and Installation

BENL06L21906002

Removal

1) Remove the oil cooler. ☞(Page 1E-5)
2) Turn the ignition switch OFF and disconnect the battery (–) lead wire. ☞(Page 1J-10)
3) Disconnect the starter motor read wire (1) and remove the starter motor mounting bolts (2).
4) Remove the starter motor (3).

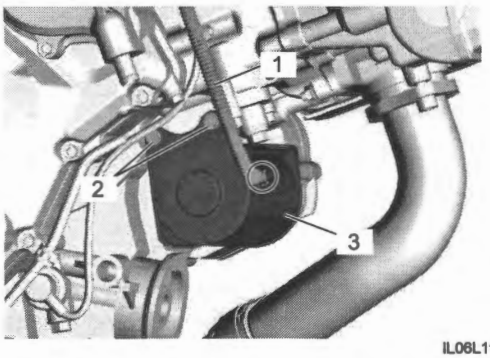

IL06L1190001-02

Installation

Install the starter motor in the reverse order of removal. Pay attention to the following points:

- Apply grease to the new O-ring.

  "A": Grease 99000–25011 (SUZUKI SUPER GREASE A)

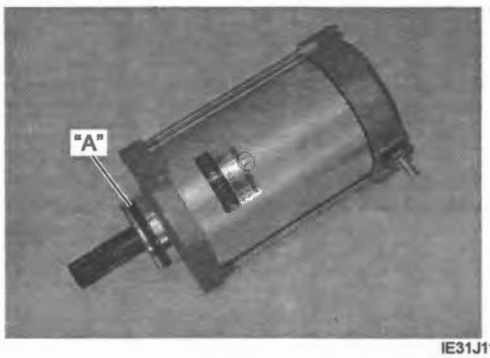

IE31J1190004-01

- Tighten the starter motor mounting bolts (1) to the specified torque.
- Fit the starter motor lead wire (2) in the specified position and tighten the starter motor lead wire mounting nut (3) to the specified torque. ☞(Page 9A-23)

  Tightening torque
  Starter motor mounting bolt (a): 10 N·m (1.0 kgf-m, 7.5 lbf-ft)
  Starter motor lead wire mounting nut (b): 6 N·m (0.61 kgf-m, 4.45 lbf-ft)

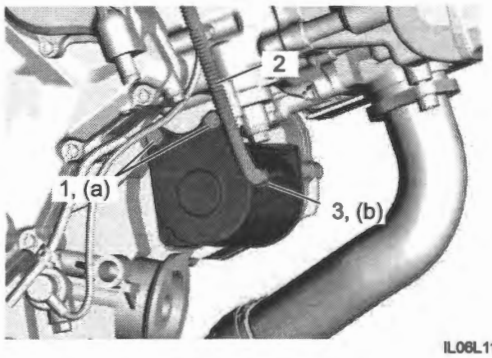

IL06L1190002-01

Starter Motor Disassembly and Reassembly

BENL06L21906003

Disassembly

Disassemble the starter motor. ☞(Page 1I-4)

Reassembly

Reassemble the starter motor in the reverse order of removal. Pay attention to the following points:

- Replace the O-rings with new ones.
- Apply grease to the lip of the oil seal.

  "A": Grease 99000–25011 (SUZUKI SUPER GREASE A)

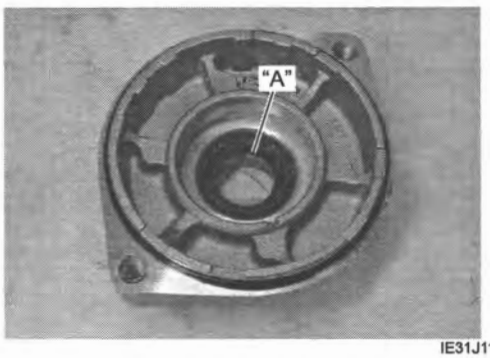

IE31J1190006-01

- Apply a small quantity of moly paste to the armature shaft.

  "A": Assembly lubrication 99000–25140 (SUZUKI MOLY PASTE)

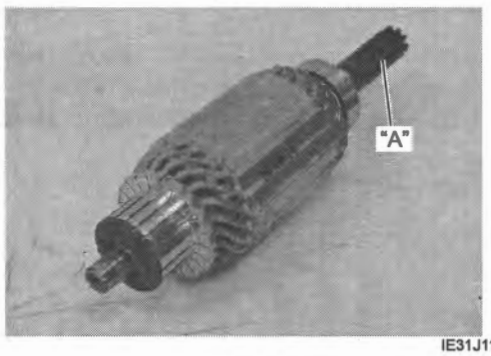

IE31J1190007-01

- Align the groove (1) on the brush holder with the projection (2) on the starter motor case.

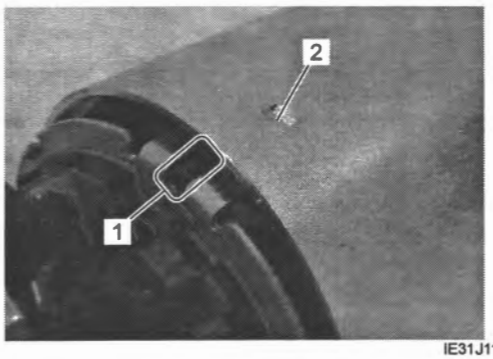

IE31J1190008-01

Starter Motor Inspection

BENL06L21906004

Refer to "Starter Motor Disassembly and Reassembly" (Page 1I-5).

Carbon Brush

Inspect the carbon brushes for abnormal wear, cracks or smoothness in the brush holder.
If any damages are found, replace the brush holder or brush terminal set with a new one.
Make sure that the length "a" is not less than the service limit. If this length becomes less than the service limit, replace the brush with a new one.

Stater motor brush length
[Limit]: 6.5 mm (0.26 in)

Special tool
09900–20102

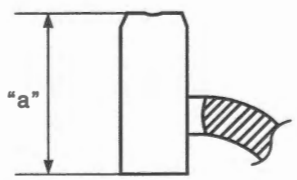

I718H1190013-01

Commutator

Inspect the commutator for discoloration, abnormal wear or undercut "a".
If the commutator is abnormally worn, replace the armature.
If the commutator surface is discolored, polish it with #400 sandpaper and wipe it using a clean, dry cloth.
If there is no undercut, scrape out the insulator (1) with a saw blade.

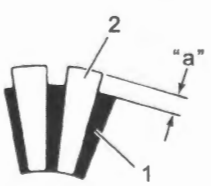

IE31J1190009-01

2. Segment

Armature Coil

Measure for continuity between each segment. Measure for continuity between each segment and the armature shaft.
If there is no continuity between the segments or there is continuity between the segments and shaft, replace the armature with a new one.

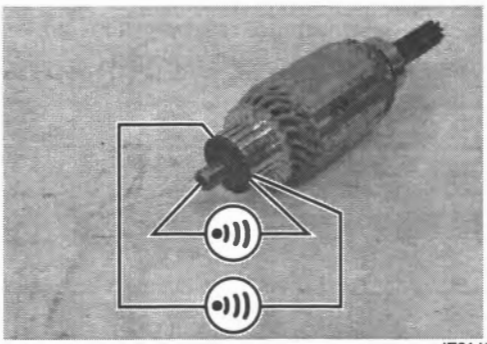

IE31J1190010-01

Bearing

Inspect the armature shaft bearing (1) for abnormal noise and smooth rotation. If there is anything unusual, replace the new armature assembly.

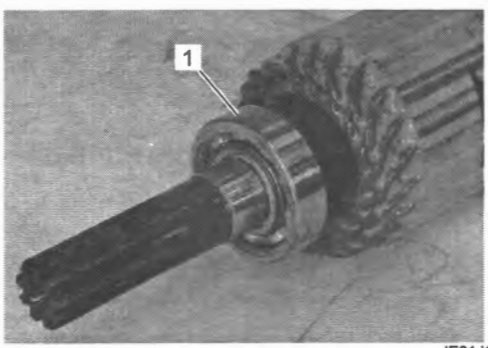

IE31J1190011-01

Oil Seal

Check the seal lip (1) for damage.
If any damage is found, replace the new housing end (Inside).

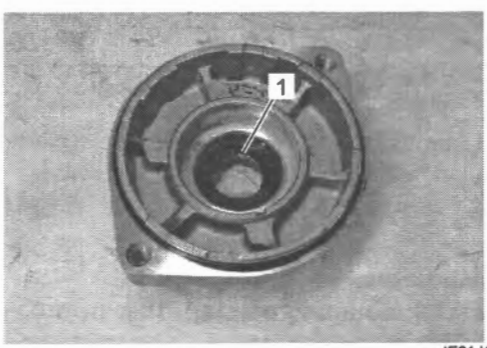

IE31J1190012-01

Starter Relay Removal and Installation

BENL06L21906005

Removal

1) Remove the seat. ☞(Page 9D-27)
2) Disconnect the battery (–) lead wire from the battery. ☞(Page 1J-10)
3) Disconnect the starter relay coupler (1) and remove the starter relay cover (2).

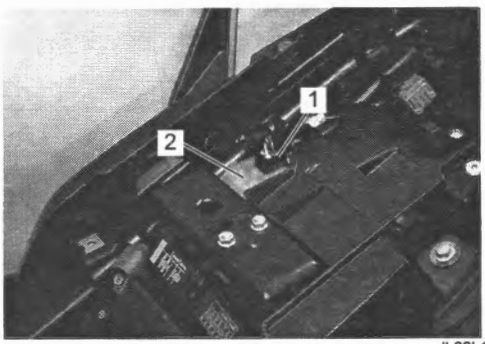

IL06L1190003-01

4) Disconnect the starter motor lead wire (1) and battery (+) lead wire (2).
5) Remove the starter relay (3).

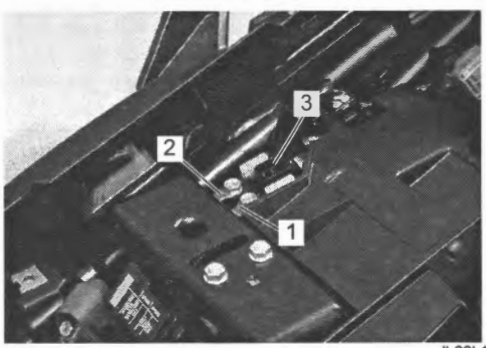

IL06L1190004-01

Installation

Install the starter relay in the reverse order of removal. Tighten the starter relay terminal bolts (1) to the specified torque.

Tighten torque

Starter relay terminal bolt (a): 4.4 N·m (0.45 kgf-m, 3.25 lbf-ft)

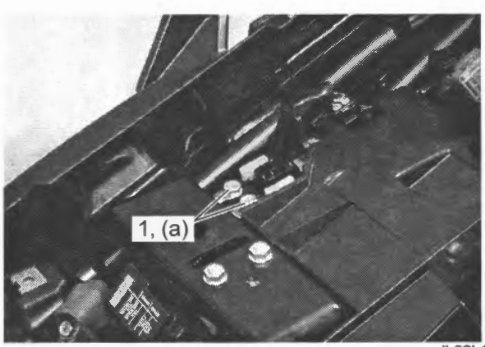

IL06L1190021-01

Starter Relay Inspection

BENL06L21906006

Refer to "Starter Relay Removal and Installation" (Page 1I-7).

1) Apply 12 V to (1) and (2) terminals and check for continuity between the positive and negative terminals using the multi circuit tester. If the starter relay clicks and continuity is found, the relay is OK.

NOTICE

Do not apply battery voltage to the starter relay for five seconds or more, otherwise the relay coil may overheat and get damaged.

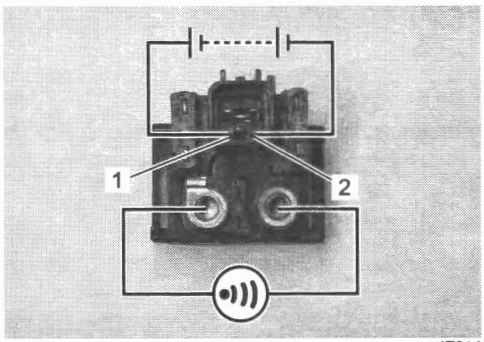

IE31J1190015-01

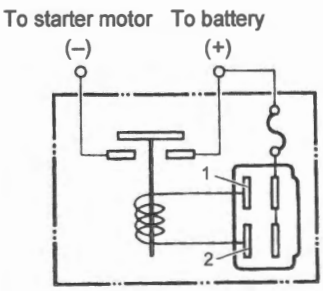

IE31J1190016-02

2) Measure the relay coil resistance between the terminals using the circuit tester. If the resistance is not within the specified value, replace the starter relay with a new one.

Starter relay resistance

[Standard]: 3 – 6 Ω

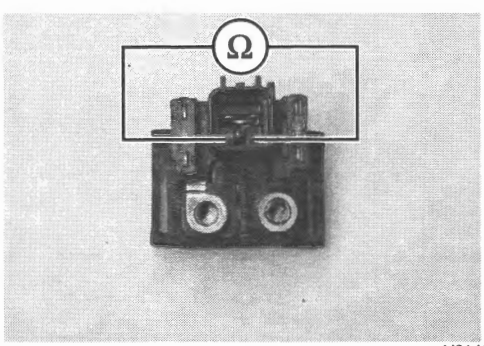

IJ31J1190005-01

Starter Sub Relay Inspection

BENL06L21906007

Refer to "Starter Sub Relay Removal and Installation" (Page 1I-8).

Check the starter sub relay in the following procedures. If abnormality is found, replace the relay box (1) with a new one.

1) Check that there is no continuity between terminals "T16" and "T22".
2) Check that there is continuity between terminals "T3" and "T9".
3) Connect battery positive (+) terminal and negative (–) terminal between terminals "T3" and "T9" and check for continuity between terminals "T16" and "T22".

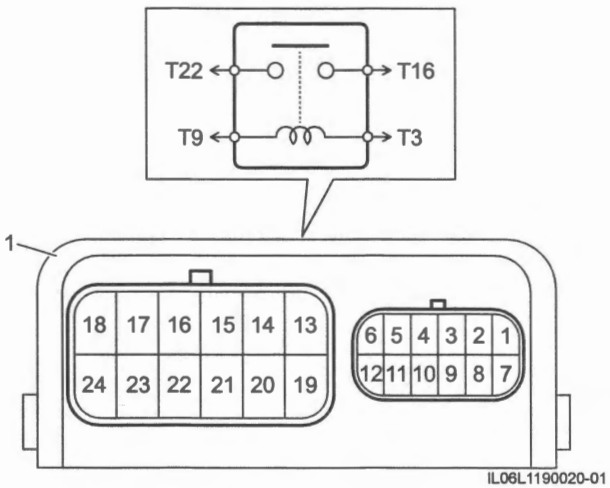

IL06L1190020-01

Starter Sub Relay Removal and Installation

BENL06L21906008

Refer to "Relay Box Removal and Installation" in Section 9A (Page 9A-42).

Starter Interlock System Parts Inspection

BENL06L21906009

Check the interlock system for proper operation. If the interlock system does not operate properly, check each component for damage or abnormalities. If any abnormality is found, replace the component with a new one.

Side-stand Switch

1) Turn the ignition switch OFF.
2) Lift and support the fuel tank. ☞(Page 1G-7)
3) Disconnect the side-stand switch coupler (1).

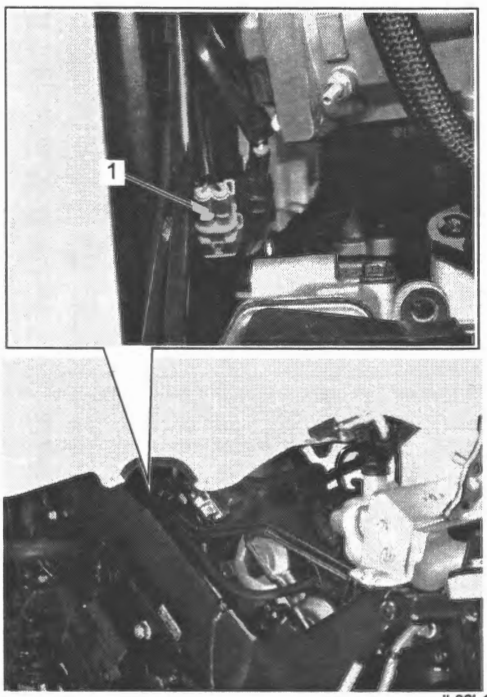

IL06L1190005-02

4) Set the "Diode test" of the multi circuit tester. Refer to "Precautions for Circuit Tester" in Section 00 (Page 00-8).
5) Check that the tester reads 1.4 V or more.

NOTE

If the tester reads less than 1.4 V when the tester probes are not connected, replace its battery.

6) Measure the voltage between G ((+) probe) and B/W ((–) probe) lead wires of the side-stand switch (1).

Side-stand switch voltage
ON (Side-stand retracted) [Standard]: 0.4 – 0.6 V
OFF (Side-stand on the ground) [Standard]: 1.4 V or more (Tester's battery voltage)

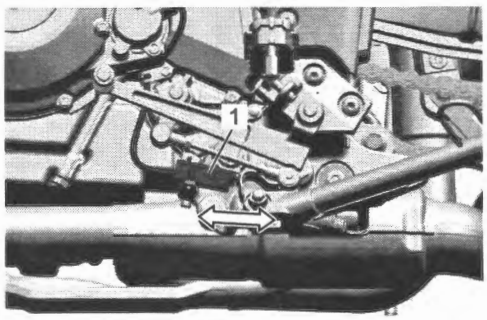

IL06L1190006-02

Gear Position Switch
Refer to "Gear Position Switch" under "GP Switch Inspection" in Section 5B (Page 5B-11).

Starter Torque Limiter / Starter Clutch Removal and Installation

BENL06L21906010

Removal

1) Remove the accessory bar. (If equipped): ☞(Page 9E-7)
2) Drain the engine oil. ☞(Page 1E-4)
3) Remove the clutch release cylinder (1). ☞(Page 5C-11)

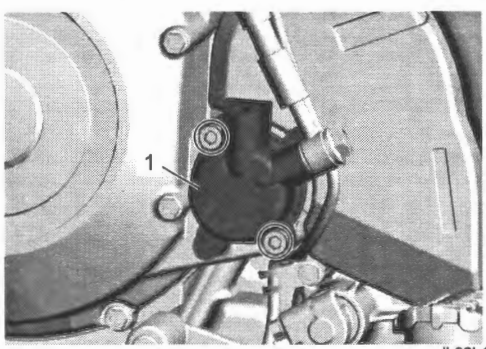

IL06L1190008-02

4) Lift and support the fuel tank. ☞(Page 1G-7)
5) Disconnect the CKP sensor coupler (1) and generator coupler (2).

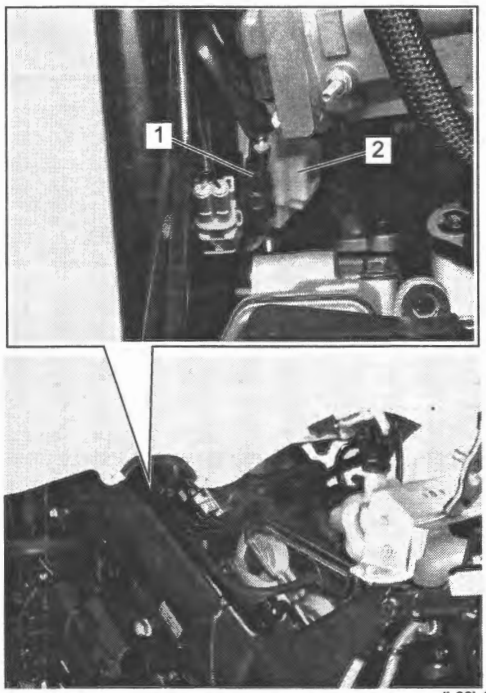

IL06L1190009-02

6) Remove the EVAP canister No.2 bracket (1) and the generator cover (2) from the crankcase.

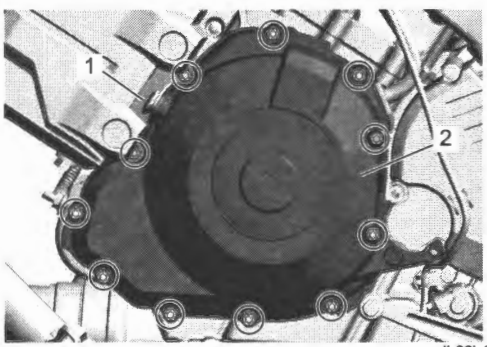

IL06L1190010-02

7) Removing the gasket (1) and dowel pin (2) from the crankcase.

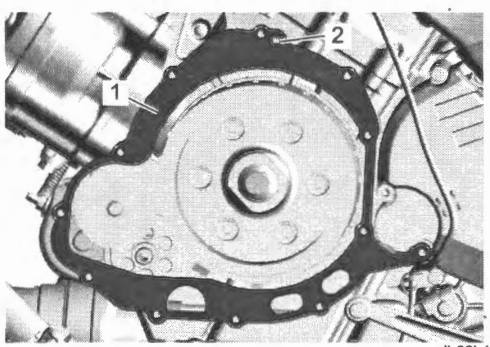

IL06L1190012-02

8) Remove the starter torque limiter (1), starter idle gear (2), spacer (3), shaft (4) and washers (5) from the crankcase.

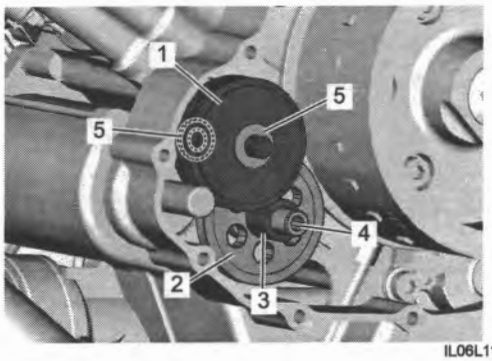

IL06L1190011-02

9) Remove the bushings (1) from the crankcase and generator cover.

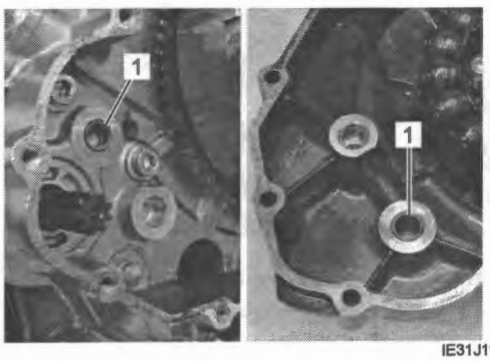

IE31J1190030-02

10) Remove the generator rotor (1). ☞(Page 1J-5)

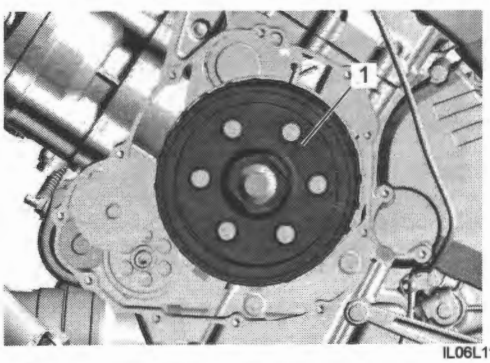

IL06L1190013-02

11) Remove the key (1) and starter driven gear (2) from the crankshaft.

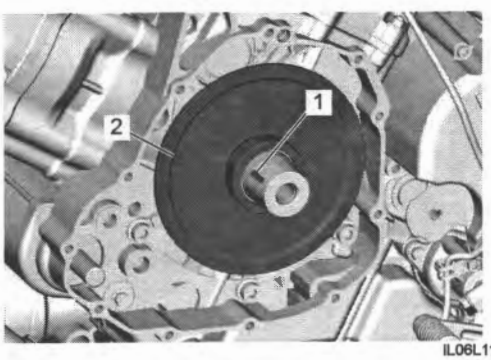

IL06L1190014-02

12) Hold the generator rotor with the special tool and remove the starter clutch bolts (1).

Special tool
(A): 09930–44541

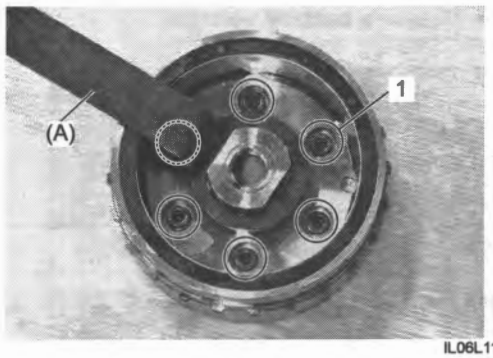

IL06L1190015-01

13) Remove the one way clutch (1) from the guide (2).

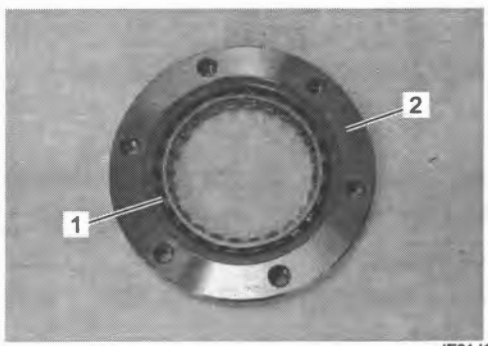

IE31J1190034-01

Installation

Install the starter clutch and starter torque limiter in the reverse order of removal. Pay attention to the following points:

- Apply engine oil to the one way clutch (1).
- When inserting the one way clutch (1) into the guide (2), fit the flange (3) in the step of the guide (2).

NOTE

Be sure to seat the flange (3) of the one way clutch (1) to the guide (2).

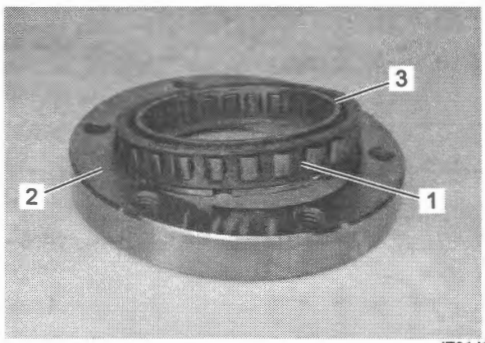

IE31J1190035-01

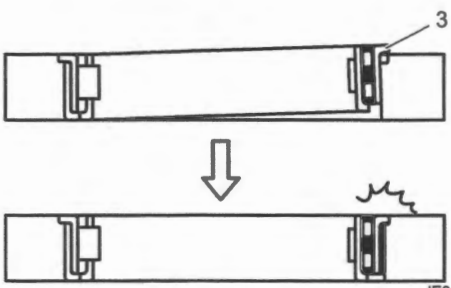

IE31J1190036-02

- Install the guide (1) to the generator rotor with the arrow mark (2) faced upward.

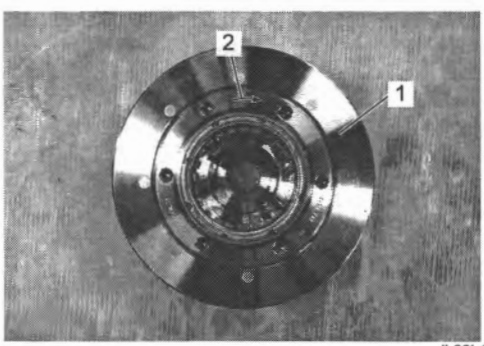

IL06L1190016-01

- Apply thread lock to the bolts (1), and then tighten them to the specified torque with the special tool.

"A": Thread lock cement 99000–32030 (THREAD LOCK CEMENT 1303B)

Special tool
(A): 09930–44530

Tightening torque
Starter clutch bolt (a): 25 N·m (2.5 kgf-m, 18.5 lbf-ft)

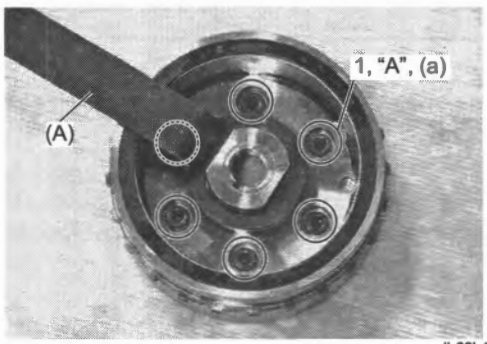

IL06L1190017-01

- Apply engine oil to the bushing (1) of the starter driven gear.



IE31J1190039-01

- Fit the key (1) in the key slot on the crankshaft.

NOTE

Align the crankshaft surface (2) and the edge (3) of key (1).

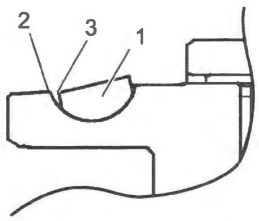

IE31J1190050-01

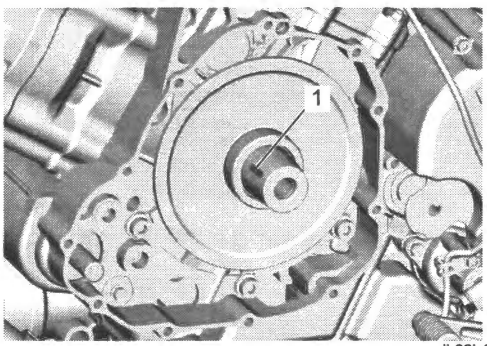

IL06L1190018-02

- Apply molybdenum oil solution to the starter idle gear shaft holes, and inside of bushings.

"A": Assembly lubrication (Molybdenum oil solution)

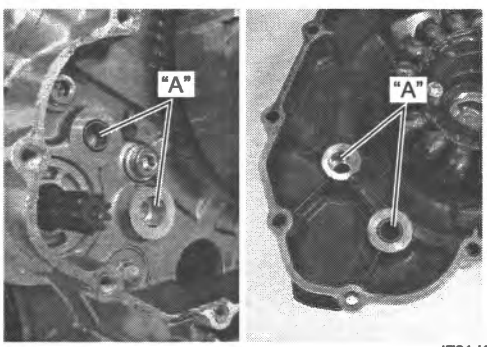

IE31J1190041-02

- Fit the washers (1) onto the starter torque limiter.

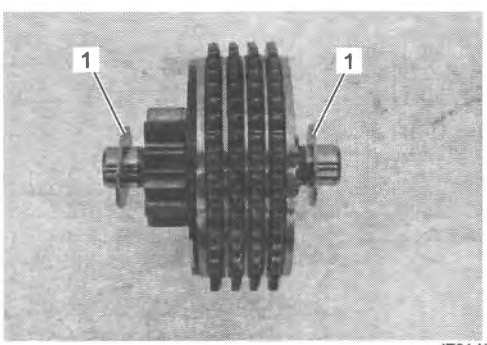

IE31J1190042-01

- Install the generator rotor onto crankshaft. ☞(Page 1J-7)

Starter Torque Limiter Inspection

BENL06L21906011

NOTICE

- **Do not attempt to disassemble the starter torque limiter.**
- **The starter torque limiter is available only as an assembly part.**

1) Hold the starter torque limiter with the special tools and vise.

Special tool
(A): 09930–73110
(B): 09930–73120

2) Turn the starter torque limiter with a torque wrench and check the slip torque. If the slip torque is not within the specification, replace the starter torque limiter with a new one.

Starter torque limiter slip torque
[Standard]: 20 – 45 N·m (2.0 – 4.5 kgf-m, 14.5 – 32.5 lbf-ft)

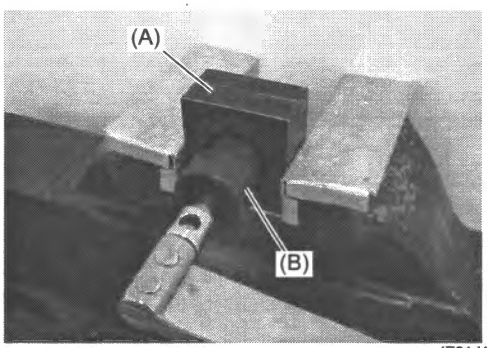

IE31J1190043-01

Starter Clutch Inspection

BENL06L21906012

Starter Clutch

1) Install the starter driven gear onto the starter clutch.
2) Turn the starter driven gear by hand to inspect the starter clutch for a smooth movement. The gear turns in one direction only. If a large resistance is felt for rotation, inspect the starter clutch or the starter clutch contacting surface on the starter driven gear for wear or damage.
   If they are found to be damaged, replace them with new ones.

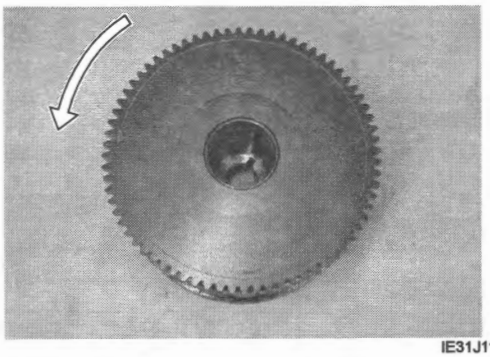

IE31J1190044-01

Starter Driven Gear Bushing

Inspect the starter driven gear bushing (1) for wear or damage. If any defects are found, replace the starter driven gear with a new one.

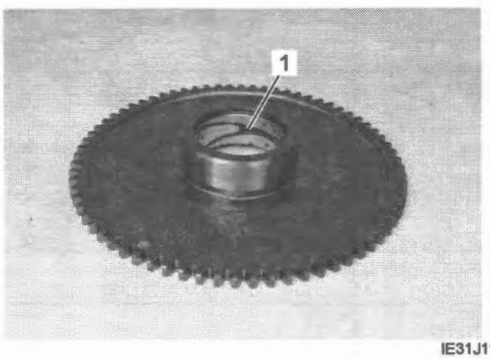

IE31J1190045-01

Starter Idle Gear

Inspect the starter idle gear for wear or damage. If any defects are found, replace it with a new one.

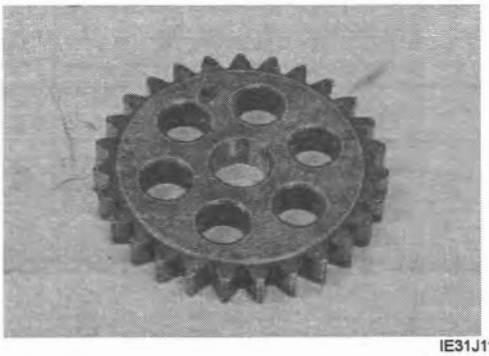

IE31J1190046-01

Engine Stop / Starter Switch Inspection

BENL06L21906013

Refer to "Engine Stop / Starter Switch Inspection" in Section 1H (Page 1H-8).

Specifications

Tightening Torque Specifications

BENL06L21907001

Fastening part	Tightening torque			Note
	N·m	kgf-m	lbf-ft	
Starter motor mounting bolt	10	1.0	7.5	☞(Page 1I-5)
Starter motor lead wire mounting nut	6	0.61	4.45	☞(Page 1I-5)
Starter relay terminal bolt	4.4	0.45	3.25	☞(Page 1I-7)
Starter clutch bolt	25	2.5	18.5	☞(Page 1I-11)

Reference:
For the tightening torques of fasteners not specified in this page, refer to:
"Starter Motor Components" (Page 1I-4)
"Fasteners Information" in Section 0C (Page 0C-10)

Special Tools and Equipment

Recommended Service Material

BENL06L21908001

Material	SUZUKI recommended product or Specification		Note
Assembly lubrication	Molybdenum oil solution	—	☞(Page 1I-12)
	SUZUKI MOLY PASTE	P/No.: 99000–25140	☞(Page 1I-5)
Grease	SUZUKI SUPER GREASE A	P/No.: 99000–25011	☞(Page 1I-5) / ☞(Page 1I-5)
Thread lock cement	THREAD LOCK CEMENT 1303B	P/No.: 99000–32030	☞(Page 1I-11)

NOTE

Required service material(s) is also described in:
"Starter Motor Components" (Page 1I-4)

Special Tool

BENL06L21908002

09900–20102 Vernier calipers (200 mm) ☞(Page 1I-6) 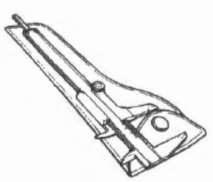	09930–44530 Rotor holder ☞(Page 1I-11) 
09930–44541 Rotor holder ☞(Page 1I-10) 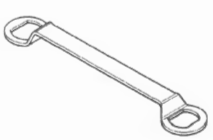	09930–73110 Starter torque limiter holder ☞(Page 1I-12) 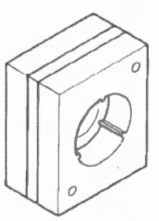
09930–73120 Starter torque limiter socket ☞(Page 1I-12) 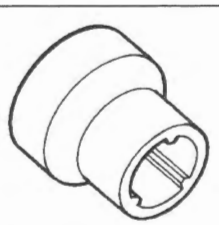	

Charging System

Schematic and Routing Diagram

Charging System Diagram

BENL06L21A02001

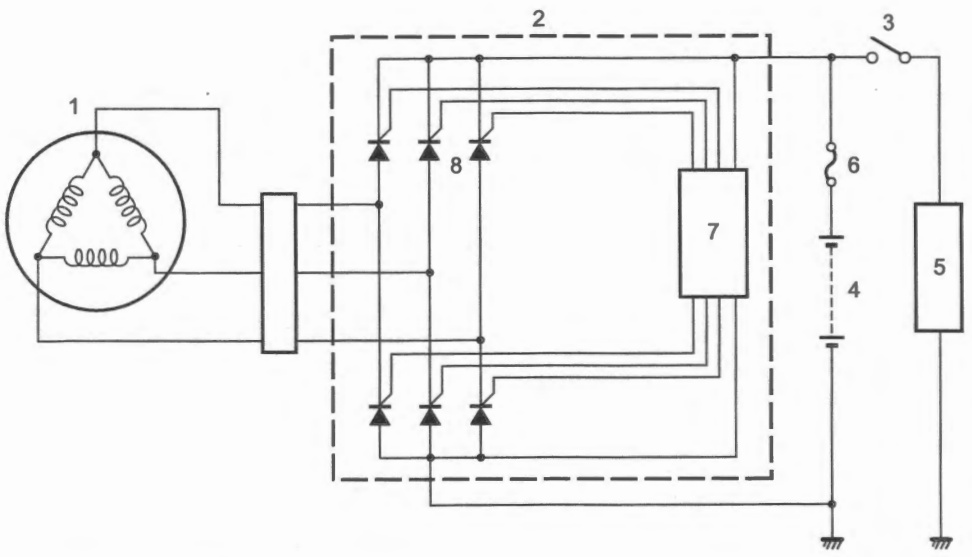

IE31J11A0027-01

1. Generator	4. Battery	7. IC
2. Regulator/rectifier	5. Load	8. SCR
3. Ignition switch	6. Main fuse	

Component Location

Charging System Components Location

BENL06L21A03001

Refer to "Electrical Components Location": Service Manual Information in Section 0A (Page 0A-10).

Diagnostic Information and Procedures

Charging System Symptom Diagnosis

BENL06L21A04001

Condition	Possible cause	Correction / Reference Item
Generator does not charge	Open- or short-circuited lead wires, or loose lead connections.	*Repair, replace or connect properly.*
	Short-circuited, grounded or open generator coil.	*Replace. ☞(Page 1J-5) ☞(Page 1J-7)*
	Short-circuited or punctured regulator/ rectifier.	*Replace. ☞(Page 1J-8)*
Generator does charge, but charging rate is below the specification	Lead wires tend to get short- or open-circuited or loosely connected at terminals.	*Repair or retighten.*
	Grounded or open-circuited generator coil.	*Replace. ☞(Page 1J-5) ☞(Page 1J-7)*
	Defective regulator/rectifier.	*Replace. ☞(Page 1J-8)*
	Defective cell plates in the battery.	*Replace the battery. ☞(Page 1J-10)*
Generator overcharges	Internal short-circuit in the battery.	*Replace the battery. ☞(Page 1J-10)*
	Damaged or defective regulator/rectifier.	*Replace. ☞(Page 1J-8)*
	Poorly grounded regulator/rectifier.	*Clean and tighten ground connection.*
Unstable charging	Lead wire insulation frayed due to vibration, resulting in intermittent short-circuiting.	*Repair or replace.*
	Internally short-circuited generator.	*Replace. ☞(Page 1J-5) ☞(Page 1J-7)*
	Defective regulator/rectifier.	*Replace. ☞(Page 1J-8)*
Battery overcharges	Faulty regulator/rectifier.	*Replace. ☞(Page 1J-8)*
	Faulty battery.	*Replace. ☞(Page 1J-10)*
	Poor contact of generator lead wire coupler.	*Repair.*
Battery runs down quickly	Trouble in charging system.	*Check the generator, regulator/rectifier and circuit connections and make necessary adjustments to obtain specified charging operation. ☞(Page 1J-4)*
	Cell plates have lost much of their active materials a result of overcharging.	*Replace the battery and correct the charging system. ☞(Page 1J-10)*
	Internal short-circuit in the battery.	*Replace the battery. ☞(Page 1J-10)*
	Too low battery voltage.	*Recharge the battery fully. ☞(Page 1J-9)*
	Too old battery.	*Replace the battery. ☞(Page 1J-10)*
Battery "sulfation"	Incorrect charging rate. (When not in use battery should be checked at least once a month to avoid sulfation.)	*Replace the battery. ☞(Page 1J-10)*
	The battery was left unused in a cold climate for too long.	*Replace the battery if badly sulfated. ☞(Page 1J-10)*
"Sulfation", acidic white powdery substance or spots on surface of cell plates	Cracked battery case.	*Replace the battery. ☞(Page 1J-10)*
	Battery has been left in a run-down condition for a long time.	*Replace the battery. ☞(Page 1J-10)*

Battery Runs Down Quickly

BENL06L21A04002

Troubleshooting

Step 1

Check accessories which use excessive amounts of electricity.

Are accessories installed?

Yes — Remove accessories.

No — Go to Step 2.

Step 2

Check the following points of battery.

- Tightening state of the battery lead wire mounting bolts. ☞(Page 1J-10)
- Visual of the battery. ☞(Page 1J-10)

Is check result OK?

Yes — Go to Step 3.

No
- Loose battery lead wire mounting bolts.
- Faulty battery.

Step 3

Check the battery for current leakage. ☞(Page 1J-4)

Is the battery for current leakage OK?

Yes — Go to Step 4.

No
- Short circuit of wire harness.
- Faulty electrical equipment.

Step 4

Measure the regulated voltage between the battery terminals. ☞(Page 1J-4)

Is the regulated voltage OK?

Yes
- Faulty battery.
- Abnormal driving condition.

No — Go to Step 5.

Step 5

Measure the resistance of the generator coil. ☞(Page 1J-4)

Is the resistance of generator coil OK?

Yes — Go to Step 6.

No
- Faulty generator coil.
- Poor contact of couplers.

Step 6

Measure the generator no-load performance. ☞(Page 1J-4)

Is the generator no-load performance OK?

Yes — Go to Step 7.

No — Faulty generator.

Step 7

1) Replace the regulator/rectifier with a new one. ☞(Page 1J-8)
2) Measure the regulated voltage between the battery terminals. ☞(Page 1J-4)

Is the regulated voltage OK?

Yes — End.

No
- Faulty wire harness.
- Poor contact of couplers.

Repair Instructions

Battery Current Leakage Inspection

BENL06L21A06001

1) Turn the ignition switch OFF.
2) Remove the seat and disconnect the battery (–) lead wire. ☞(Page 1J-10)
3) Measure the current between battery (–) terminal and the battery (–) lead wire using the multi circuit tester. If the reading exceeds the specified value, leakage is evident.

NOTICE

- **In case of a large current leak, turn the tester to high range first to avoid tester damage.**
- **Do not turn the ignition switch to ON position when measuring current.**

Battery leakage current
Under 3 mA

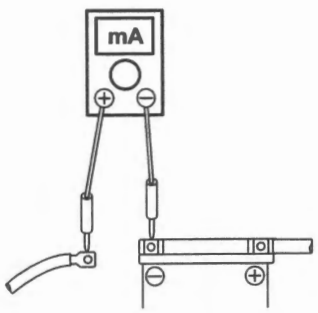

I649G11A0002-03

4) Connect the battery (–) terminal and install the seat. ☞(Page 1J-10)

Regulated Voltage Inspection

BENL06L21A06002

1) Remove the seat. ☞(Page 9D-27)
2) Start the engine and keep it running at 5000 r/min with the dimmer switch turned HI position.
3) Measure the DC voltage between the battery (+) and (–) terminals using the multi circuit tester. If the voltage is not within the specified value, inspect the generator and regulator/rectifier referring to step 5) – 7) in "Troubleshooting" under "Battery Runs Down Quickly" (Page 1J-3).

NOTE

When making this test, be sure that the battery is in fully charged condition.

Regulated voltage
Charging output
At 5000 r/min [Standard]: 13.5 – 15.0 V

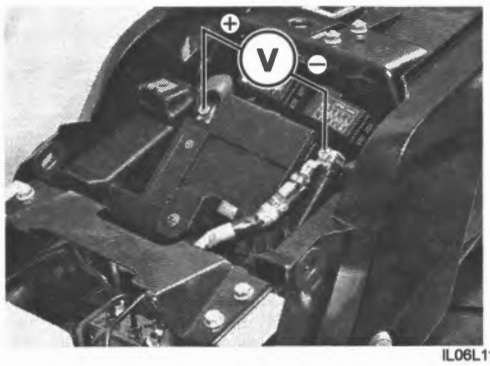

IL06L11A0001-01

Generator Inspection

BENL06L21A06003

Generator Coil Resistance

1) Lift and support the fuel tank. ☞(Page 1G-7)
2) Disconnect the generator lead wire coupler (1).

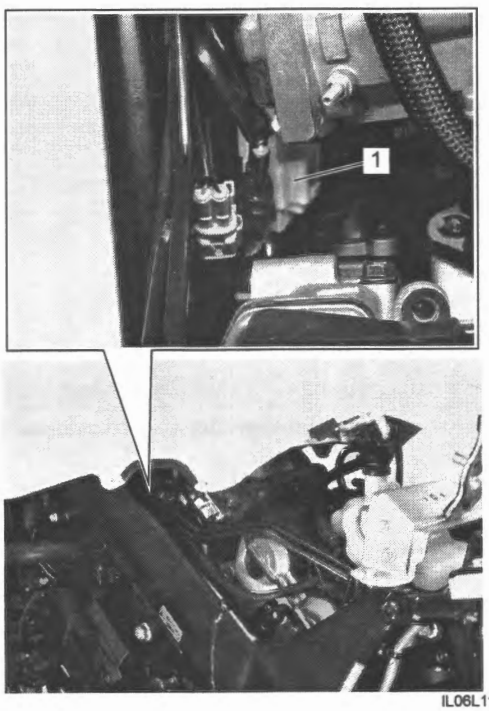

IL06L11A0002-03

3) Measure the generator coil resistance between the terminals of the generator coil.
If the resistance is out of specified value, replace the generator stator with a new one.

Generator coil resistance
[Standard]: 0.2 – 0.3 Ω

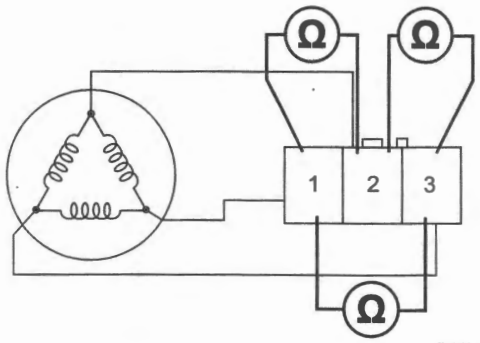

IL06L11A0020-01

4) Check that there is no continuity between "T1" and ground, "T2" and ground or "T3" and ground. If there is continuity, replace the generator stator with a new one.

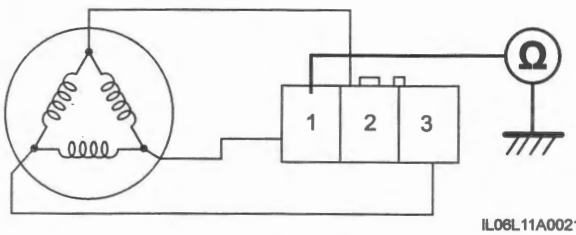

IL06L11A0021-01

No-load Performance

1) Lift and support the fuel tank. ☞(Page 1G-7)
2) Disconnect the generator lead wire coupler (1).

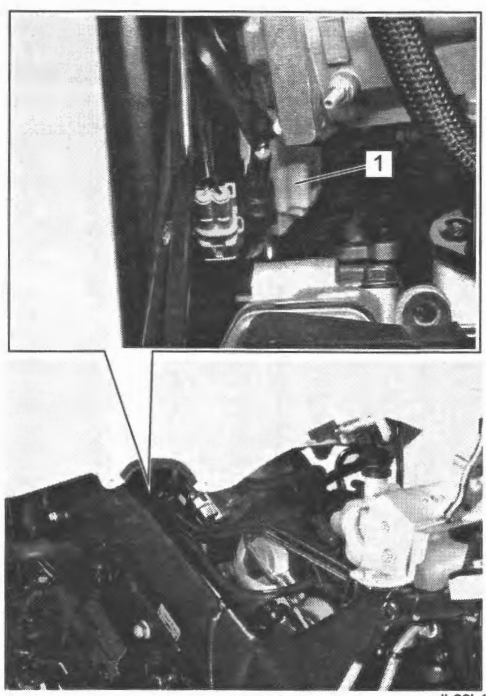

IL06L11A0002-03

3) Start the engine and keep it running at 5000 r/min.
4) Using the multi circuit tester, measure the voltage of the generator coil.
If the tester reads under the specified value, replace the generator stator with a new one.

Generator no-load voltage
When engine is cold
At 5000 r/min [Standard]: 50 V (AC) or more

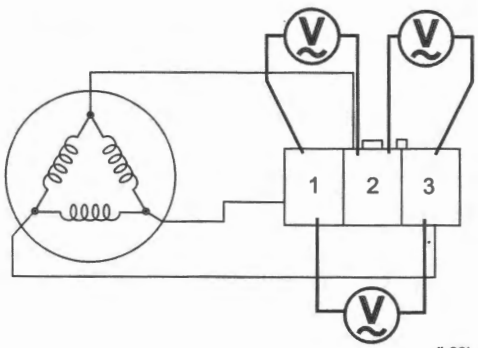

IL06L11A0022-01

Generator Removal

BENL06L21A06004

1) Remove the accessory bar. (If equipped): ☞(Page 9E-7)
2) Disconnect the battery (–) lead wire. ☞(Page 1J-10)
3) Drain engine oil. ☞(Page 0B-14)
4) Lift and support the fuel tank. ☞(Page 1G-7)
5) Disconnect the CKP sensor lead wire coupler (1) and generator lead wire coupler (2).

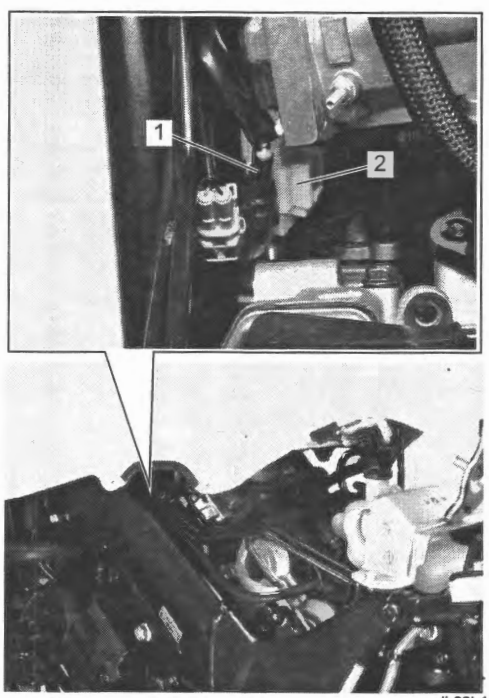

IL06L11A0003-02

6) Remove the clutch release cylinder (1). ☞(Page 5C-11)

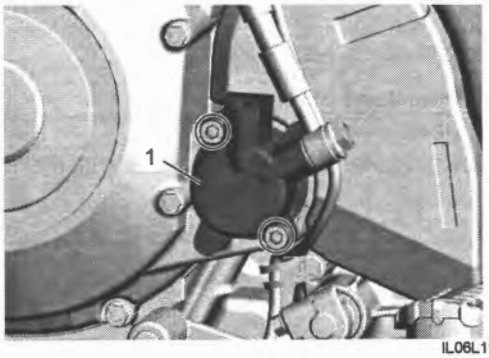

IL06L11A0004-02

7) EVAP canister No.2 bracket (1) and the generator cover (2) from the crankcase

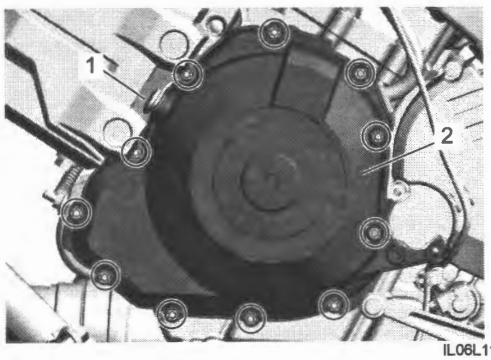

IL06L11A0005-02

8) Remove the gasket (1) and dowel pin (2) from the crankcase.

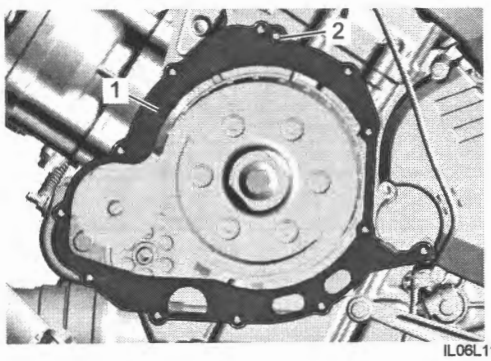

IL06L11A0006-02

9) Remove the torque limiter and starter idle gear. ☞(Page 1I-9)

10) Hold the generator rotor with the special tool and remove the generator rotor bolt from the generator.

Special tool
(A): 09930–44541

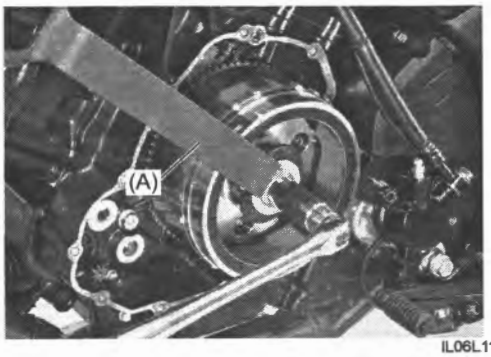

IL06L11A0007-01

11) Remove the generator rotor (1) from the crankshaft with the special tools.

Special tool
(A): 09930–44541
(B): 09930–30450

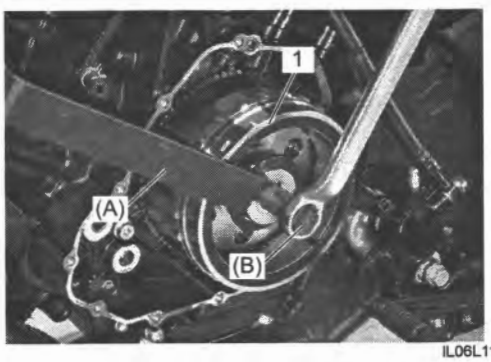

IL06L11A0008-01

12) Remove the generator stator (1), CKP sensor (2), generator lead wire clamp (3) and grommet(4) from the generator cover.

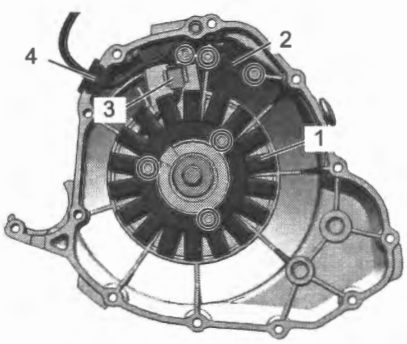

IL06L11A0009-02

Generator Installation

BENL06L21A06005

1) Insert the grommet (1) to the generator cover.
2) Apply thread lock to the generator stator bolts.

"A": Thread lock cement 99000–32030 (THREAD LOCK CEMENT 1303B)

3) Install the generator stator (2), CKP sensor (3) and generator lead wire clamp (4), and then tighten the bolts to the specified torque.

NOTE

Be careful not to pinch the generator lead wire between the generator cover ribs (5) and lead wire clamp.

Tightening torque
Generator stator bolt (a): 10 N·m (1.0 kgf-m, 7.5 lbf-ft)
CKP sensor bolt (b): 6.5 N·m (0.66 kgf-m, 4.80 lbf-ft)
Generator lead wire clamp bolt (c): 6.5 N·m (0.66 kgf-m, 4.80 lbf-ft)

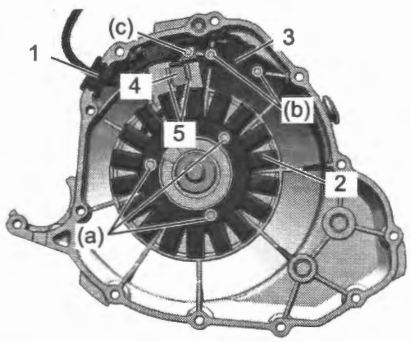

IL06L11A0010-02

4) Degrease the tapered portion (1) of crankshaft and also the generator rotor (2). Use nonflammable cleaning solvent to wipe off oily or greasy matter and make these surfaces completely dry.
5) Align the key (3) and key slot (4) on the generator rotor.

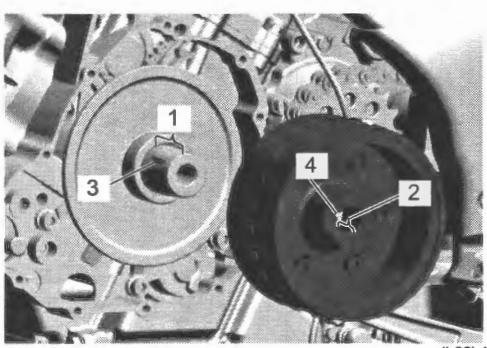

IL06L11A0023-01

6) Install the generator rotor (1) on the crankshaft.
7) Hold the generator rotor with the special tool and tighten its bolt to the specified torque.

Special tool
(A): 09930–44541

Tightening torque
Generator rotor bolt (a): 180 N·m (18.4 kgf-m, 133.0 lbf-ft)

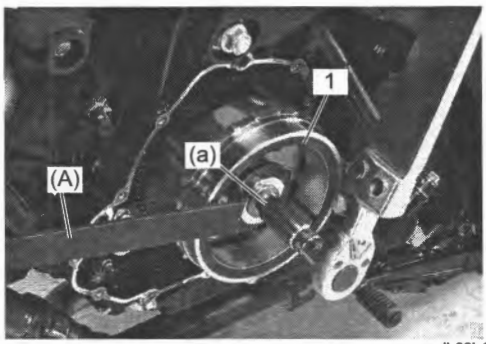

IL06L11A0012-02

8) Install the dowel pin (1) and new gasket (2).

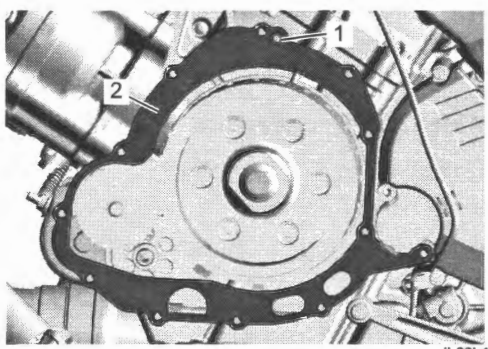

IL06L11A0013-02

9) Install the generator cover (1) and EVAP canister No.2 bracket (2).

⚠ CAUTION

Be careful not to pinch the finger between the generator cover and the crankcase.

Tightening torque
Generator cover bolt No.1 (a): 10 N·m (1.0 kgf-m, 7.5 lbf-ft)
Generator cover bolt No.2 (b): 10 N·m (1.0 kgf-m, 7.5 lbf-ft)

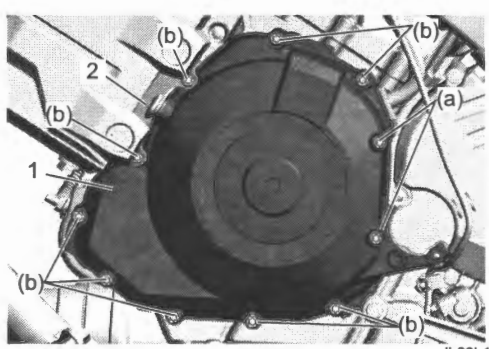

IL06L11A0014-02

10) Connect the generator coupler (1) and CKP sensor coupler (2).

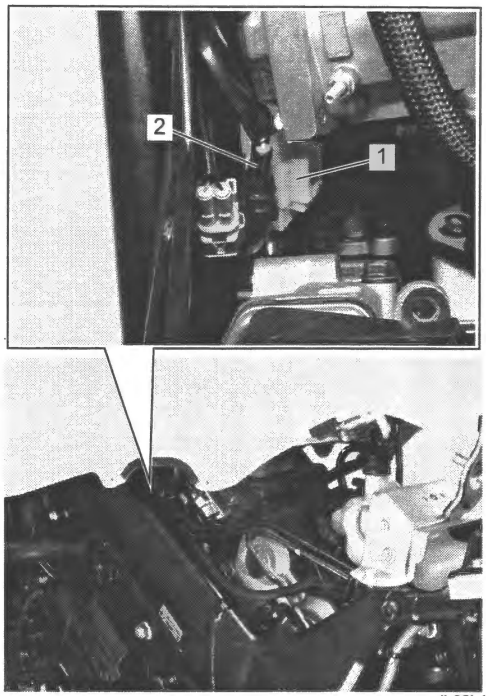

IL06L11A0015-02

11) Install the clutch release cylinder. ☞(Page 5C-11)
12) Connect the battery (–) lead wire. ☞(Page 1J-10)
13) Install the fuel tank. ☞(Page 1G-7)
14) Pour engine oil.☞(Page 0B-14)
15) Remove the accessory bar. (If equipped):☞(Page 9E-7)

Regulator / Rectifier Construction

BENL06L21A06006

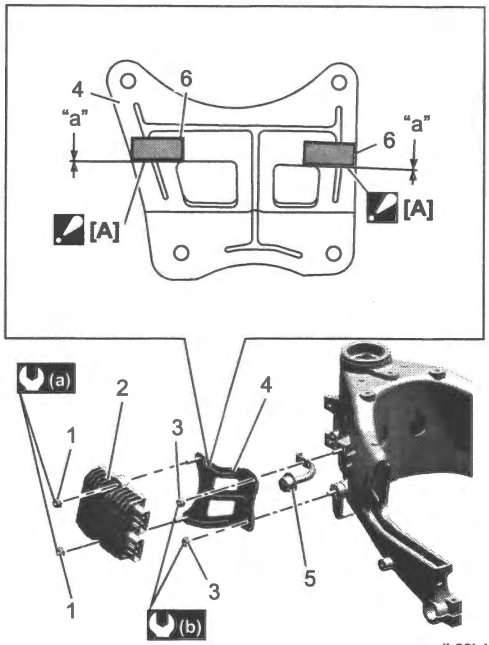

IL06L11A0016-02

[A]:	Align the corner of cushion with the hole of bracket. Do not protrude from the bracket.
1.	Regulator/rectifier nut
2.	Regulator/rectifier
3.	Regulator/rectifier bracket nut
4.	Regulator/rectifier bracket
5.	Fuel tank side cover bracket
6.	Regulator/rectifier bracket cushion "a": Less than 2 mm (0.08 in)
(a) :	6.5 N·m (0.66 kgf-m, 4.80 lbf-ft)
(b) :	10 N·m (1.0 kgf-m, 7.5 lbf-ft)

Regulator / Rectifier Removal and Installation

BENL06L21A06007

Removal

1) Remove the side cover assembly.☞(Page 9D-33)
2) Remove the fuel tank. ☞(Page 1G-7)
3) Disconnect the battery (–) lead wire. ☞(Page 1J-10)
4) Disconnect the regulator/rectifier couplers (1), and then remove the regulator/rectifier (2).

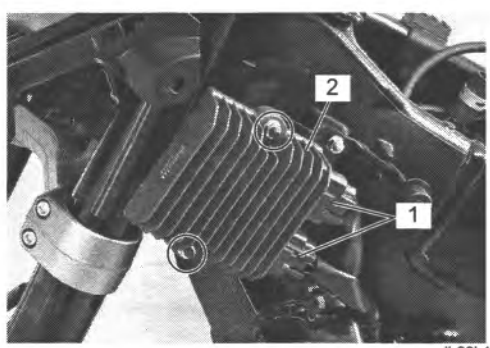

IL06L11A0017-02

Installation

Install the regulator/rectifier in the reverse order of removal. Pay attention to the following points:

- Tighten the regulator/rectifier nuts to the specified torque.

Tightening torque
Regulator/rectifier nut (a): 6.5 N·m (0.66 kgf-m, 4.80 lbf-ft)

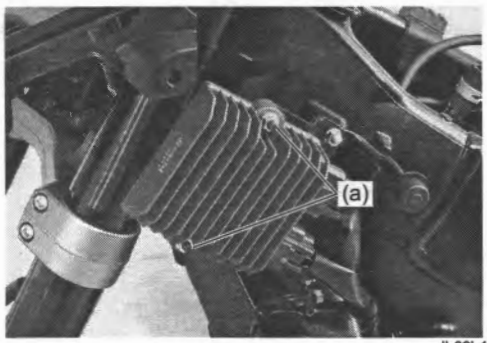

IL06L11A0024-01

Battery Charging

BENL06L21A06008

NOTICE

- **For charging the battery, read the instruction manuals of the battery and battery charger and follow the instructions properly.**
- **For charging the battery, follow the specified charging current and time. Otherwise, the battery may be overcharged and resulted in shortened service life of the battery.**
- **If the battery is left discharged to 11.5 V or less, the battery voltage may not recover fully after recharging and the battery may be discharged quickly during use.**
- **It is recommended to recharge the battery periodically with reference to the battery self-discharge rate by ambient temperature, so as not to drop the battery voltage below 12.4 V during the motorcycle storage to avoid shortening of the battery service life.**

Self discharge rate by environment

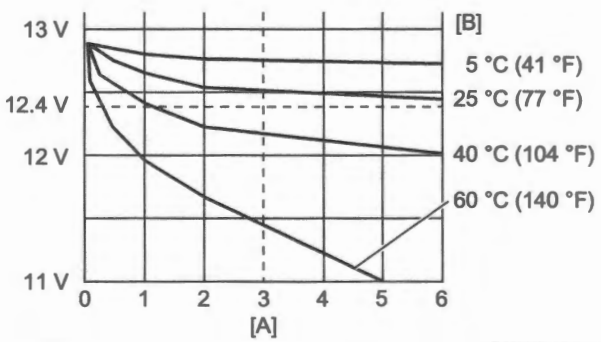

IH13K11A0031-01

[A]: Time (Month)	[B]: Ambient temperature

NOTE

For charging MF battery, use a charger applicable to MF battery.

1) Remove the battery from the motorcycle. ☞(Page 1J-10)
2) Measure the battery voltage.
   If the voltage reading is 12.4 V or less, recharge the battery.

Recharging time
Standard charging [Standard]: 1.1 A for 5 to 10 hours
Fast charging [Standard]: 5.5 A for 1 hours

3) After recharging, wait at least 30 minutes and then measure the battery voltage using the circuit tester. If the battery voltage is 12.4 V or less, recharge the battery again.
If the battery voltage is still 12.4 V or less after recharging, replace the battery with a new one.
4) Install the battery to the motorcycle. ☞(Page 1J-10)

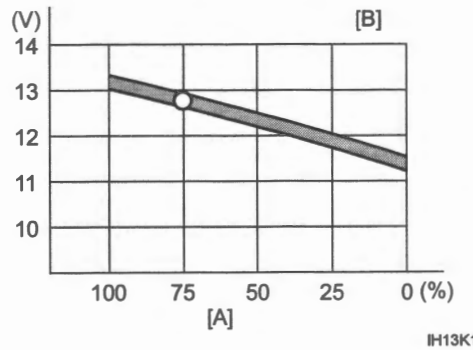

IH13K11A0032-02

[A]:	Battery charged condition
[B]:	Ambient temperature 0 – 40 °C (32 – 104 °F)

Battery Removal and Installation

BENL06L21A06009

Removal

1) Remove the seat. ☞(Page 9D-27)
2) Disconnect the battery (–) lead wire (1) first, then disconnect the battery (+) lead wire (2).
3) Remove the screw (3).
4) Remove the portion (4) on the battery holder lid (5) from the hole of the battery holder (6).
5) Unhook the projection (7) on the battery holder (6) from the hole of the battery holder lid (5), and then remove the battery holder lid (5).
6) Remove the battery (8).

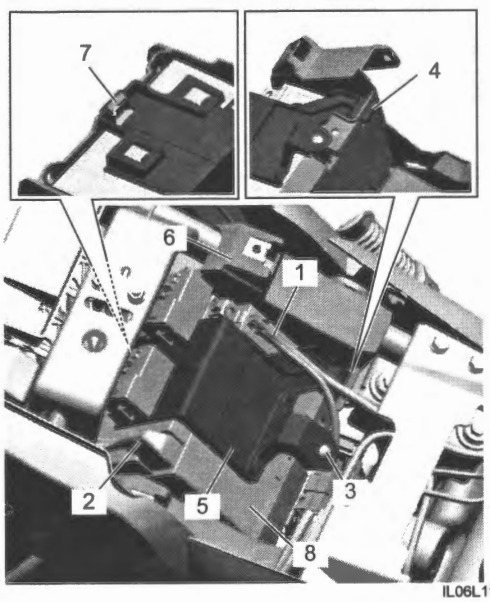

IL06L11A0018-01

Installation

Install the battery in the reverse order of removal. Pay attention to the following points:

NOTICE

Never use anything except the specified battery.

- Connect the battery (+) lead wire (1) first, then connect battery (–) lead wire (2).
- Tighten the battery lead wire mounting bolts securely.

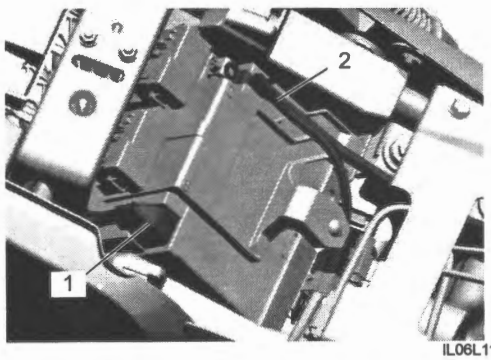

IL06L11A0019-02

Battery Visual Inspection

BENL06L21A06010

1) Remove the seat. ☞(Page 9D-27)
2) Visually inspect the surface of the battery container. If any signs of cracking or electrolyte leakage from the sides of the battery have occurred, replace the battery with a new one.
If the battery terminals are found to be coated with rust or an acidic white powdery substance, clean the battery terminals with sandpaper.
3) Install the seat. ☞(Page 9D-27)

Specifications

Tightening Torque Specifications

BENL06L21A07001

Fastening part	Tightening torque			Note
	N·m	kgf-m	lbf-ft	
Generator stator bolt	10	1.0	7.5	☞(Page 1J-7)
CKP sensor bolt	6.5	0.66	4.80	☞(Page 1J-7)
Generator lead wire clamp bolt	6.5	0.66	4.80	☞(Page 1J-7)
Generator rotor bolt	180	18.4	133.0	☞(Page 1J-7)
Generator cover bolt No.1	10	1.0	7.5	☞(Page 1J-7)
Generator cover bolt No.2	10	1.0	7.5	☞(Page 1J-7)
Regulator/rectifier nut	6.5	0.66	4.80	☞(Page 1J-9)

Reference:
For the tightening torques of fasteners not specified in this page, refer to:
"Regulator / Rectifier Construction" (Page 1J-8)
"Fasteners Information" in Section 0C (Page 0C-10)

Special Tools and Equipment

Recommended Service Material

BENL06L21A08001

Material	SUZUKI recommended product or Specification		Note
Thread lock cement	THREAD LOCK CEMENT 1303B	P/No.: 99000–32030	☞(Page 1J-7)

Special Tool

BENL06L21A08002

09930–30450 Rotor remover bolt ☞(Page 1J-6)	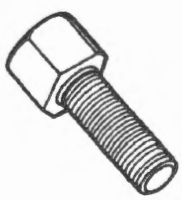	09930–44541 Rotor holder ☞(Page 1J-6) / ☞(Page 1J-6) / ☞(Page 1J-7)	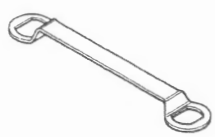

Exhaust System

Precautions

Precautions for Exhaust System

BENL06L21B00001

⚠ WARNING

To avoid the risk of being burned, do not touch the exhaust system when the system is hot.

NOTICE

After installation of the muffler, make sure that there is no leakage of exhaust gas.

Repair Instructions

Exhaust System Components

BENL06L21B06001

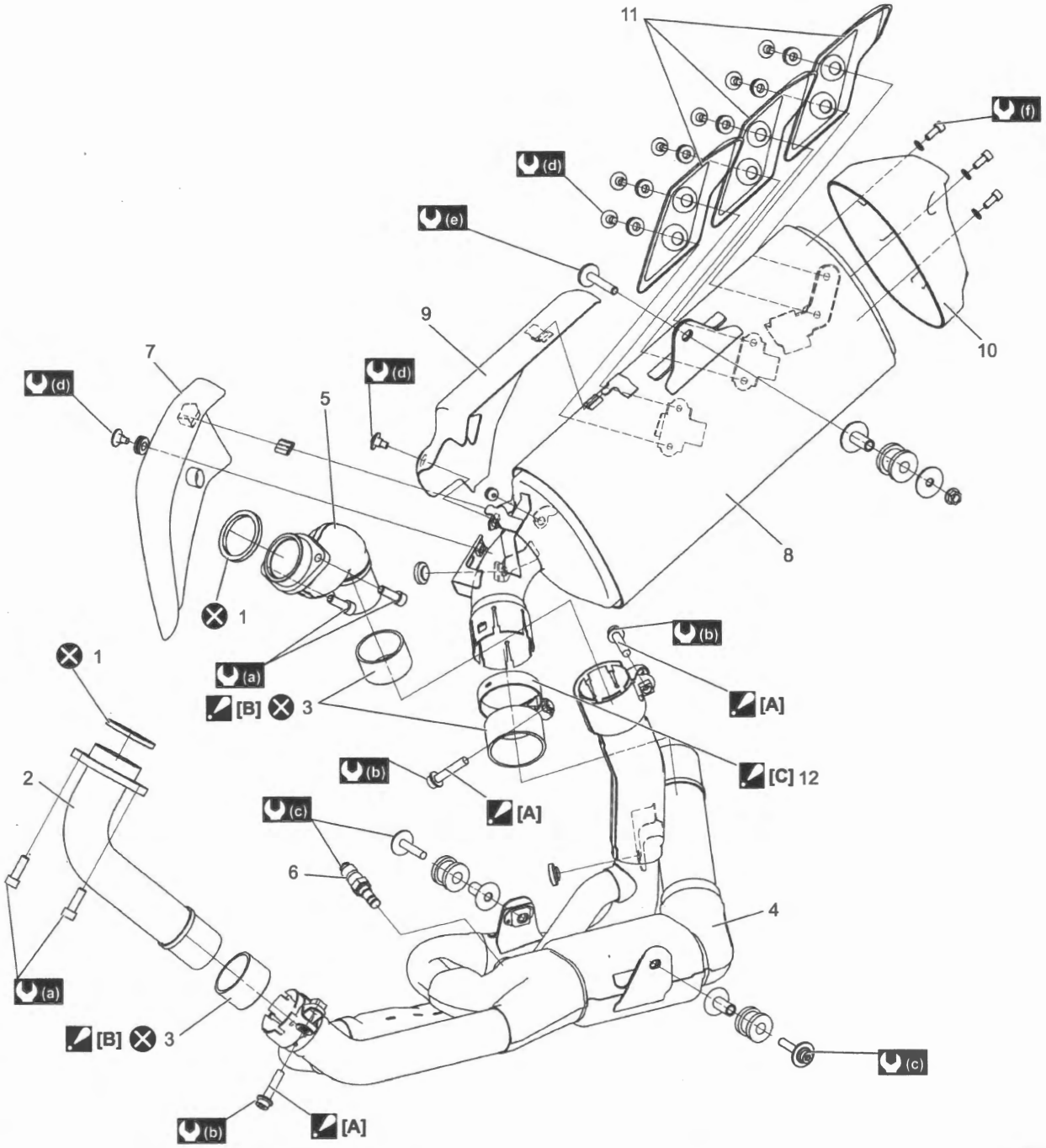

IL06L11B0024-01

[A]: Apply nickel based anti seize to the thread part.	6. HO2 sensor	(b) : 18 N·m (1.8 kgf-m, 13.5 lbf-ft)
[B]: Face the chamfer side of the connector to center exhaust pipe.	7. Muffler front cover	(c) : 25 N·m (2.5 kgf-m, 18.5 lbf-ft)
[C]: Fit the muffler connector clamp hole to the convex part of muffler.	8. Muffler	(d) : 5.5 N·m (0.56 kgf-m, 4.05 lbf-ft)
1. Exhaust pipe gasket	9. Muffler center cover	(e) : 30 N·m (3.1 kgf-m, 22.5 lbf-ft)
2. Front exhaust pipe	10. Muffler rear cover	(f) : 10 N·m (1.0 kgf-m, 7.5 lbf-ft)
3. Connector	11. Muffler cover No.1 (if equipped)	⊗ : Do not reuse.
4. Center exhaust pipe	12. Muffler connector clamp	
5. Rear exhaust pipe	(a) : 23 N·m (2.3 kgf-m, 17.0 lbf-ft)	

Exhaust Pipe / Muffler Removal

BENL06L21B06002

NOTICE

Applying a shock to the muffler may cause damage to the catalyst inside the muffler. Handle the muffler carefully. Be careful not to drop it or hit it against something.

Muffler Removal

1) Loosen the muffler connecting bolt (1).
2) Remove the muffler (2) from the frame and center exhaust pipe by removing the support bolt and nut (3).

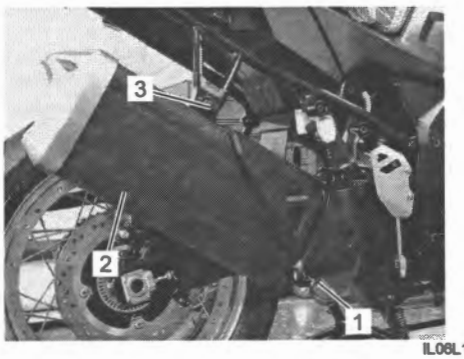

IL06L11B0002-01

3) Remove the muffler connector (1) from the center exhaust pipe.



IL06L11B0003-01

4) Remove the muffler front cover (1), muffler center cover (2), muffler rear cover (3) and muffler cover No.1 (4) (if equipped), if necessary.

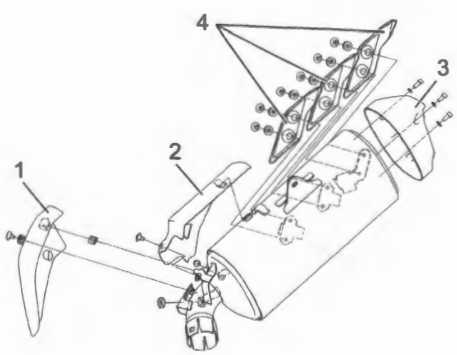

IL06L11B0004-01

Exhaust Pipe Removal

1) Remove the following parts. (If equipped)
   - Accessory bar: ☞(Page 9E-7)
   - Center stand: ☞(Page 9E-5)
2) Remove the frame front cover (RH). ☞(Page 9D-30).
3) Remove the muffler.
4) Disconnect the HO2 sensor lead wire coupler (1). ☞(Page 1C-8)

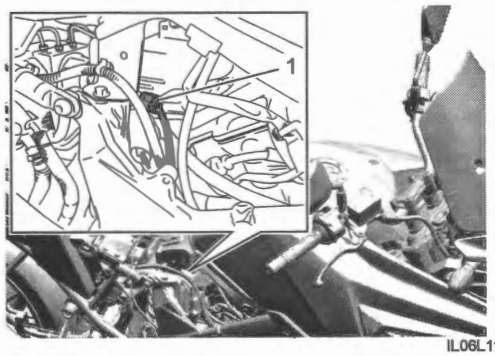

IL06L1130035-06

5) Loosen the rear exhaust pipe connecting bolt (1).



IL06L11B0006-01

6) Remove the front exhaust pipe (1) with the center exhaust pipe (2) from the cylinder head and frame by removing the bolts (3).

NOTE

Support the front exhaust pipe with the center exhaust pipe to prevent it from falling.

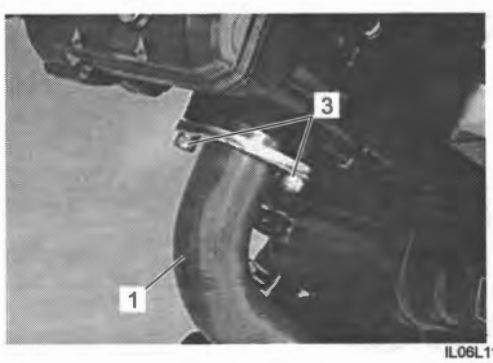

IL06L11B0007-02

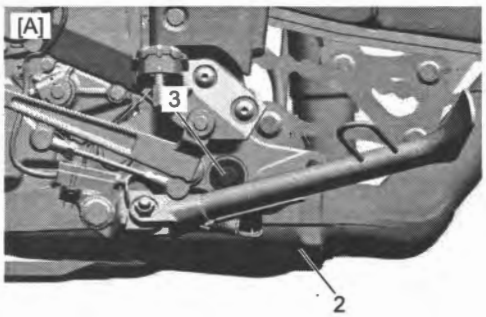

IL06L11B0008-02

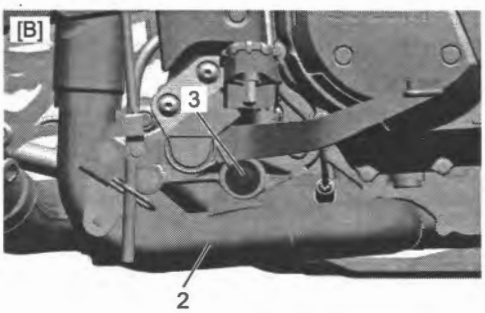

IL06L11B0025-01

[A]:	Left side
[B]:	Right side

7) Remove the front exhaust pipe gasket (1) from the cylinder head.

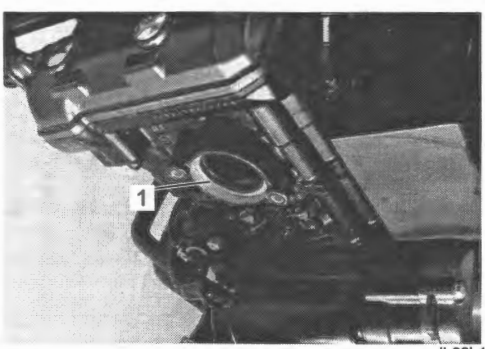

IL06L11B0009-01

8) Remove the rear exhaust pipe (1) and gasket (2) from the cylinder head.

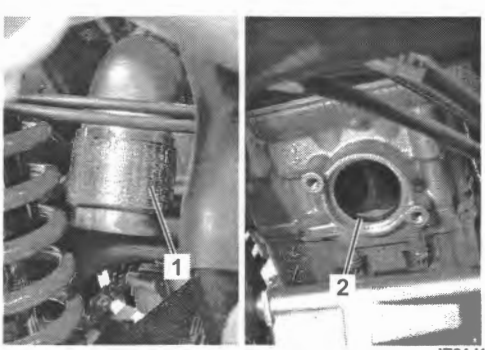

IE31J11B0054-01

9) Loosen the front exhaust pipe connecting bolt (1) and remove the front exhaust pipe (2) from the center exhaust pipe.

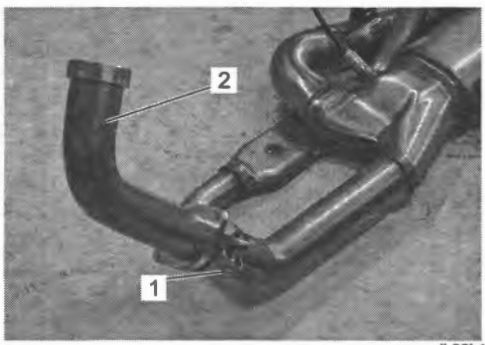

IL06L11B0010-01

10) Remove the front exhaust pipe connector (1) from the front exhaust pipe.

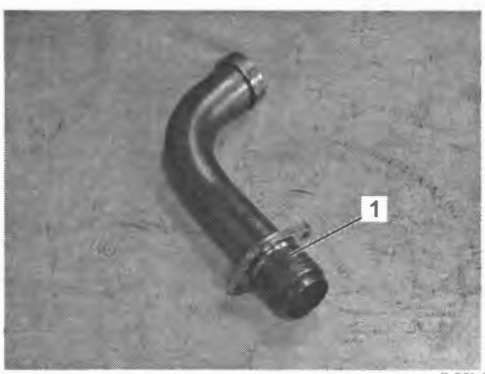

IL06L11B0011-01

11) Remove the HO2 sensor, if necessary.

NOTE

- **Be careful not to expose the HO2 sensor to an excessive shock.**
- **Do not use an impact wrench when removing the HO2 sensor.**
- **Be careful not to twist or damage the HO2 sensor lead wire.**

Exhaust Pipe / Muffler Installation

BENL06L21B06003

NOTICE

Applying a shock to the muffler may cause damage to the catalyst inside the muffler. Handle the muffler carefully. Be careful not to drop it or hit it against something.

Exhaust Pipe Installation

1) Install the HO2 sensor, if removed. ☞(Page 1C-8)
2) Install the new front and rear exhaust pipe gaskets (1).

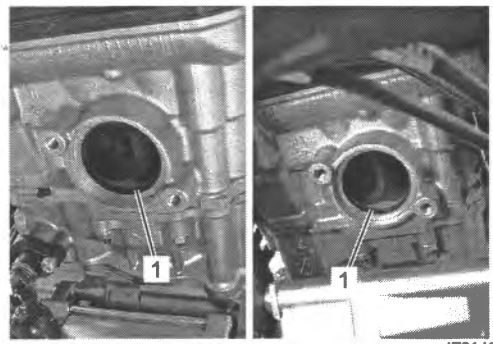

IE31J11B0059-01

3) Put the edge (1) of a new front and rear exhaust pipe connector (2) to the front and rear exhaust pipe stopper (3).

NOTE

Face the chamfer side [A] of the connector (2) to exhaust pipe stopper (3).

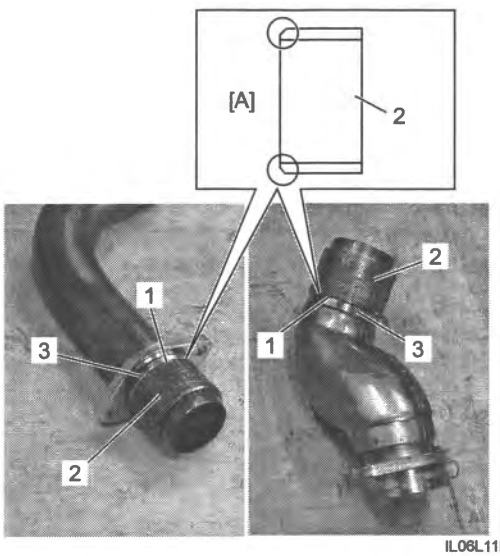

IL06L11B0012-02

4) Install the rear exhaust pipe (1) to the rear cylinder, and then tighten the exhaust pipe bolts to the specified torque.

Tightening torque
Exhaust pipe bolt (a): 23 N·m (2.3 kgf-m, 17.0 lbf-ft)

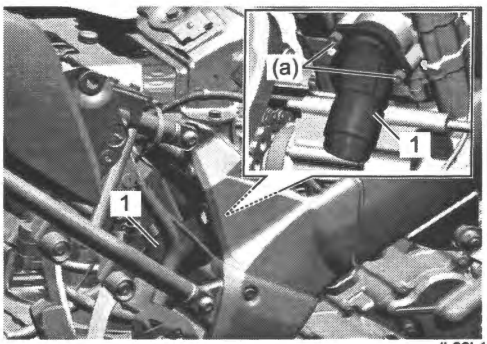

IL06L11B0013-02

5) Apply nickel based anti seize to the thread part of exhaust connecting bolts (1).

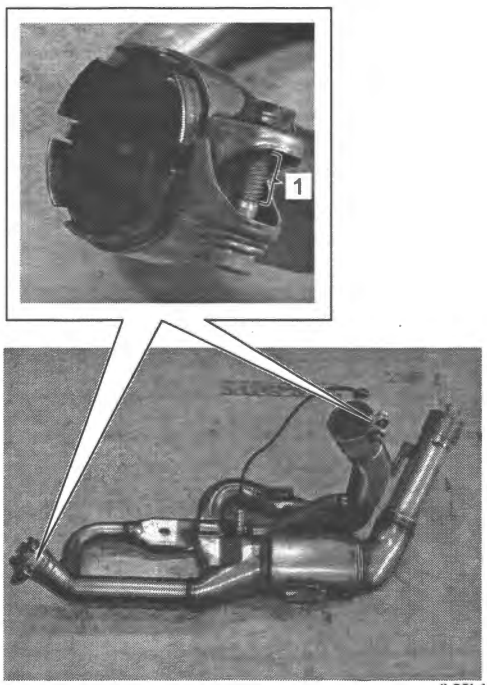

IL06L11B0014-02

6) Temporarily install the front exhaust pipe (1) to the center exhaust pipe (2).

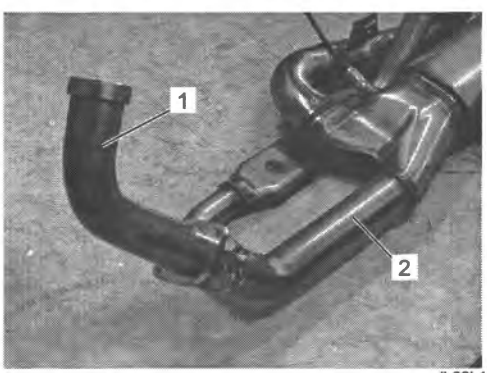

IL06L11B0015-01

7) Temporarily install the center exhaust pipe (1), and then install the center exhaust pipe bolts (2).
8) Tighten the center exhaust pipe bolts (2) and front exhaust pipe bolts (3) to the specified torque.

Tightening torque
Center exhaust pipe bolt (a): 25 N·m (2.5 kgf-m, 18.5 lbf-ft)
Front exhaust pipe bolt (b): 23 N·m (2.3 kgf-m, 17.0 lbf-ft)

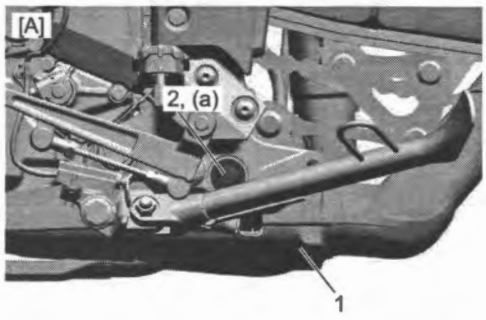

IL06L11B0016-02

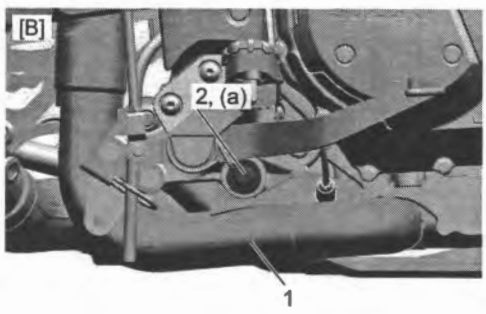

IL06L11B0026-01

[A]: Left side
[B]: Right side

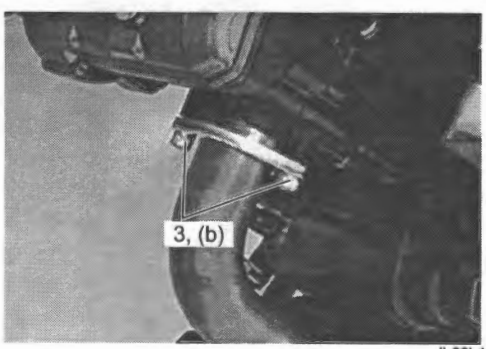

IL06L11B0017-02

9) Tighten the front exhaust pipe connecting bolt (1) and rear exhaust pipe connecting bolt (2) to the specified torque.

Tightening torque
Exhaust pipe connecting bolt (a): 18 N·m (1.8 kgf-m, 13.5 lbf-ft)

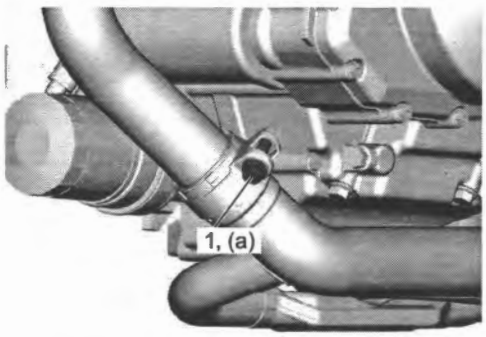

IL06L11B0019-02

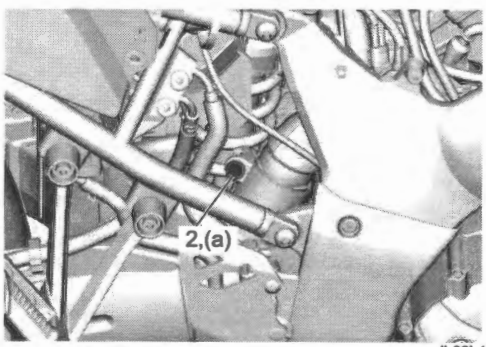

IL06L11B0027-01

10) Pass the HO2 sensor lead wire.☞(Page 1C-8)

Muffler Installation

1) Install the muffler rear cover (1) and tighten the muffler rear cover screws (2) to the specified torque in order of "1" → "2" → "3" → "4".

Tightening torque
Muffler rear cover screw (a): 10 N·m (1.0 kgf-m, 7.5 lbf-ft)

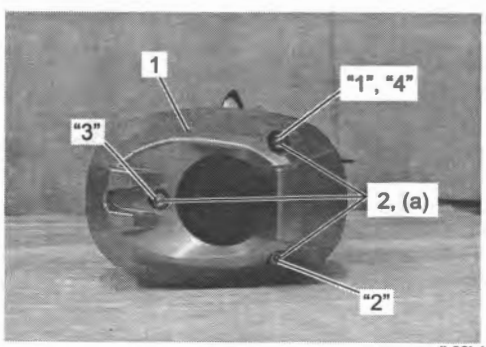

IL06L11B0018-01

2) Install the muffler cover No.1 (if equipped) (1), muffler center cover (2) and muffler front cover (3), and then tighten the bolts to specified torque.

Tightening torque
Muffler cover bolt (if equipped) (a): 5.5 N·m (0.56 kgf-m, 4.05 lbf-ft)
Muffler center cover bolt (b): 5.5 N·m (0.56 kgf-m, 4.05 lbf-ft)
Muffler front cover bolt (c): 5.5 N·m (0.56 kgf-m, 4.05 lbf-ft)

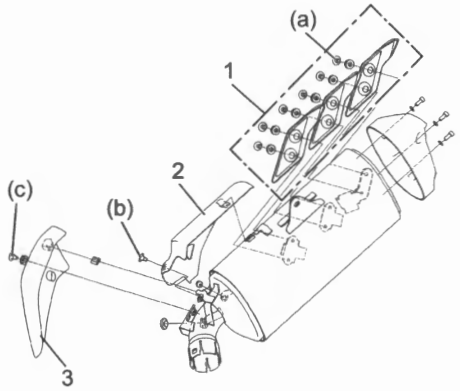

IL06L11B0020-02

3) Put the edge (1) of a new muffler connector (2) to the center exhaust pipe stopper (3).

NOTE

Face the chamfer side [A] of the connector (2) to exhaust pipe stopper (3).

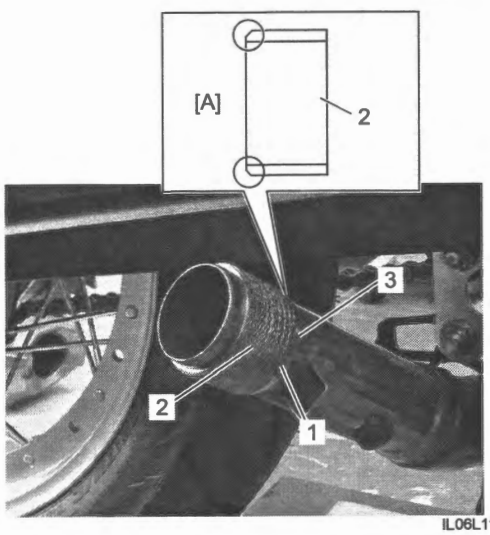

IL06L11B0021-02

4) Install the muffler connector clamp (1) to the muffler (2), if removed.

NOTE

Fit the muffler connector clamp hole (3) to the convex part (4) of muffler.

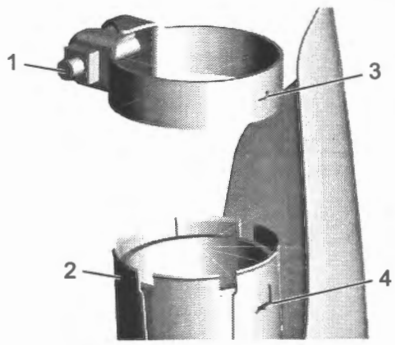

IL06L11B0028-02

5) Install the muffler (1), and then tighten the muffler support bolt (2) and muffler connecting bolt (3) to the specified torque.

Tightening torque
Muffler support bolt (a): 30 N·m (3.1 kgf-m, 22.5 lbf-ft)
Muffler connecting bolt (b): 18 N·m (1.8 kgf-m, 13.5 lbf-ft)

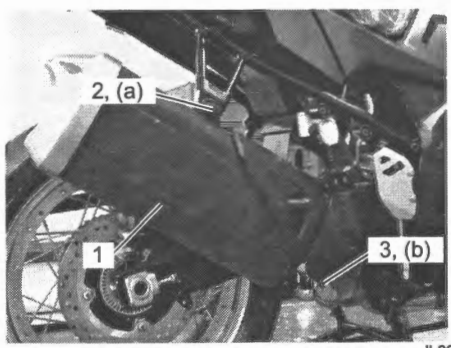

IL06L11B0029-01

Exhaust System Inspection

BENL06L21B06004

- Inspect the exhaust pipe connection and muffler connection for exhaust gas leakage and mounting condition. If any defect is found, replace the exhaust pipe assembly or muffler with a new one. Refer to "Exhaust Pipe / Muffler Removal" (Page 1K-3) and "Exhaust Pipe / Muffler Installation" (Page 1K-5).
- Check the exhaust pipe bolts and muffler mounting bolt to specified torque. Refer to "Exhaust Pipe Bolt and Muffler Mounting Bolts" in Section 0B (Page 0B-4).

Specifications

Tightening Torque Specifications

BENL06L21B07001

Fastening part	Tightening torque			Note
	N·m	kgf-m	lbf-ft	
Exhaust pipe bolt	23	2.3	17.0	☞(Page 1K-5)
Center exhaust pipe bolt	25	2.5	18.5	☞(Page 1K-6)
Front exhaust pipe bolt	23	2.3	17.0	☞(Page 1K-6)
Exhaust pipe connecting bolt	18	1.8	13.5	☞(Page 1K-6)
Muffler rear cover screw	10	1.0	7.5	☞(Page 1K-6)
Muffler cover bolt (if equipped)	5.5	0.56	4.05	☞(Page 1K-7)
Muffler center cover bolt	5.5	0.56	4.05	☞(Page 1K-7)
Muffler front cover bolt	5.5	0.56	4.05	☞(Page 1K-7)
Muffler support bolt	30	3.1	22.5	☞(Page 1K-7)
Muffler connecting bolt	18	1.8	13.5	☞(Page 1K-7)

Reference:
For the tightening torques of fasteners not specified in this page, refer to:
"Exhaust System Components" (Page 1K-2)
"Fasteners Information" in Section 0C (Page 0C-10)

Section 2

Suspension

CONTENTS

Precautions 2-1
Precautions 2-1
Precautions for Suspension 2-1

Suspension General Diagnosis 2A-1
Diagnostic Information and Procedures 2A-1
Suspension and Wheel Symptom Diagnosis 2A-1

Front Suspension 2B-1
Repair Instructions 2B-1
Front Fork Components 2B-1
Front Fork On-Vehicle Inspection 2B-2
Front Suspension Adjustment 2B-2
Front Fork Assembly Removal and Installation 2B-3
Front Fork Disassembly and Reassembly 2B-4
Front Fork Inspection 2B-11
Specifications 2B-11
Tightening Torque Specifications 2B-11
Special Tools and Equipment 2B-12
Recommended Service Material 2B-12
Special Tool 2B-12

Rear Suspension 2C-1
Repair Instructions 2C-1
Rear Suspension Components 2C-1
Rear Suspension On-vehicle Inspection 2C-2
Rear Shock Absorber Adjustment 2C-2
Rear Shock Absorber Removal and Installation 2C-2
Rear Shock Absorber Inspection 2C-4
Rear Shock Absorber Bearing Removal and Installation 2C-4
Rear Shock Absorber Disposal 2C-5
Cushion Lever Removal and Installation 2C-6
Cushion Lever Inspection 2C-7
Cushion Rod Removal and Installation 2C-7
Cushion Rod Inspection 2C-8
Cushion Rod Bearing / Dust Seal Removal and Installation 2C-8
Swingarm Removal and Installation 2C-9
Swingarm Inspection 2C-13
Swingarm Bearing Removal and Installation 2C-14
Specifications 2C-16
Tightening Torque Specifications 2C-16
Special Tools and Equipment 2C-16
Recommended Service Material 2C-16
Special Tool 2C-16

Wheels and Tires 2D-1
Precautions 2D-1
Precautions for Wheel and Tire 2D-1
Repair Instructions 2D-2
Front Wheel Components 2D-2
Front Wheel Assembly Construction (DL1050RC) 2D-4
Front Wheel Spoke Construction (DL1050RC) 2D-5
Front Wheel Assembly Removal and Installation 2D-5
Front Wheel Dust Seal / Front Wheel Bearing Removal and Installation 2D-7
Rear Wheel Components 2D-9
Rear Wheel Assembly Construction (DL1050RC) 2D-11
Rear Wheel Spoke Construction (DL1050RC) 2D-12
Rear Wheel Assembly Removal and Installation 2D-12
Rear Wheel Dust Seal / Rear Wheel Bearing Removal and Installation 2D-14
Wheel / Wheel Axle Inspection 2D-15
Rear Wheel Damper Removal and Installation 2D-18
Rear Wheel Damper Inspection 2D-18
Tire Inspection and Cleaning 2D-19
Tire Removal and Installation 2D-19
Wheel Rim / Air Valve Inspection and Cleaning 2D-20
Air Valve Removal and Installation 2D-20
Wheel Balance Check and Adjustment 2D-21
Specifications 2D-22
Tightening Torque Specifications 2D-22
Special Tools and Equipment 2D-22
Recommended Service Material 2D-22
Special Tool 2D-22

Precautions

Precautions

Precautions for Suspension

BENL06L22000001

Refer to "General Precautions" in Section 00 (Page 00-1).

⚠ WARNING

- **Never attempt to heat, quench or straighten any suspension part. If any damage or deformation is found, replace the part with a new one without correct it.**
- **When removing or installing the suspension or wheel, place the motorcycle on a level surface and support it securely with a hoist or jack etc.**
- **Do not support the motorcycle with the muffler.**

Suspension General Diagnosis

Diagnostic Information and Procedures

Suspension and Wheel Symptom Diagnosis

BENL06L22104001

Condition	Possible cause	Correction / Reference Item
Wobbly front wheel	Distorted wheel rim.	*Replace. ☞(Page 2D-19)*
	Worn front wheel bearings.	*Replace. ☞(Page 2D-7)*
	Defective or incorrect tire.	*Replace. ☞(Page 2D-19)*
	Loose front axle nut.	*Tighten. ☞(Page 2D-5)*
	Loose front axle pinch bolts.	*Tighten. ☞(Page 2D-5)*
	Incorrect fork oil level.	*Adjust. ☞(Page 2B-4)*
	Incorrect front wheel weight balance.	*Adjust. ☞(Page 2D-21)*
Front suspension too soft	Insufficient fork oil.	*Check level and add. ☞(Page 2B-4)*
	Weal spring.	*Replace. ☞(Page 2B-4)*
	Improperly set front fork spring pre-load adjuster.	*Adjust. ☞(Page 2B-2)*
	Improperly set front fork damping force adjuster.	*Adjust. ☞(Page 2B-2)*
	Deteriorated fork oil.	*Replace fork oil. ☞(Page 2B-4)*
Front suspension too stiff	Excessive fork oil.	*Check level and drain. ☞(Page 2B-4)*
	Bent front axle.	*Replace. ☞(Page 2D-5)*
	Improperly set front fork spring pre-load adjuster.	*Adjust. ☞(Page 2B-2)*
	Improperly set front fork damping force adjuster.	*Adjust. ☞(Page 2B-2)*
	Deteriorated fork oil.	*Replace fork oil. ☞(Page 2B-4)*
Front suspension too noisy	Insufficient fork oil.	*Check level and add. ☞(Page 2B-4)*
	Loose front suspension fastener.	*Tighten. ☞(Page 2B-3)*
	Deteriorated fork oil.	*Replace fork oil. ☞(Page 2B-4)*
Wobbly rear wheel	Distorted wheel rim.	*Replace. ☞(Page 2D-19)*
	Worn rear wheel bearings.	*Replace. ☞(Page 2D-14)*
	Defective or incorrect tire.	*Replace. ☞(Page 2D-19)*
	Worn swingarm bearings.	*Replace. ☞(Page 2C-14)*
	Loose rear suspension fastener.	*Tighten. ☞(Page 2C-2)*
	Loose rear axle nut.	*Tighten. ☞(Page 2D-12)*
	Worn rear suspension bearings.	*Replace. ☞(Page 2C-4)*
	Incorrect rear wheel weight balance.	*Adjust. ☞(Page 2D-21)*
Rear suspension too soft	Rear shock absorber leaks oil.	*Replace. ☞(Page 2C-2)*
	Improperly set rear shock absorber spring pre-load adjuster.	*Adjust. ☞(Page 2C-2)*
	Improperly set rear shock absorber damping force adjuster.	*Adjust. ☞(Page 2C-2)*
Rear suspension too stiff	Bent rear shock absorber shaft.	*Replace. ☞(Page 2C-2)*
	Worn swingarm bearings.	*Replace. ☞(Page 2C-14)*
	Worn rear suspension bearings.	*Replace. ☞(Page 2C-4)*
	Bent swingarm pivot shaft.	*Replace. ☞(Page 2C-9)*
	Improperly set rear shock absorber spring pre-load adjuster.	*Adjust. ☞(Page 2C-2)*
	Improperly set rear shock absorber damping force adjuster.	*Adjust. ☞(Page 2C-2)*
Rear suspension too noisy	Loose rear suspension fastener.	*Tighten. ☞(Page 2C-2)*
	Worn swingarm bearings.	*Replace. ☞(Page 2C-14)*
	Worn rear suspension bearings.	*Replace. ☞(Page 2C-4)*

Front Suspension

Repair Instructions

Front Fork Components

BENL06L22206001

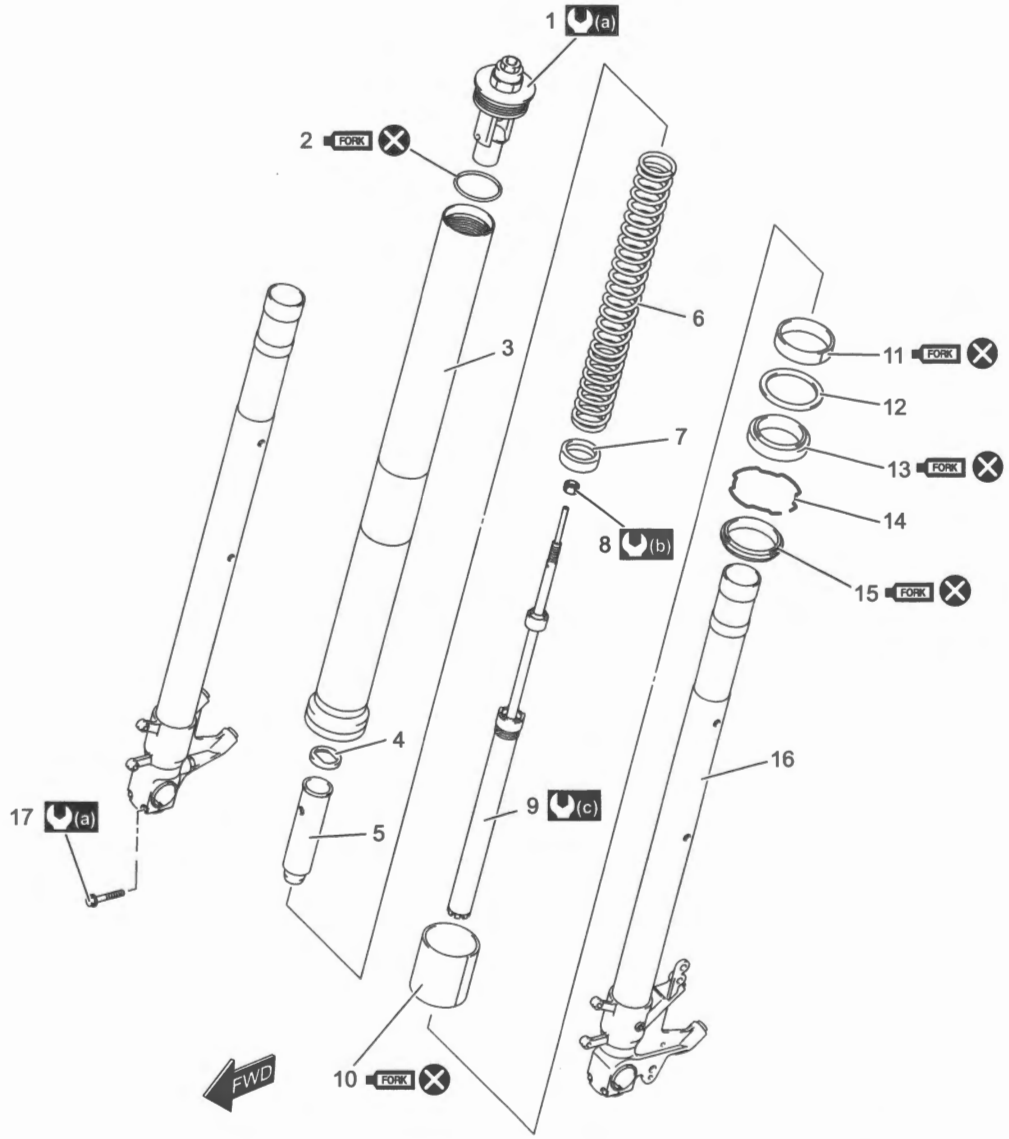

IE31J1220051-01

1. Front fork cap bolt	7. Spring seat	13. Oil seal	(b) : 15 N·m (1.5 kgf-m, 11.0 lbf-ft)
2. O-ring	8. Lock nut	14. Oil seal stopper ring	(c) : 70 N·m (7.0 kgf-m, 51.0 lbf-ft)
3. Outer tube	9. Inner rod/damper rod	15. Dust seal	FORK : Apply fork oil.
4. Spring retainer	10. Inner tube slide metal	16. Inner tube	⊗ : Do not reuse.
5. Spacer	11. Outer tube slide metal	17. Front axle pinch bolt	
6. Spring	12. Oil seal retainer	(a) : 23 N·m (2.3 kgf-m, 17.0 lbf-ft)	

Front Fork On-Vehicle Inspection

BENL06L22206002

Refer to "Front Fork Inspection" (Page 2B-11).

Front Suspension Adjustment

BENL06L22206003

NOTICE

Adjust the left and right front forks to the same setting.

Spring Pre-load Adjustment

- Turn the spring pre-load adjuster (1) counterclockwise fully. From that position (softest), turn it clockwise to the specified position "a".

Front fork spring pre-load
[Standard]: 11 mm (0.43 in)

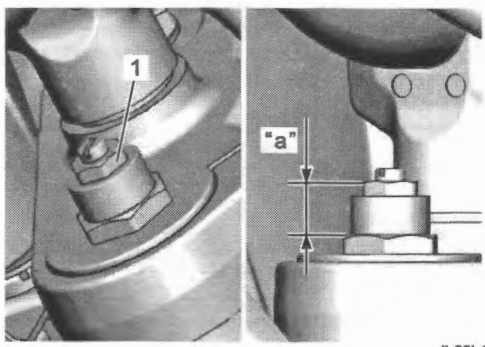

IL06L1220002-01

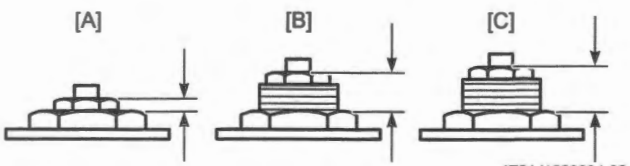

IE31J1220004-02

[A]: 4 mm (0.16 in) (maximum)	[C]: 14 mm (0.55 in) (minimum)
[B]: 11 mm (0.43 in) (standard)	

Damping Force Adjustment

Rebound damping force

Fully turn the damping force adjuster (1) clockwise. From that position (stiffest), turn it counterclockwise to standard setting position.

Front fork rebound damping force
[Standard]: 8 clicks counterclockwise out from stiffest position

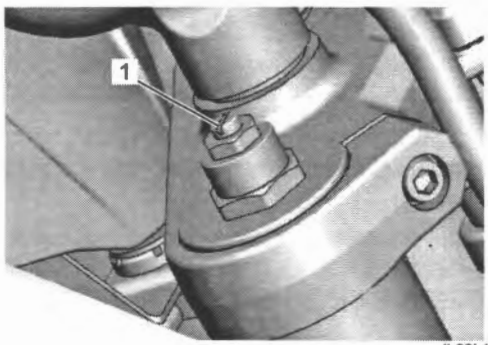

IL06L1220003-01

Compression damping force

Fully turn the damping force adjuster (1) clockwise. From that position (stiffest), turn it counterclockwise to the standard setting position.

Front fork compression damping force
[Standard]: 8 clicks counterclockwise from stiffest position

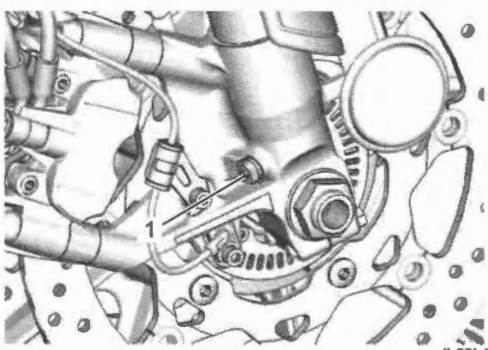

IL06L1220004-01

Front Fork Assembly Removal and Installation

BENL06L22206004

NOTE

The right and left front forks are installed symmetrically and therefore the removal procedure for one side is the same as that for the other side.

Removal

1) Remove the front wheel. ☞(Page 2D-5)
2) Remove the reflex reflectors. (If equipped) Refer to "Front Fender Construction" in Section 9D (Page 9D-9).
3) Disconnect the brake hoses from the clamps (1) on the front fender.
4) Remove the front wheel speed sensor lead wire clamp bolts (2).
5) Remove the front fender by removing the left and right bolts (3).

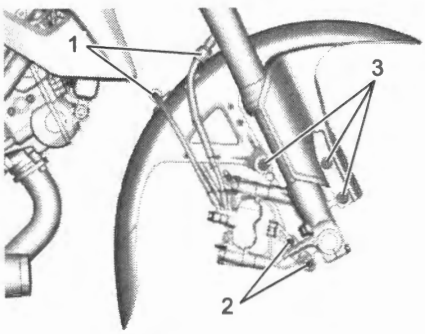

IL08L1220005-01

6) Loosen the front fork upper clamp bolt (1).

NOTE

Slightly loosen the front fork cap bolt (2) to facilitate later disassembly.

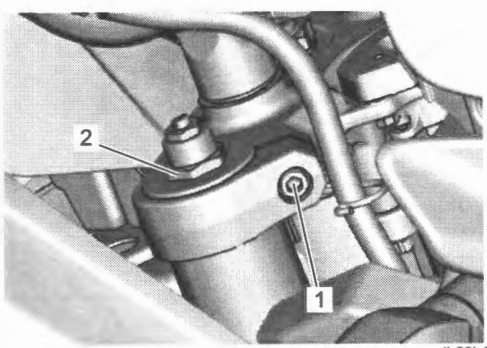

IL06L1220006-01

7) Loosen the front fork lower clamp bolts (1), and then remove the front fork (2) by supporting it.

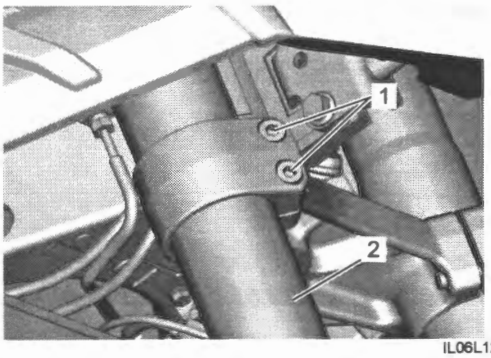

IL06L1220007-01

Installation

1) Set the front fork (1) to the steering stem lower bracket temporarily by tightening the lower clamp bolts (2).

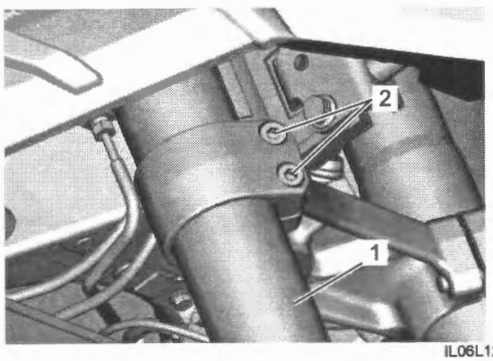

IL06L1220008-01

2) Tighten the front fork cap bolt (1) to the specified torque.

Tightening torque
Front fork cap bolt (a): 23 N·m (2.3 kgf-m, 17.0 lbf-ft)

3) Loosen the lower clamp bolts.
4) Set the top end of outer tube to the upper surface (2) of the steering stem upper bracket.

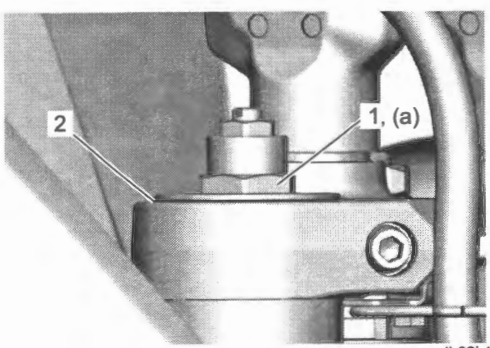

IL06L1220009-01

5) Tighten the front fork lower clamp bolts (1) to the specified torque.

Tightening torque
Front fork lower clamp bolt (a): 23 N·m (2.3 kgf-m, 17.0 lbf-ft)

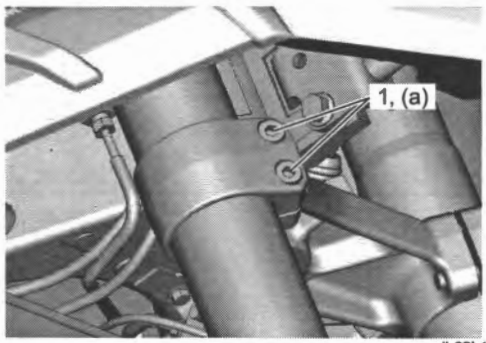

IL06L1220010-01

6) Tighten the front fork upper clamp bolt (1).

Tightening torque
Front fork upper clamp bolt (a): 23 N·m (2.3 kgf-m, 17.0 lbf-ft)

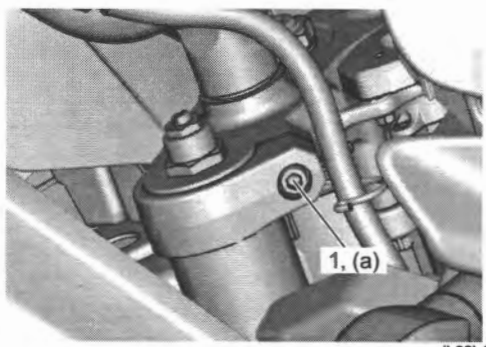

IL06L1220011-01

7) Install the front fender and tighten the front fender mounting bolts (1), left and right.

Tightening torque
Front fender mounting bolt (a): 12 N·m (1.2 kgf-m, 9.0 lbf-ft)

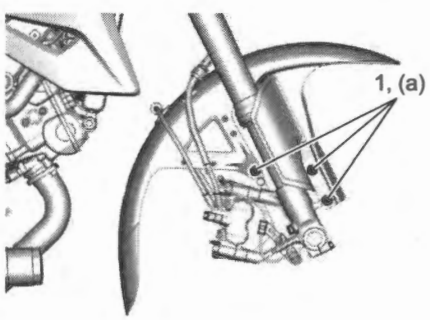

IL06L1220012-01

8) Install the removed parts.

Front Fork Disassembly and Reassembly

BENL06L22206005

Refer to "Front Fork Assembly Removal and Installation" (Page 2B-3).

NOTICE

Do not disassemble the front fork cap bolt (1) and stopper (2).

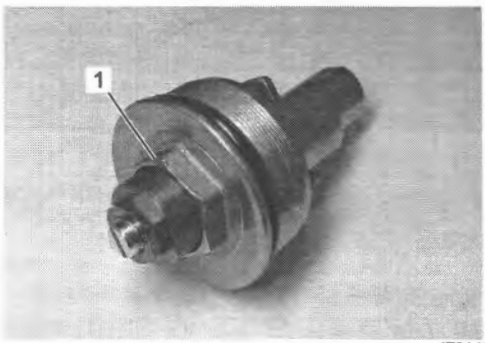

IE31J1220015-01

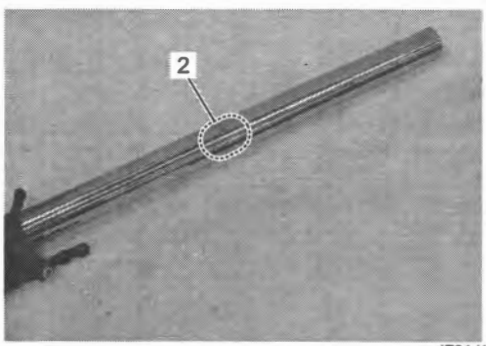

IE31J1220016-01

NOTE

The right and left front forks are installed symmetrically and therefore the disassembly procedure for one side is the same as that for the other side.

Disassembly

1) Remove the front axle pinch bolts (1).

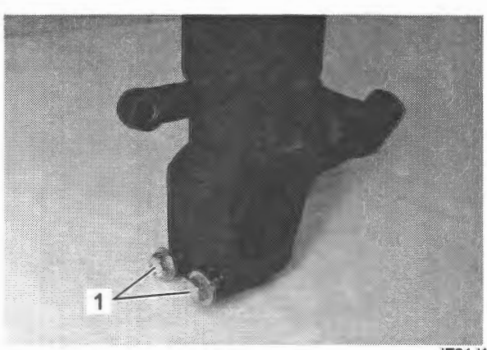

IE31J1220017-01

2) Loosen the front fork cap bolt (1).
3) Install the special tool to the holes (2) on the spacer.

Special tool
(A): 09940–94930

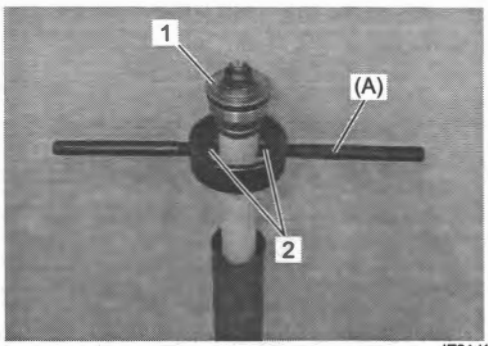

IE31J1220018-01

4) Set the special tool (A) referring to the manual.
5) Compress the fork spring using the special tool (A) and insert the special tool (B) between the lock-nut (1) and spring retainer (2).

Special tool
(A): 09940–93110
(B): 09940–94922

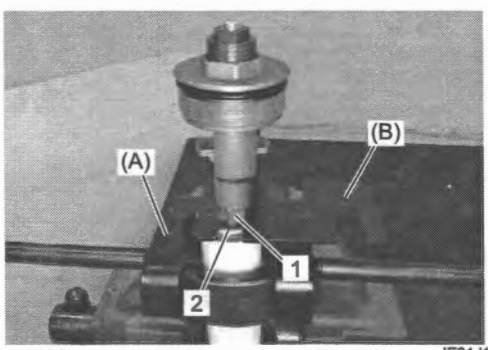

IE31J1220019-01

6) Remove the front fork cap bolt (1) from the inner rod/ damper rod by loosening the lock-nut (2).
7) Remove the special tool (B).

Special tool
(A): 09940–93110
(B): 09940–94922

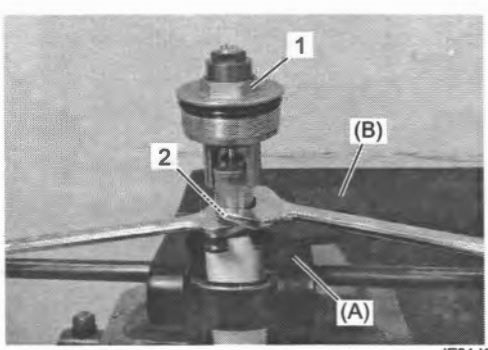

IE31J1220020-02

8) Remove the special tool (A) and remove the spring retainer (1) and spacer (2).

NOTE

Hold front fork leg by hand to prevent it sliding out of the outer tube.

Special tool
(A): 09940–94930

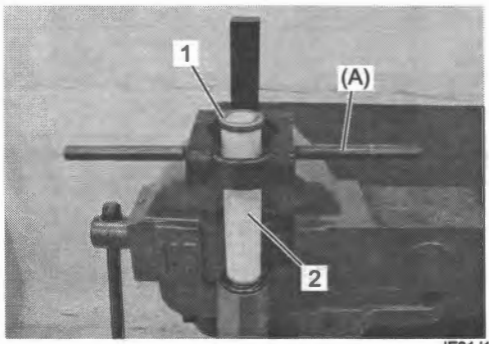

IE31J1220021-01

9) Remove the adjuster rod (1), lock-nut (2) and spring (3).

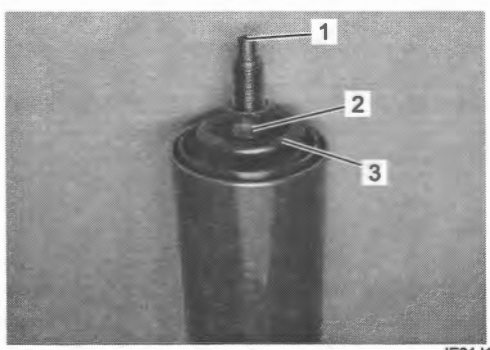

IE31J1220022-01

10) Invert the fork and stroke the inner rod/damper rod several times to drain out fork oil.
11) Hold the fork inverted for a few minutes to drain oil.

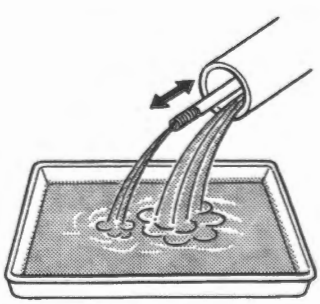
IE31J1220023-01

12) Remove the dust seal (1).
13) Remove the oil seal stopper ring (2).

NOTICE

- **Scratches on the inner tube could cause oil leaks.**
- **Avoid scratching when removing.**

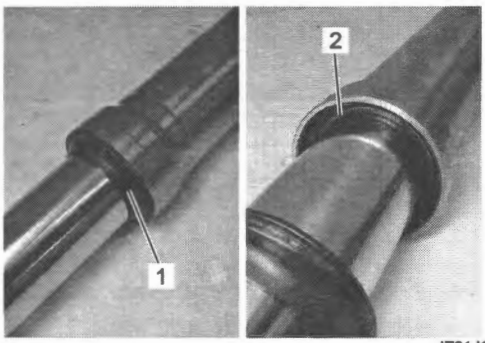

IE31J1220025-01

14) Remove the oil seal (1) by pulling out the inner tube (2).

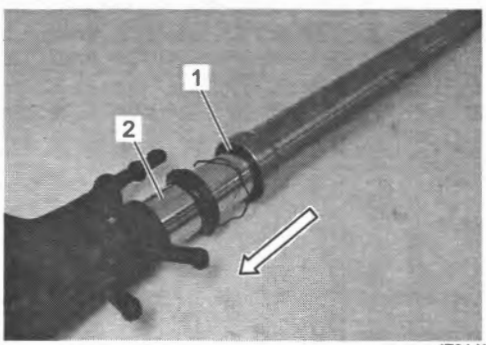

IE31J1220026-01

15) Remove the following parts from the inner tube.
- Inner tube slide metal (1)
- Outer tube slide metal (2)
- Oil seal retainer (3)
- Oil seal (4)
- Oil seal stopper ring (5)
- Dust seal (6)

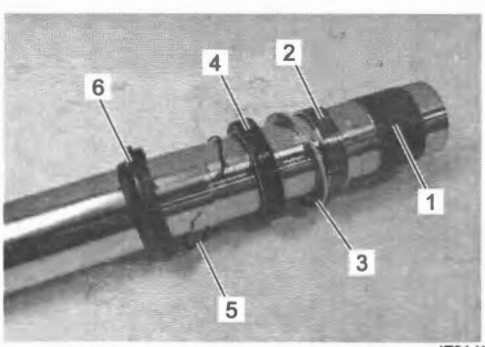

IE31J1220027-01

16) Loosen the inner rod/damper rod using the special tool.

Special tool
(A): 09940–30221

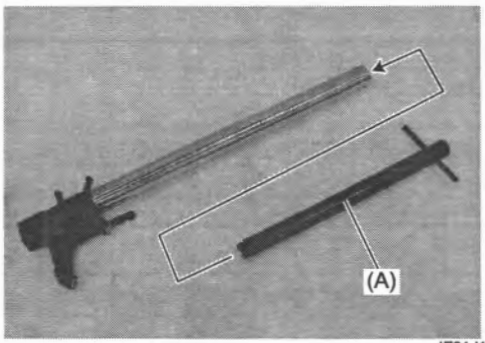

IE31J1220028-02

17) Remove the spring seat (1) and inner rod/damper rod (2).

NOTE

Do not disassemble the inner rod/damper rod.

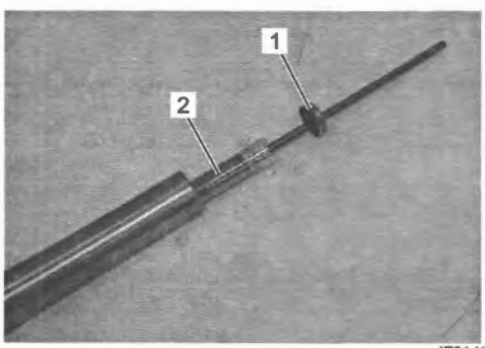

IE31J1220029-01

Reassembly

NOTICE

- **Thoroughly wash all the component parts being assembled.**
  Insufficient washing can result in oil leakage or premature wear of the parts.
- **When reassembling the front fork, use new fork oil.**
- **Use the specified fork oil for the front fork.**

1) Cover the inner tube with a plastic film.

NOTICE

Scratches on the oil seal lip may cause oil leakage. When installing the seals, place a plastic film over the slide bushing groove and edges of the inner tube to avoid damaging the seals' lip.

2) Install the following parts to the inner tube.
   - New dust seal (1)
   - Stopper ring (2)
   - New oil seal (3)

NOTE

Face the stamp mark side of the oil seal to the dust seal side.

3) Apply fork oil to the dust seal lip and oil seal lip.

"A": Fork oil 99000–99044–L01 (SUZUKI FORK OIL L-01)

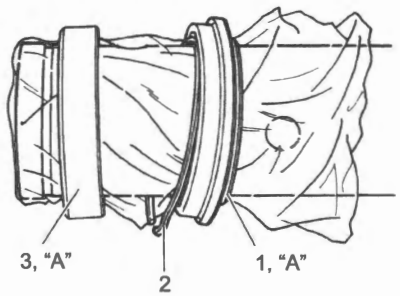

IE31J1220030-01

4) Remove the plastic film and install the oil seal retainer (1), new outer tube slide metal (2) and new inner tube slide metal (3) keep them free from dust.

5) Apply fork oil to the outer slide metal (2) and inner tube slide metal (3).

"A": Fork oil 99000–99044–L01 (SUZUKI FORK OIL L-01)

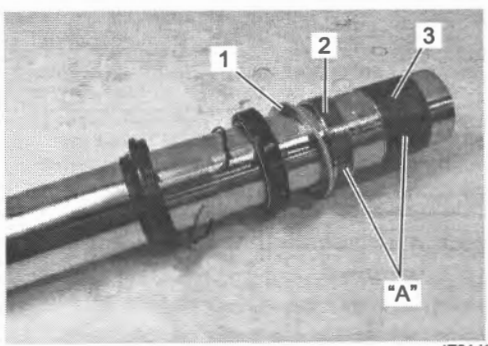

IE31J1220032-01

6) Insert the inner tube into the outer tube.

7) Press fit the oil seal (1) using the special tools until the stopper ring groove on the outer tube can be seen.

Special tool
(A): 09940–52861

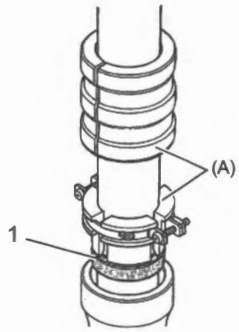

ID26J1220024-02

8) When installing the stopper ring (1), make sure that the stopper ring is fitted securely into the groove.

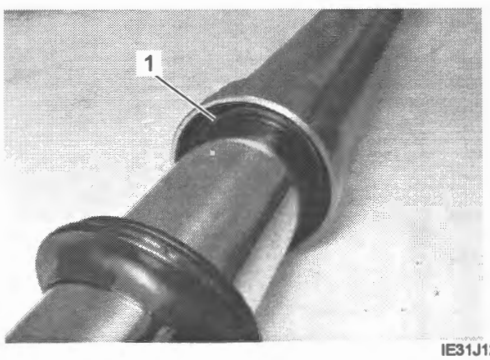

IE31J1220033-02

9) Press fit the dust seal (1).

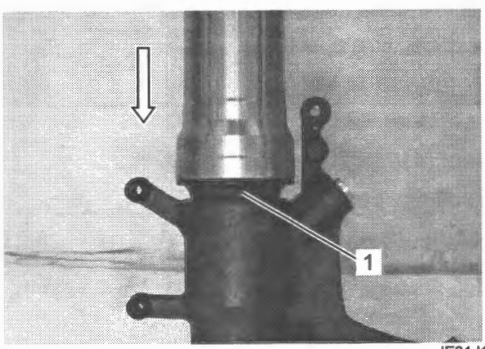

IE31J1220034-01

10) Install the inner rod/damper rod (1) and into the inner tube.

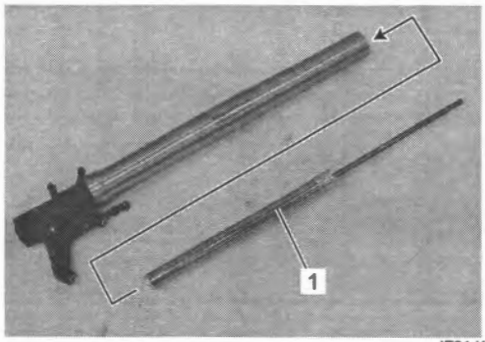

IE31J1220035-01

11) Tighten inner rod/damper rod to the specified torque using the special tools.

Special tool
(A): 09940–30221
(B): 09940–54860

Tightening torque
Inner rod/damper rod (a): 70 N·m (7.0 kgf-m, 51.0 lbf-ft)

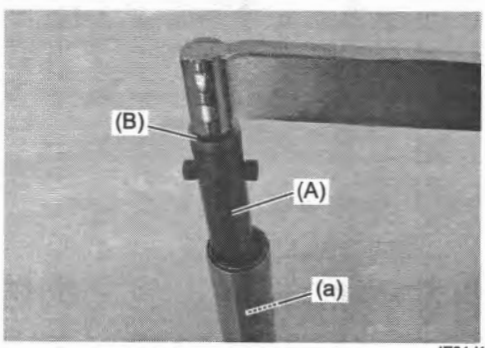

IE31J1220036-01

12) Install the spring seat (1) into the inner tube.

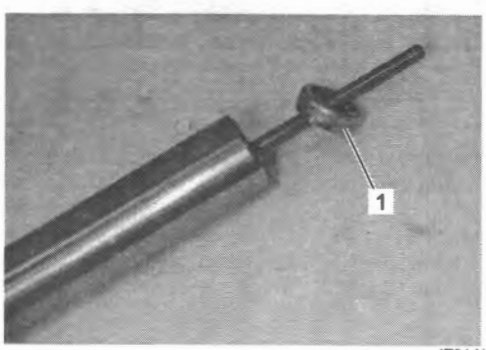

IE31J1220037-01

13) Place the front fork vertically without spring.
14) Compress it fully.
15) Pour specified front fork oil up to the top level of the inner tube.

"A": Fork oil 99000–99044–L01 (SUZUKI FORK OIL L-01)

Front fork oil capacity
Each leg [Standard]: 597 ml (20.19 US oz, 21.01 Imp oz)

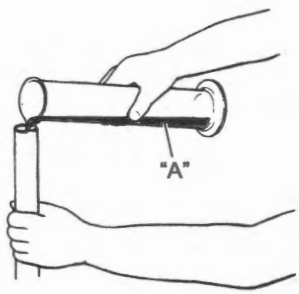

ID26J1220030-01

16) Move the inner rod/damper rod slowly using the special tool (A) more than ten times until bubbles do not come out from the oil.

NOTE

Refill front fork oil up to the top of the inner tube to find bubbles while bleeding air.

Special tool
(A): 09940–52841

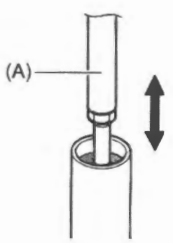

IE31J1220038-01

17) Refill specified front fork oil up to the top level of the inner tube again. Move the outer tube up and down several strokes until bubbles do not come out from the oil.

18) Keep the front fork vertically and wait 5 – 6 minutes.

NOTE

- **Always keep oil level over the inner rod/ damper rod top end, or air may enter the inner rod/damper rod during this procedure.**
- **Take extreme attention to pump out air completely.**

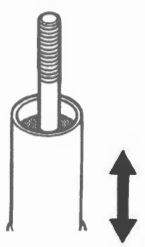

IE31J1220039-01

19) Hold the front fork vertically and adjust fork oil level "a" with the special tool.

NOTE

When adjusting the fork oil level, remove the fork spring and compress the outer tube fully.

Front fork oil level
[Standard]: 113 mm (4.45 in)

Special tool
(A): 09943–74111

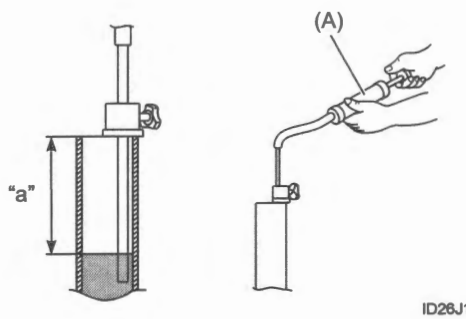

ID26J1220031-02

20) Install the fork spring (1) into the inner tube with its larger diameter "a" facing the bottom side.

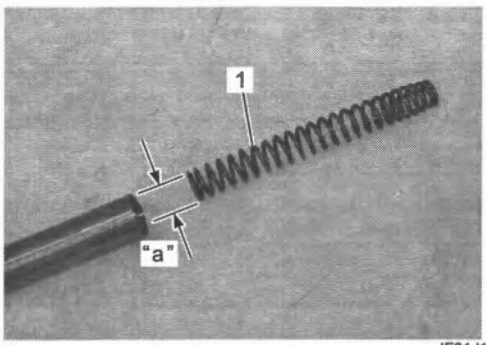

IE31J1220041-01

21) Install the adjuster rod (1).

22) Turn the lock-nut (2) until stops on the inner rod/ damper rod threads.

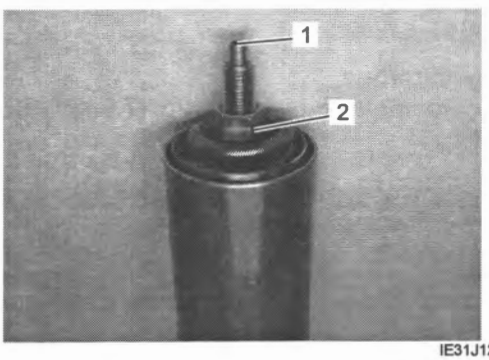

IE31J1220042-02

23) Install the spacer (1) and spring retainer (2).

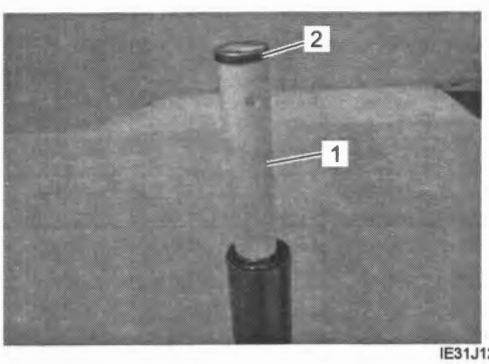

IE31J1220043-03

24) Install the special tool (A) to the holes (1) on the spacer.
25) Set the special tool (B) referring to the manual.
26) Pull up the inner rod/damper rod using the special tool (C).
27) Compress the spring using the special tool (B) and then insert the special tool (D) between the lock-nut and spring retainer.

Special tool
(A): 09940–94930
(B): 09940–93110
(C): 09940–52841
(D): 09940–94922

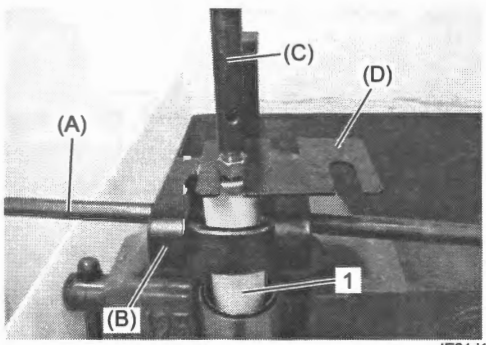

IE31J1220044-01

28) Turn the rebound damping force adjuster (1) clockwise until the first click is heard after distance "a" is obtained (stiffest position).
29) Apply fork oil to the new O-ring (2).

"A": Fork oil 99000–99044–L01 (SUZUKI FORK OIL L-01)

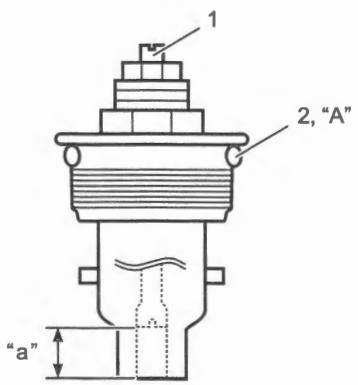

IE31J1220052-01

"a": 13 mm (0.5 in)

30) Slowly turn the front fork cap bolt (1) completely by hand until the end of the front fork cap bolt (1) seats on the inner rod end.

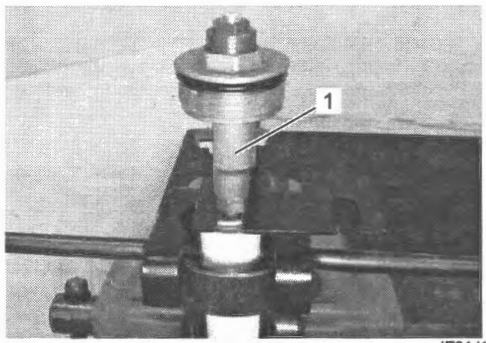

IE31J1220046-02

31) Hold the front fork cap bolt (1) and tighten the lock-nut (2) to the specified torque.

Tightening torque
Front fork inner rod lock-nut (a): 15 N·m (1.5 kgf-m, 11.0 lbf-ft)

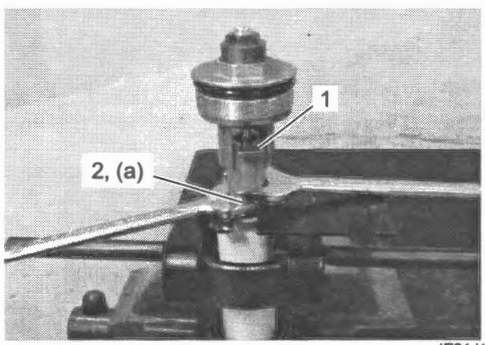

IE31J1220047-01

32) Remove the special tools.
33) Tighten the front fork cap bolt to the outer tube temporarily.
34) After installing the front fork, adjust the spring pre-load and two kinds of damping force.

Front Fork Inspection

BENL06L22206006

Refer to "Front Fork Disassembly and Reassembly" (Page 2B-4).

Inner Tube / Outer Tube

Inspect the inner tube sliding surface and outer tube sliding surface for scuffing. If any defect is found, replace the part with a new one.

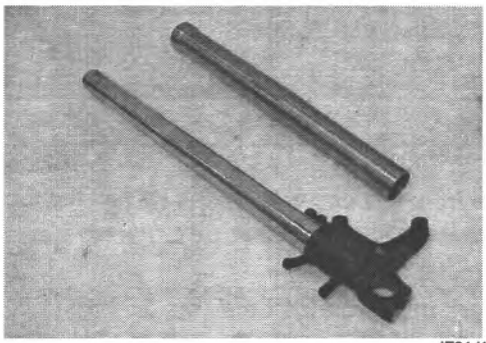

IE31J1220048-01

Fork Spring

Measure the fork spring free length "a". If it is shorter than the service limit, replace it with a new one.

Front fork spring free length
[Limit]: 321mm (12.6 in)

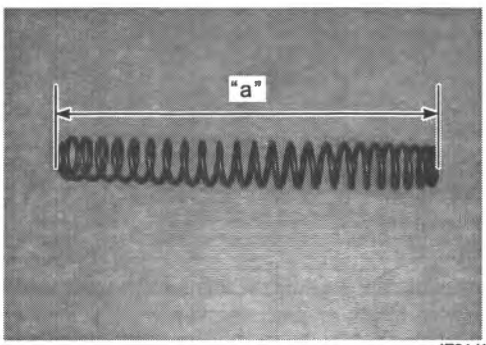

IE31J1220049-01

Inner Rod / Damper Rod

Move the inner rod by hand to examine it for smoothness.
If any defects are found, replace inner rod/damper rod with a new one.

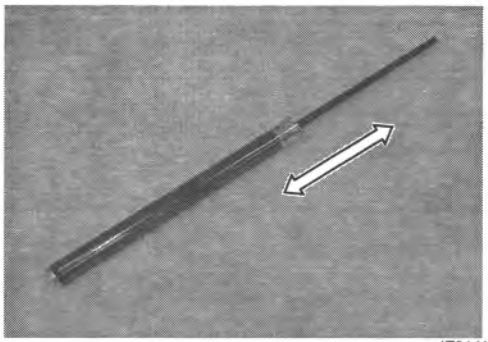

IE31J1220050-01

Outer Tube Slide Metal / Inner Tube Slide Metal

- Inspect the outer tube slide metal and inner tube slide metal for wear or damage. If any defect is found, replace the part with a new one.
- Check the Teflon coated surface for dirt. If any dirt is found, clean the surface with fork oil and nylon blush.

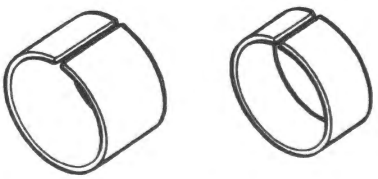

ID26J1220043-02

Specifications

Tightening Torque Specifications

BENL06L22207001

Fastening part	Tightening torque			Note
	N·m	kgf-m	lbf-ft	
Front fork cap bolt	23	2.3	17.0	☞(Page 2B-3)
Front fork lower clamp bolt	23	2.3	17.0	☞(Page 2B-4)
Front fork upper clamp bolt	23	2.3	17.0	☞(Page 2B-4)
Front fender mounting bolt	12	1.2	9.0	☞(Page 2B-4)
Inner rod/damper rod	70	7.0	51.0	☞(Page 2B-8)
Front fork inner rod lock-nut	15	1.5	11.0	☞(Page 2B-10)

Reference:
For the tightening torques of fasteners not specified in this page, refer to:
"Front Fork Components" (Page 2B-1)
"Fasteners Information" in Section 0C (Page 0C-10)

Special Tools and Equipment

Recommended Service Material

BENL06L22208001

Material	SUZUKI recommended product or Specification		Note
Fork oil	SUZUKI FORK OIL L-01	P/No.: 99000–99044–L01	☞(Page 2B-7) / ☞(Page 2B-7) / ☞(Page 2B-8) / ☞(Page 2B-10)

NOTE

Required service material(s) is also described in:
"Front Fork Components" (Page 2B-1)

Special Tool

BENL06L22208002

09940–30221 Front fork cylinder holder ☞(Page 2B-6) / ☞(Page 2B-8) 	09940–52841 Front fork inner rod holder ☞(Page 2B-8) / ☞(Page 2B-10) 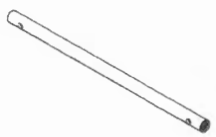
09940–52861 Front fork oil seal installer set 1. Hammer (09941-53610) 2. Attachment (09940-52870) 3. Attachment (09940-52880) ☞(Page 2B-7) 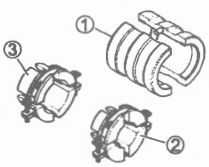	09940–54860 Front fork cylinder holder attachment ☞(Page 2B-8) 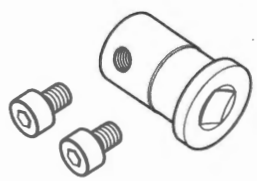
09940–93110 Fork spring compressor ☞(Page 2B-5) / ☞(Page 2B-5) / ☞(Page 2B-10) 	09940–94922 Front fork spring stopper plate This tool is included in Front fork spacer holder set (09940-94922). ☞(Page 2B-5) / ☞(Page 2B-5) / ☞(Page 2B-10) 
09940–94930 Front fork spacer holder ☞(Page 2B-5) / ☞(Page 2B-5) / ☞(Page 2B-10) 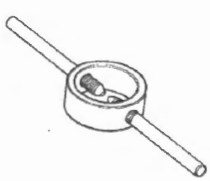	09943–74111 Front fork oil level gauge ☞(Page 2B-9) 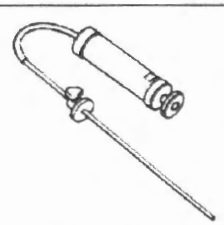

Rear Suspension

Repair Instructions

Rear Suspension Components

BENL06L22306001

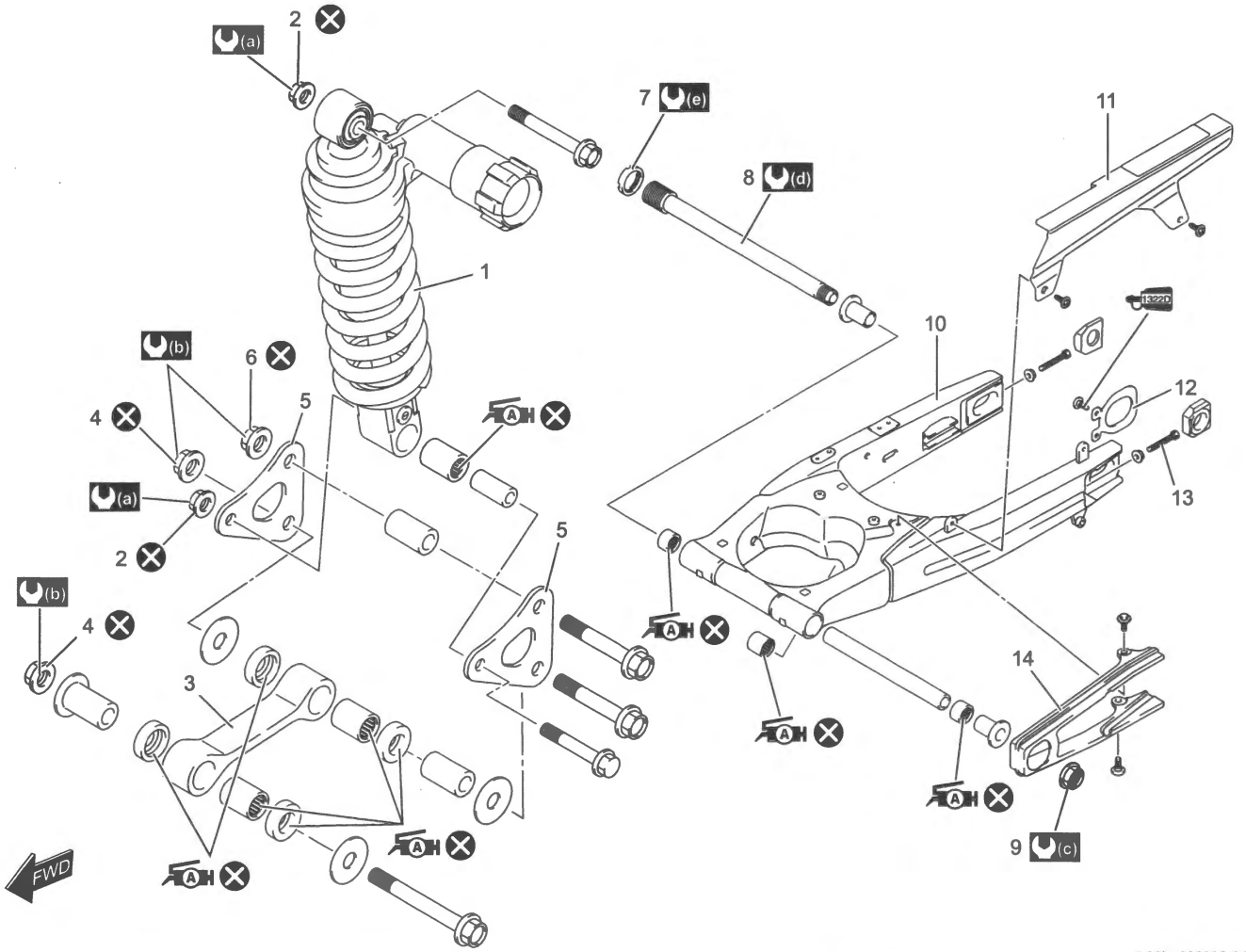

IL06L1230036-01

1. Rear shock absorber	8. Swingarm pivot shaft	(a) : 50 N·m (5.0 kgf-m, 36.5 lbf-ft)
2. Rear shock absorber mounting nut	9. Swingarm pivot nut	(b) : 98 N·m (9.8 kgf-m, 71.0 lbf-ft)
3. Cushion rod	10. Swingarm	(c) : 100 N·m (10.0 kgf-m, 72.5 lbf-ft)
4. Cushion rod mounting nut	11. Chain case	(d) : 15 N·m (1.5 kgf-m, 11.0 lbf-ft)
5. Cushion lever	12. Plate	(e) : 90 N·m (9.0 kgf-m, 65.0 lbf-ft)
6. Cushion lever mounting nut	13. Chain adjuster	A : Apply grease to the bearing.
7. Swingarm pivot lock-nut	14. Chain buffer	⊗ : Do not reuse.

Rear Suspension On-vehicle Inspection

BENL06L22306002

Inspect the rear shock absorber (1) for oil leakage and check that there is no play in the swingarm (2). Replace any defective parts, if necessary.

- Rear shock absorber replace: ☞(Page 2C-2)
- Swingarm pivot shaft and bearing inspection: ☞(Page 2C-13)
- Cushion lever inspection: ☞(Page 2C-7)
- Cushion rod inspection: ☞(Page 2C-8)
- Swingarm inspection: ☞(Page 2C-13)

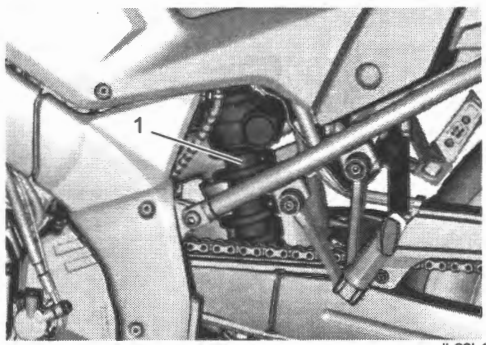

IL06L1230001-01

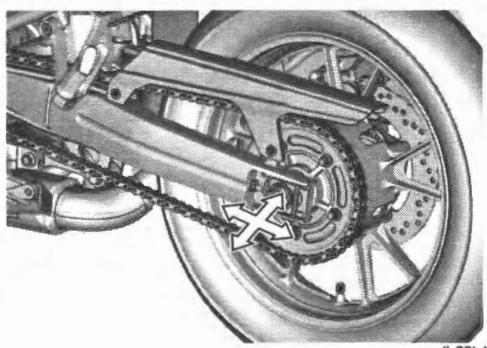

IL06L1230002-01

Rear Shock Absorber Adjustment

BENL06L22306003

Spring Pre-load Adjustment

- Fully turn the adjuster (1) counterclockwise. From that position (softest), turn it counterclockwise to standard setting position.

Rear shock absorber spring pre-load
[Standard]: 11th clicks clockwise from soft position

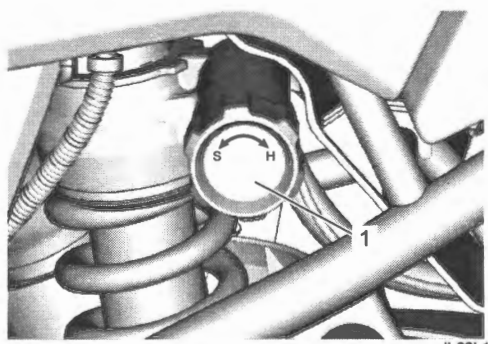

IL06L1230034-01

Damping Force Adjustment

NOTE

- **Turn the adjuster clockwise to stiffen the damping force and turn it counterclockwise to soften the damping force.**
- **Fine-tune the adjusters by turning it slightly until punch marks align.**

Fully turn the rebound damping force adjuster (1) clockwise. From full hard position, turn it out to standard setting position.

Rear shock absorber rebound damping force
[Standard]: 1.25 turns counterclockwise from full hard position

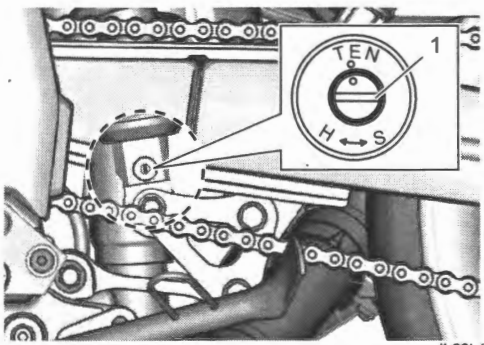

IL06L1230035-01

Rear Shock Absorber Removal and Installation

BENL06L22306004

Removal

1) Remove the frame front cover. ☞(Page 9D-30)
2) Remove the center exhaust pipe with the front exhaust pipe. ☞(Page 1K-3)
3) Support the motorcycle with a jack to relieve load on the rear shock absorber.
4) Remove the rear shock absorber lower mounting bolt and nut (1).
5) Remove the cushion rod mounting bolt and nut (2).

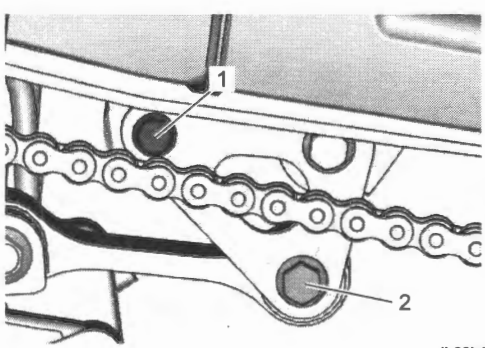

IL06L1230005-01

6) Remove the clamp (1).

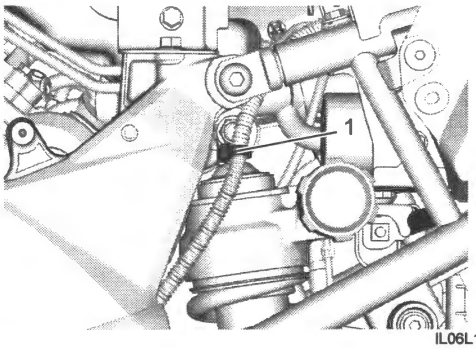

IL06L1230006-01

7) Remove the rear shock absorber upper mounting bolt and nut (1).

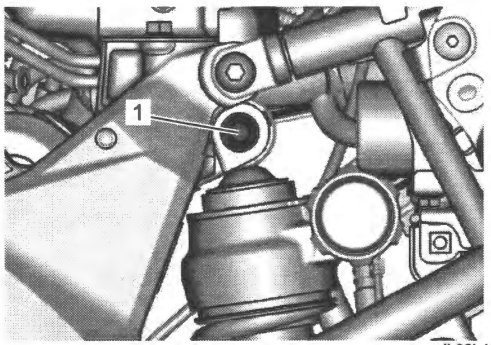

IL06L1230007-01

8) Remove the rear shock absorber (1) upward.

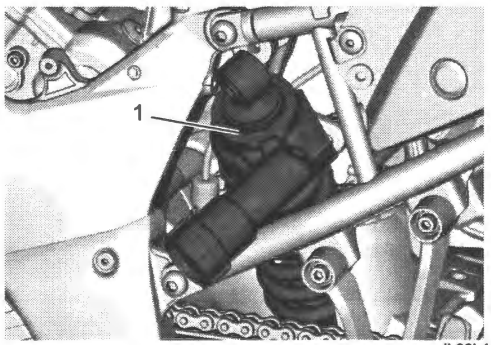

IL06L1230008-01

9) Remove the spacer (1) from the rear shock absorber.

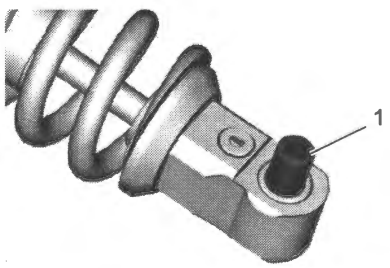

IL06L1230009-01

Installation

Install the removed parts in the reverse order of removal. Pay attention to the following points:

- Install the spacer into the rear shock absorber.
- Install the rear shock absorber.
- Insert the rear shock absorber upper/lower mounting bolts from left side, and tighten their new nuts (1) to the specified torque.

  Tightening torque
  Rear shock absorber mounting nut (a): 50 N·m (5.0 kgf-m, 36.5 lbf-ft)

- Insert the cushion rod mounting bolt from left side, and tighten the new nut (2) to the specified torque.

  Tightening torque
  Cushion rod mounting nut (b): 98 N·m (9.8 kgf-m, 65.0 lbf-ft)

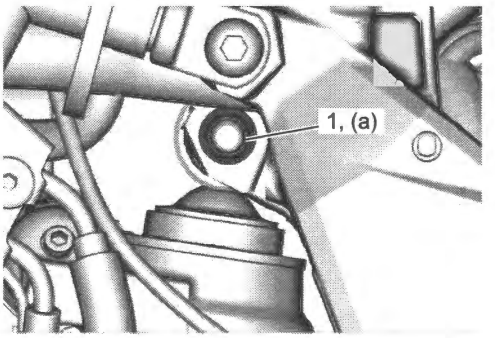

IL06L1230010-01

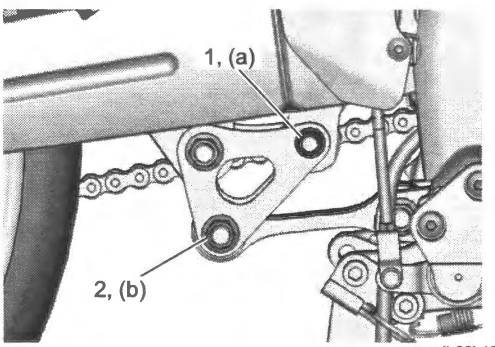

IL06L1230011-01

Rear Shock Absorber Inspection

BENL06L22306005

Refer to "Rear Shock Absorber Removal and Installation" (Page 2C-2).

Shock Absorber

Inspect the rear shock absorber for damage and oil leakage, and absorber bushing for wear and damage. If any defect is found, replace the rear shock absorber with a new one.

NOTICE

Do not attempt to disassemble the rear shock absorber. It is unserviceable.



IL06L1230012-01

Spacer

Inspect the spacer for any flaws or other damage. If any defect is found, replace the spacer with a new one.

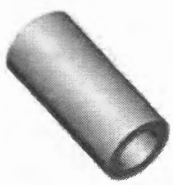

IL06L1230013-01

Rear Shock Absorber Bearing

1) Insert the spacer into bearing.
2) Check the play by moving the spacer up and down. If excessive play is noted, replace the bearing with a new one. ☞(Page 2C-4)

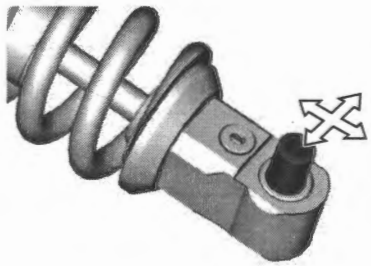

IL06L1230014-01

Rear Shock Absorber Bearing Removal and Installation

BENL06L22306006

Refer to "Rear Shock Absorber Removal and Installation" (Page 2C-2).

Removal

1) Remove the rear shock absorber bearing (1) with the special tool.

Special tool
(A): 09943–88211

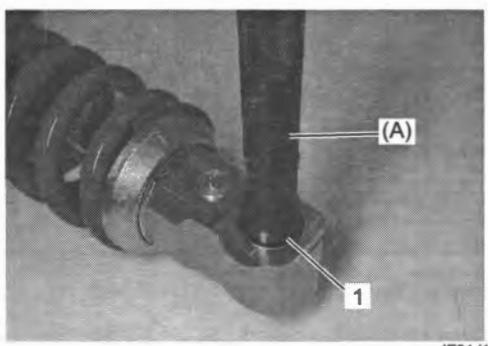

IE31J1230014-01

Installation

1) Apply a small quantity of the grease to housing when installing the bearing.

"A": Grease 99000–25011 (SUZUKI SUPER GREASE A)

2) Press the new bearing into the rear shock absorber to the depth "a" of 0.5 mm (0.02 in) from the edge with the special tool and suitable size socket wrench.

Special tool
(A): 09924–84521

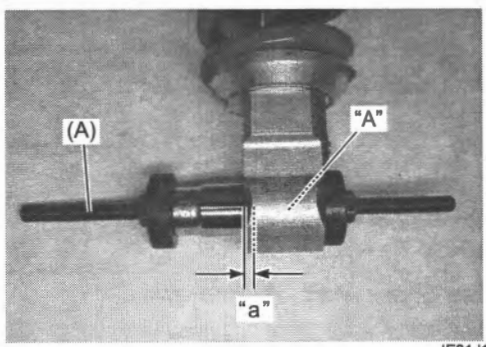

IE31J1230015-02

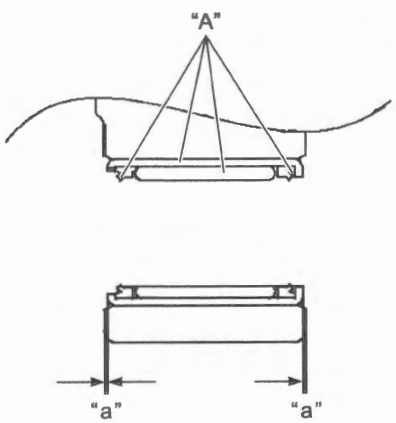

IE31J1230016-01

3) Apply grease to the bearing and dust seal.

"A": Grease 99000–25011 (SUZUKI SUPER GREASE A)

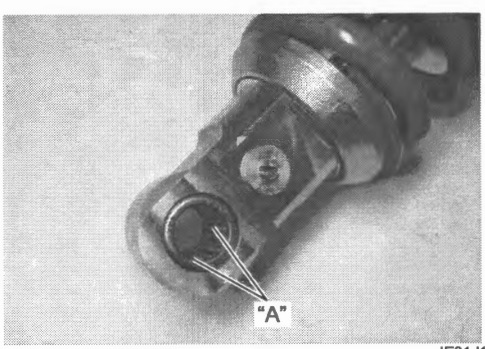

IE31J1230018-01

Rear Shock Absorber Disposal

BENL06L22306007

Refer to "Rear Shock Absorber Removal and Installation" (Page 2C-2).
The rear shock absorber unit contains high-pressure nitrogen gas.

⚠ WARNING

- **Mishandling the rear shock absorber can cause explosion.**
- **Keep away from fire and heat. High gas pressure caused by heat can cause an explosion.**
- **Never apply heat or disassemble the damper unit since it can explode or oil can splash hazardously.**
- **Release gas pressure before disposing.**

Gas Pressure Release

1) Mark the drill center at the location (1) using a center punch.

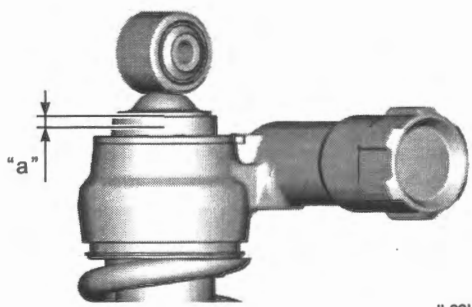

IL06L1230015-02

2) Wrap rear shock absorber (1) with a plastic bag (2) and fix it on a vise.
3) Drill a 2 – 3 mm (0.08 – 0.12 in) hole at the marked drill center using a drilling machine and let out gas while taking care not to get the plastic bag entangled with the drill bit.

⚠ WARNING

- **Be sure to wear protective glasses since drilling chips and oil may fly off with blowing gas when the drill bit has penetrated through the body.**
- **Make sure to drill at the specified position. Otherwise, pressurized oil many spout out forcefully.**

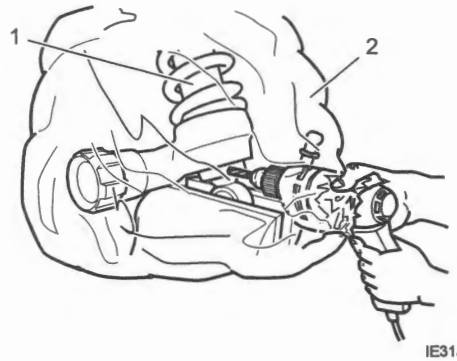

IE31J1230070-02

Cushion Lever Removal and Installation

BENL06L22306008

Removal

1) Support the motorcycle with a jack to relieve load on the cushion levers.
2) Remove the cushion lever mounting bolts and nuts (1).
3) Remove the rear shock absorber mounting bolt and nut (2).
4) Remove the cushion levers (3) and washers.

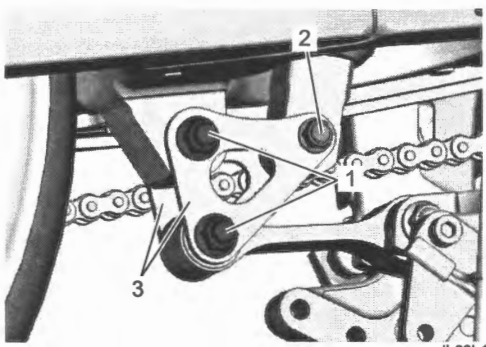

IL06L1230016-01

Installation

1) Install the washers (1) between the cushion rod and cushion levers.
2) Set the cushion levers (2) so that the arrow mark (3) points forward.
3) Insert the each mounting bolts from left side, and tighten their new nuts to the specified torque.

Tightening torque
Cushion lever mounting nut (a): 98 N·m (9.8 kgf-m, 71.0 lbf-ft)
Cushion rod mounting nut (b): 98 N·m (9.8 kgf-m, 71.0 lbf-ft)
Rear shock absorber mounting nut (c): 50 N·m (5.0 kgf-m, 36.5 lbf-ft)

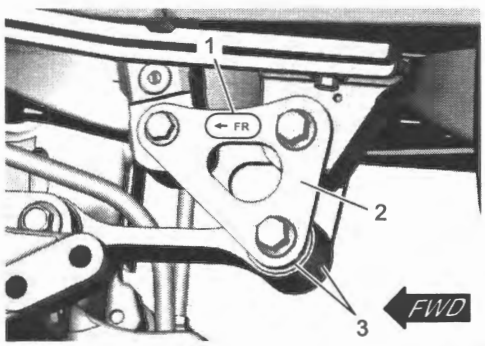

IL06L1230017-01

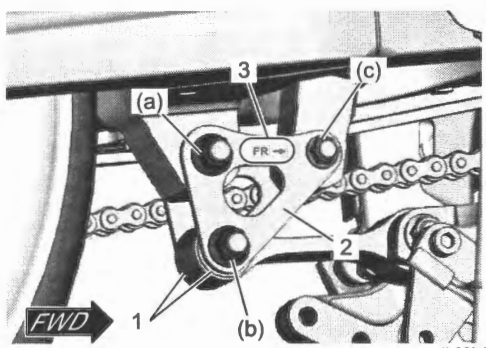

IL06L1230018-01

Cushion Lever Inspection

BENL06L22306009

Refer to "Cushion Lever Removal and Installation" (Page 2C-6).

Cushion Lever

Inspect the cushion levers for damage and bend. If any defects are found, replace the cushion levers with new ones.

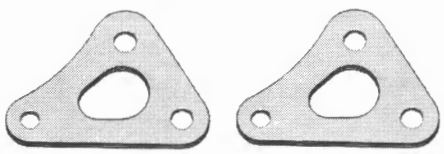

IL06L1230019-01

Cushion Rod Removal and Installation

BENL06L22306010

Removal

1) Support the motorcycle with a jack to relieve load on the cushion rod.
2) Remove the cushion lever mounting bolts and nuts (1).
3) Remove the cushion rod (1) and washer.

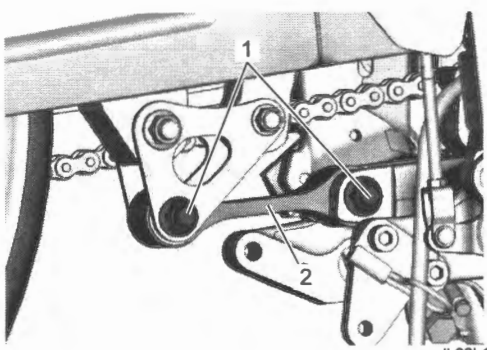

IL06L1230020-01

4) Remove the spacers (1).

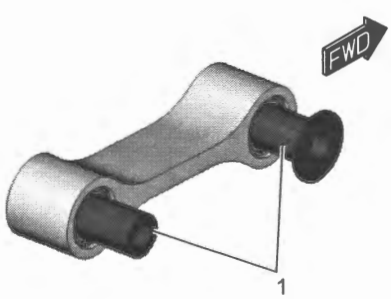

IL06L1230021-01

Installation

1) Install the spacer (1) into the cushion rod.
2) Before installing the cushion rod to the frame, insert the spacer (2) into the bearing from the right side.

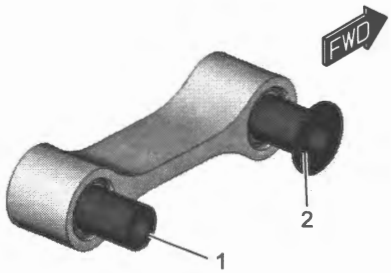

IL06L1230022-01

3) Install the washers (1) between cushion rod and cushion levers.
4) Install the washer (1) between the cushion rod left side and frame.
5) Insert the cushion rod mounting bolts from left side, and tighten their new nuts (2) to the specified torque.

Tightening torque
Cushion rod mounting nut (a): 98 N·m (9.8 kgf-m, 71.0 lbf-ft)

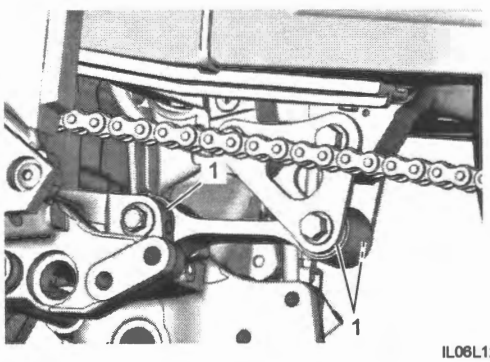

IL06L1230023-01

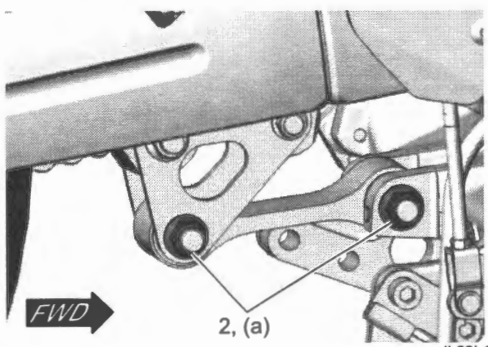

IL06L1230024-01

Cushion Rod Inspection

BENL06L22306011

Refer to "Cushion Rod Removal and Installation" (Page 2C-7).

Spacer

Inspect the spacers for any flaws or other damage. If any defects are found, replace it with a new one.

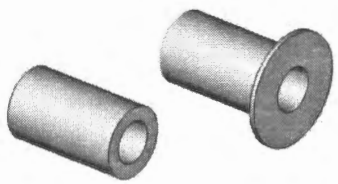

IL06L1230025-01

Cushion Rod Bearing

1) Insert the spacers into bearings.
2) Check the play by moving the spacers up and down. If excessive play is noted, replace the bearing with a new one. ☞(Page 2C-8)

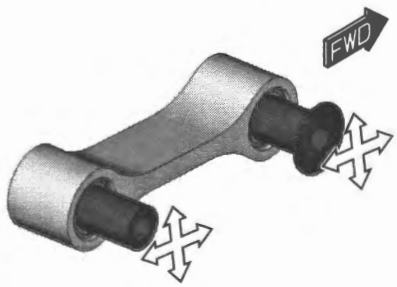

IL06L1230026-01

Cushion Rod

Inspect the cushion rod for damage. If any defect is found, replace the cushion rod with a new one.

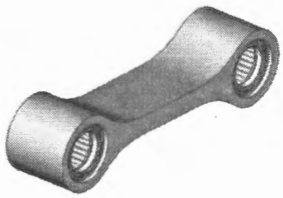

IL06L1230027-01

Cushion Rod Bearing / Dust Seal Removal and Installation

BENL06L22306012

Refer to "Cushion Rod Removal and Installation" (Page 2C-7).

Removal

1) Remove the dust seals (1) with the special tool.

Special tool
(A): 09913–50121

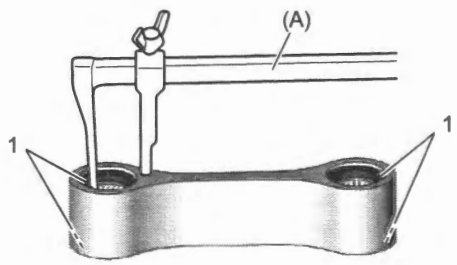

IL06L1230028-01

2) Remove the cushion rod bearings (1) with the special tool.

Special tool
(A): 09921–20240

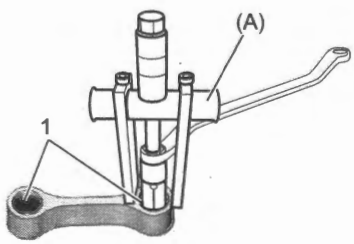

IL06L1230029-01

Installation

1) Apply a small quantity of the grease to housing.

   "A": Grease 99000–25011 (SUZUKI SUPER GREASE A)

2) Press the new bearings (1) into the cushion rod (2) to the depth "a" of 1.5 mm (0.059 in) from the edge with the special tool and suitable size socket wrench.

   Special tool
   (A): 09924–84521

3) Install the new dust seals (3) in correct direction as shown in the illustration with the special tool.

   Special tool
   (A): 09913–70210

4) Apply grease to the bearings and dust seals.

   "A": Grease 99000–25011 (SUZUKI SUPER GREASE A)

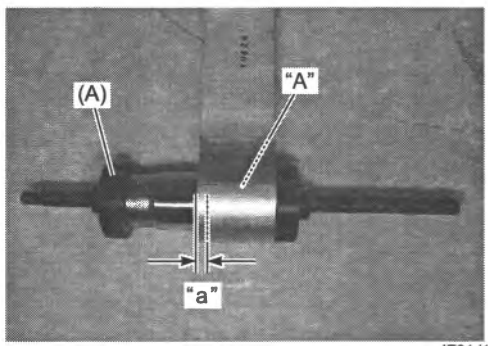

IE31J1230033-01

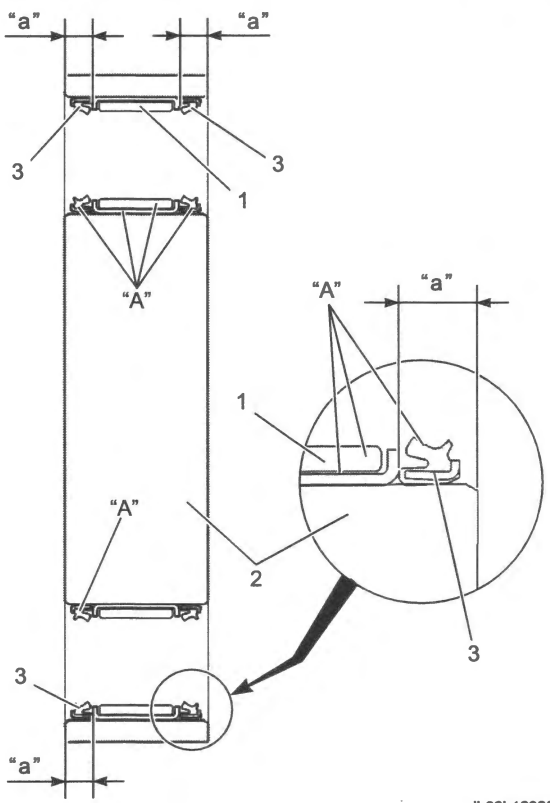

IL06L1230030-02

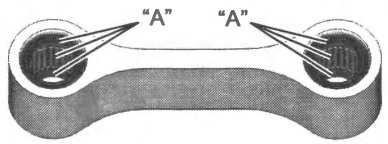

IL06L1230031-01

Swingarm Removal and Installation

BENL06L22306013

Removal

1) Remove the front exhaust pipe with the center exhaust pipe. ☞(Page 1K-3)
2) Remove the rear wheel assembly. ☞(Page 2D-12)
3) Disconnect the rear brake hose and remove the rear wheel speed sensor lead wire from the brake hose guide (1).
4) Remove the brake hose guide (2).

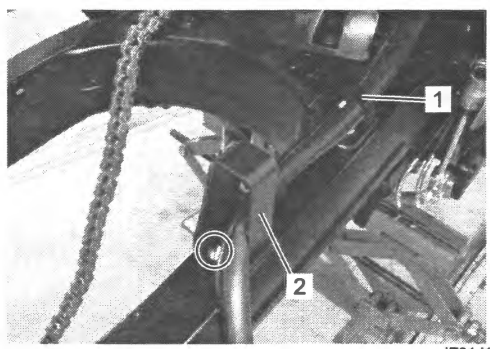

IE31J1230036-01

5) Remove the rear shock absorber (1). ☞(Page 2C-2)
6) Remove the cushion lever mounting bolt and nut (2).
7) Loosen the cushion rod (rear) mounting nut (3).

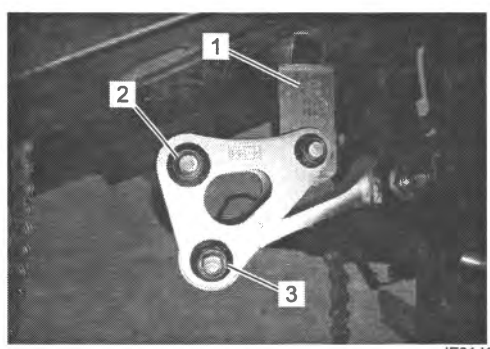

IE31J1230037-01

8) Remove the left and right pivot covers (1).

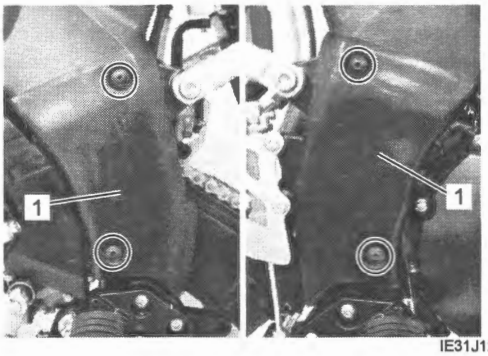

IE31J1230038-01

9) Remove the swingarm pivot shaft lock-nut (1) with the special tool.

Special tool
(A): 09940–14940

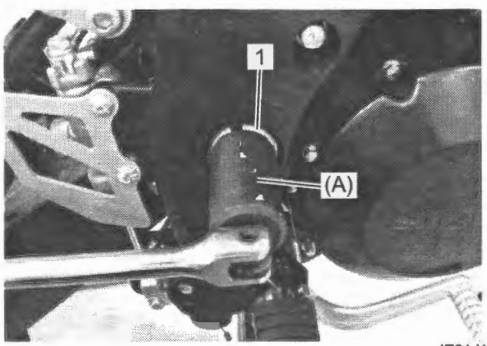

IE31J1230039-01

10) Hold the swingarm pivot shaft (1) with the special tool and remove the swingarm pivot nut (2).

Special tool
(A): 09944–28321

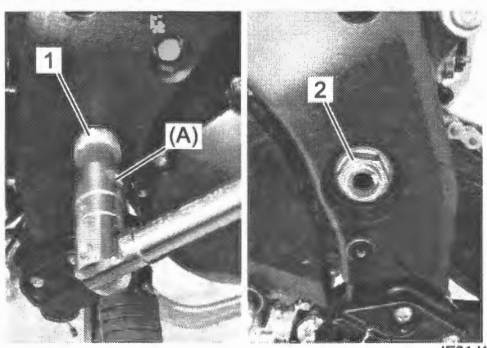

IE31J1230040-01

11) Remove the swingarm assembly by removing the swingarm pivot shaft (1) with the special tool.

Special tool
(A): 09944–28321

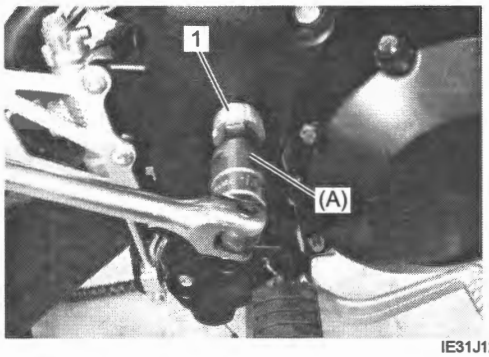

IE31J1230041-01

12) Remove the mud guard (1), chain case (2) and guide (3) from the swingarm.

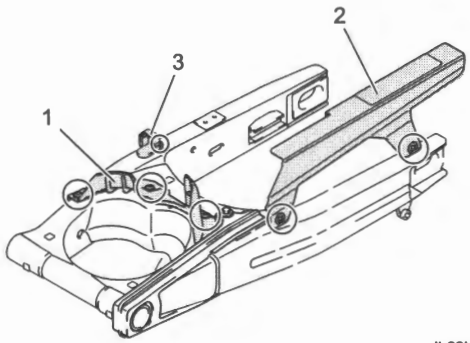

IL06L1230038-01

13) Remove the chain buffer (1).

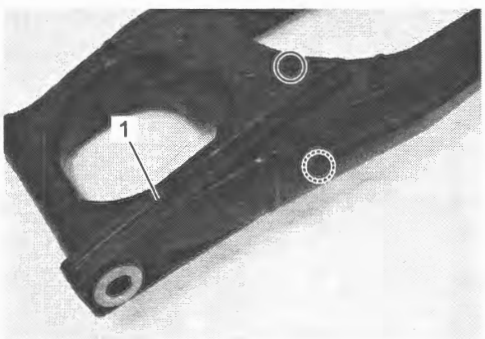

IE31J1230044-01

14) Remove the spacers (1) from the swingarm.

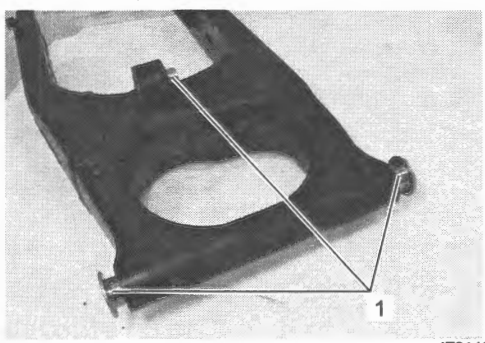

IE31J1230043-01

15) Remove the plate (1).

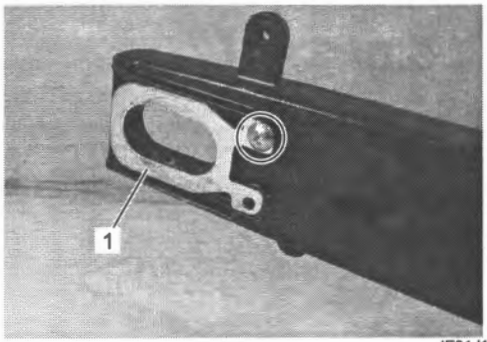

IE31J1230045-01

16) Remove the left and right drive chain adjuster bolts and nuts (1).

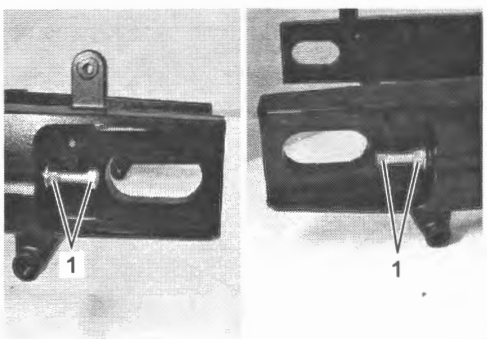

IE31J1230046-01

Installation

1) Install the drive chain adjuster bolts and nuts to the swingarm.
2) When installing the plate (1), apply thread lock to the screw.

"A": Thread lock cement 99000–32150 (THREAD LOCK CEMENT 1322D)

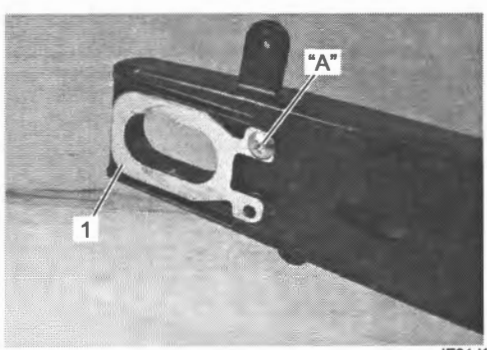

IE31J1230047-01

3) Install the spacers into the swingarm.
4) Install the chain buffer (1), chain case (2) and mud guard (3) to the swingarm.
5) Tighten the new mud guard bolts (4) to the specified torque.

Tightening torque
Mud guard bolt (a): 4.5 N·m (0.45 kgf-m, 3.5 lbf-ft)

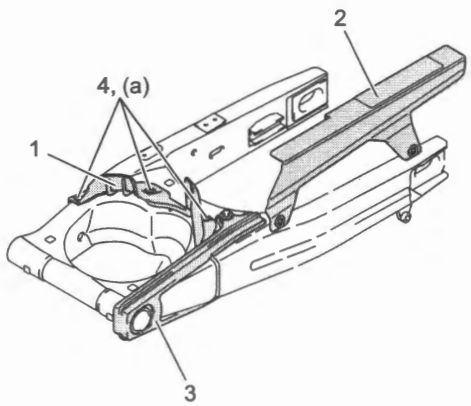

IL06L1230039-01

6) Install the washer (2) and insert the stopper of the brake hose guide (1) into the hole of the swingarm fully, before tighten the screw (3).

Tightening torque
Brake hose guide screw (a): 5 N·m (0.5 kgf-m, 4.0 lbf-ft)

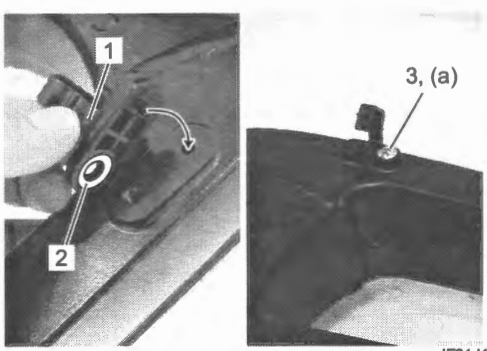

IF31J1230001-01

7) When installing the swingarm assembly (1), pass the chain (2) to the swingarm.

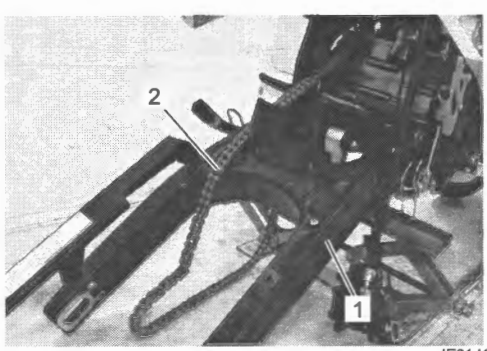

IE31J1230050-01

8) Insert the swingarm pivot shaft (1) and tighten it to the specified torque.

Special tool
(A): 09944–28321

Tightening torque
Swingarm pivot shaft (a): 15 N·m (1.5 kgf-m, 11.0 lbf-ft)

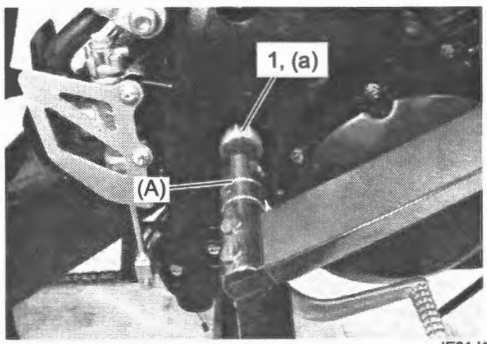

IE31J1230051-01

9) Hold the swingarm pivot shaft (1) with the special tool and tighten the new swingarm pivot nut (2) to the specified torque.

Special tool
(A): 09944–28321

Tightening torque
Swingarm pivot nut (a): 100 N·m (10.0 kgf-m, 72.5 lbf-ft)

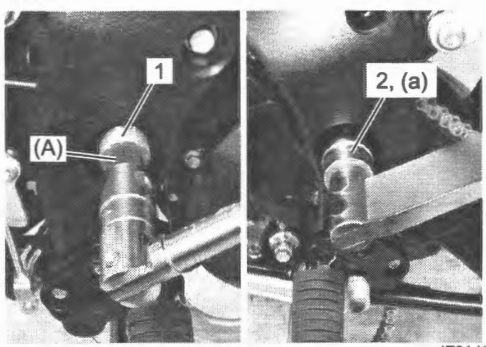

IE31J1230052-01

10) Tighten the swingarm pivot lock-nut (1) to the specified torque with the special tool.

Special tool
(A): 09940–14940

Tightening torque
Swingarm pivot lock-nut (a): 90 N·m (9.0 kgf-m, 65.0 lbf-ft)

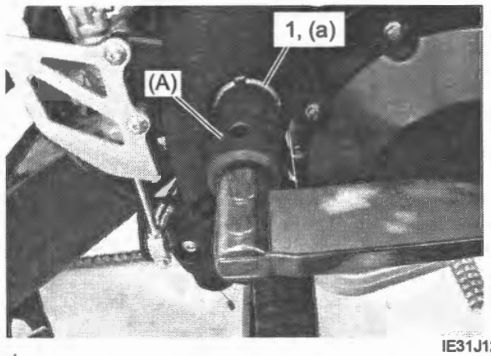

IE31J1230053-01

11) Install the pivot covers.
12) Tighten the cushion rod (rear) mounting nut and cushion lever mounting nut. Refer to "Cushion Lever Removal and Installation" (Page 2C-6).
13) Install the rear shock absorber. ☞(Page 2C-2)
14) Connect the rear wheel speed sensor lead wire and rear brake hose into the brake hose guide (1). Refer to "Rear Brake Hose Routing Diagram" in Section 4A (Page 4A-7) and "Rear Wheel Speed Sensor Routing Diagram" in Section 4E (Page 4E-9).
15) Install the washer (4) and insert the stopper of the brake hose guide (2) into the hole of the swingarm fully, before tightening the screw (3).

Tightening torque
Brake hose guide screw (a): 3.5 N·m (0.36 kgf-m, 2.60 lbf-ft)

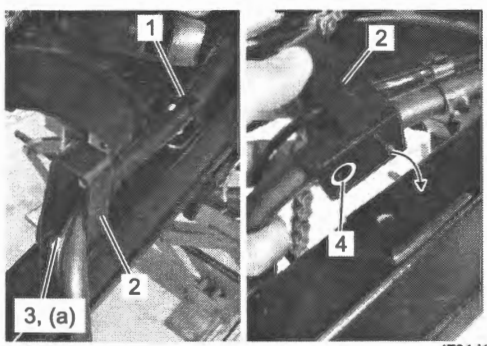

IF31J1230002-01

16) Install the rear wheel assembly. ☞(Page 2D-12)
17) Install the front exhaust pipe with the center exhaust pipe. ☞(Page 1K-5)

Swingarm Inspection

BENL06L22306014

Refer to "Swingarm Removal and Installation" (Page 2C-9).

Spacers

Inspect the spacers for wear and damage. If any defects are found, replace the spacers with new ones.

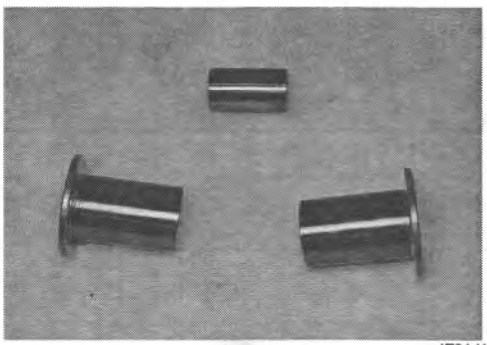

IE31J1230055-01

Chain Buffer

Inspect the chain buffer for wear and damage. If any defect is found, replace the chain buffer with a new one.

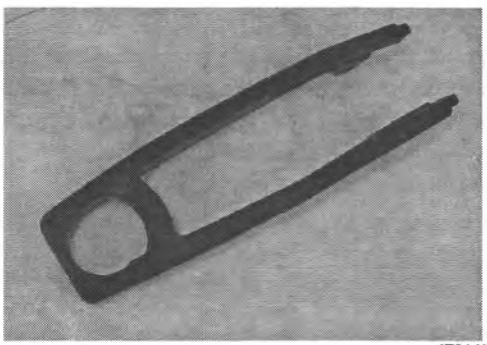

IE31J1230056-01

Plate

Inspect the plate for damage and excessive bend. If any defect is found, replace the plate with a new one.

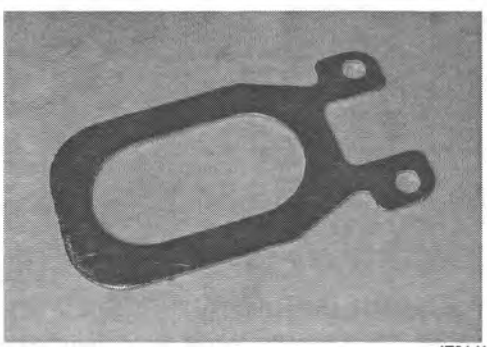

IE31J1230057-01

Swingarm Bearing

1) Insert the spacers into bearings.
2) Check the play by moving the spacers up and down. If excessive play is noted, replace the bearings with new ones. ☞(Page 2C-14)

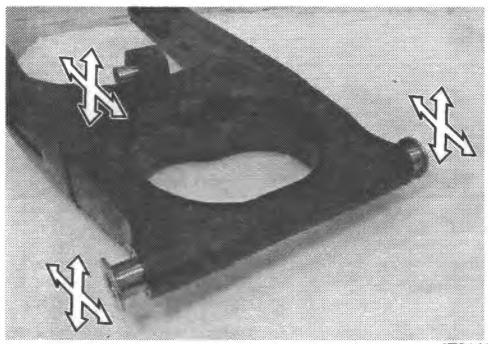

IE31J1230058-01

Swingarm

Inspect the swingarm for damage. If any defect is found, replace the swingarm with a new one.



IE31J1230059-01

Swingarm Pivot Shaft

Using a dial gauge, check the swingarm pivot shaft runout. If the runout exceeds the service limit, replace the pivot shaft.
Actual runout is 1/2 of the total indicator reading.

Special tool
(A): 09900–20607
(B): 09900–20701
(C): 09900–21304

Swingarm pivot shaft runout
[Limit]: 0.3 mm (0.01 in)

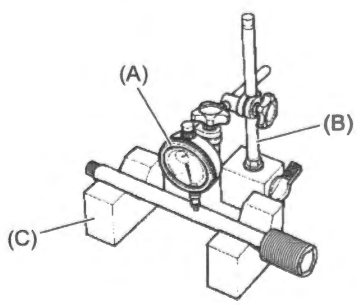

IE31J1230060-01

Swingarm Bearing Removal and Installation

BENL06L22306015

Refer to "Swingarm Removal and Installation" (Page 2C-9).

Refer to "Rear Suspension Components" (Page 2C-1).

Removal

1) Remove the swingarm pivot bearings (1) on both sides using the special tool.

Special tool
(A): 09921–20240

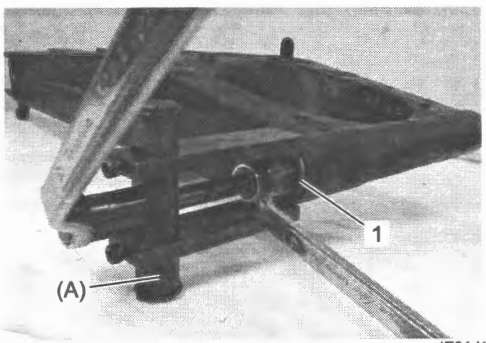

IE31J1230061-01

2) Remove the center spacer (1).

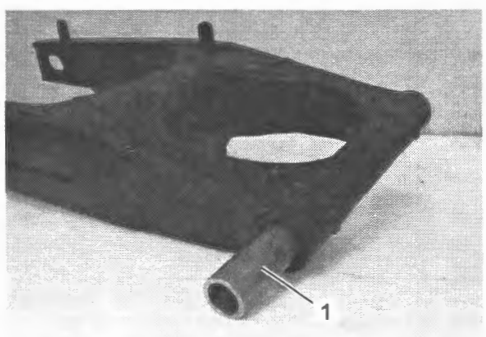

IE31J1230062-01

3) Remove the cushion lever bearing (1) using the special tool.

Special tool
(A): 09921–20240

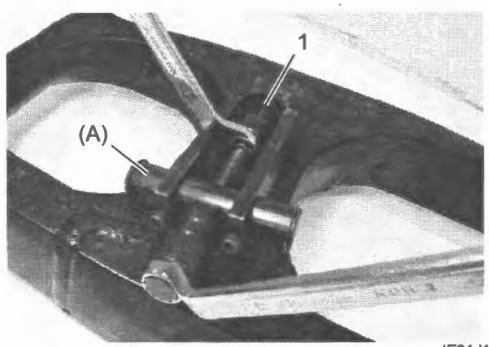

IE31J1230063-01

Installation

1) Apply a small quantity of the grease to housing when installing the bearing.
2) Press the new cushion lever bearing into the swingarm to the depth "a" of 1.5 mm (0.06 in) from the edge with the special tool and suitable size socket wrench.

"A": Grease 99000–25011 (SUZUKI SUPER GREASE A)

Special tool
(A): 09924–84521

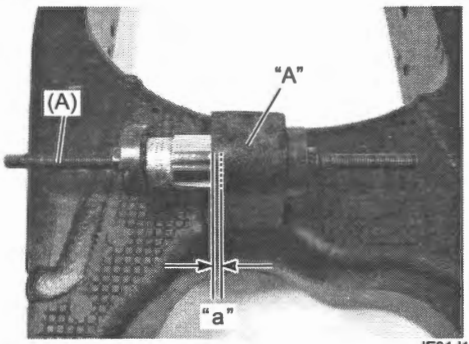

IE31J1230064-02

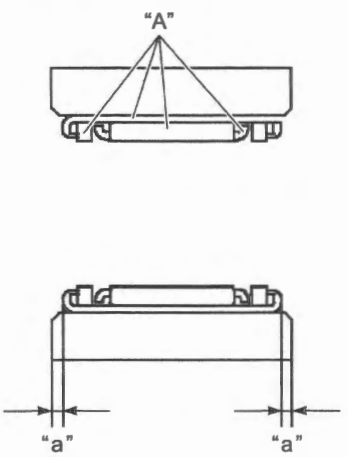

IE31J1230065-01

3) Install the center spacer.
4) Apply a small quantity of the grease to housing, when installing the bearing.

"A": Grease 99000–25011 (SUZUKI SUPER GREASE A)

5) Press the new pivot bearings (1) into the swingarm (2) with the special tool.
6) Set the bearing end (3) to the area "a" as shown in the figure.

Special tool
(A): 09913–70210
(B): 09941–34513

NOTE

The stamped mark side of the pivot bearing faces outside.

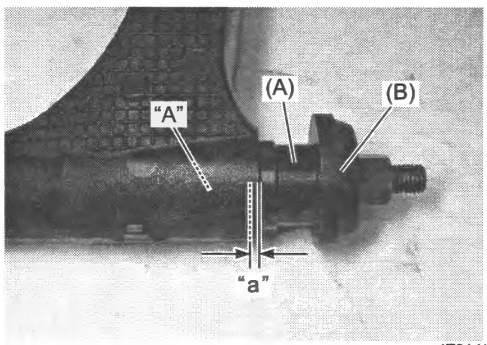

IE31J1230066-01

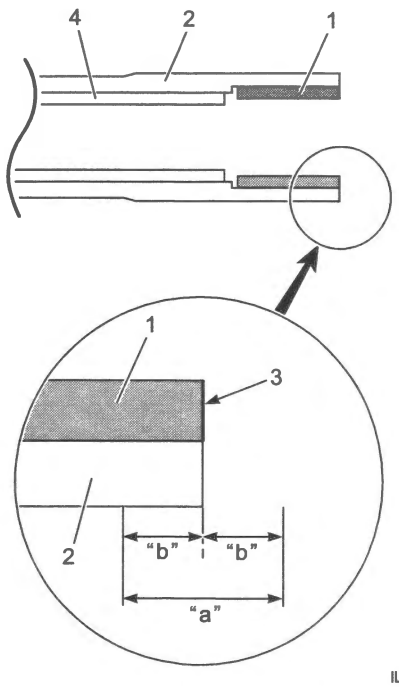

IL06L1230033-01

"b": 0.2 mm (0.0079 in)
4. Center spacer

7) Apply grease to the bearings.

"A": Grease 99000–25011 (SUZUKI SUPER GREASE A)

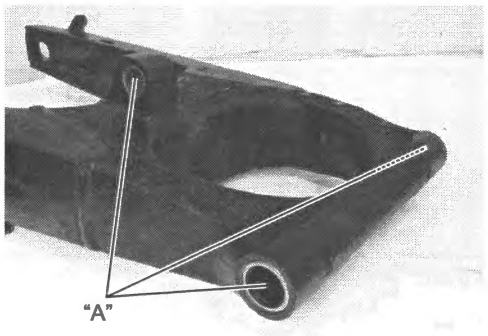

IE31J1230068-01

Specifications

Tightening Torque Specifications

BENL06L22307001

Fastening part	Tightening torque			Note
	N·m	kgf-m	lbf-ft	
Rear shock absorber mounting nut	50	5.0	36.5	☞(Page 2C-3) / ☞(Page 2C-6)
Cushion rod mounting nut	98	9.8	65.0	☞(Page 2C-3)
Cushion lever mounting nut	98	9.8	71.0	☞(Page 2C-6)
Cushion rod mounting nut	98	9.8	71.0	☞(Page 2C-6) / ☞(Page 2C-7)
Mud guard bolt	4.5	0.45	3.5	☞(Page 2C-11)
Brake hose guide screw	5	0.5	4.0	☞(Page 2C-11)
Swingarm pivot shaft	15	1.5	11.0	☞(Page 2C-12)
Swingarm pivot nut	100	10.0	72.5	☞(Page 2C-12)
Swingarm pivot lock-nut	90	9.0	65.0	☞(Page 2C-12)
Brake hose guide screw	3.5	0.36	2.60	☞(Page 2C-12)

Reference:
For the tightening torques of fasteners not specified in this page, refer to:
"Rear Suspension Components" (Page 2C-1)
"Fasteners Information" in Section 0C (Page 0C-10)

Special Tools and Equipment

Recommended Service Material

BENL06L22308001

Material	SUZUKI recommended product or Specification		Note
Grease	SUZUKI SUPER GREASE A	P/No.: 99000–25011	☞(Page 2C-5) / ☞(Page 2C-5) / ☞(Page 2C-9) / ☞(Page 2C-9) / ☞(Page 2C-14) / ☞(Page 2C-15) / ☞(Page 2C-15)
Thread lock cement	THREAD LOCK CEMENT 1322D	P/No.: 99000–32150	☞(Page 2C-11)

NOTE

Required service material(s) is also described in:
"Rear Suspension Components" (Page 2C-1)

Special Tool

BENL06L22308002

09900–20607
Dial gauge (10 x 0.01 mm)
☞(Page 2C-13)

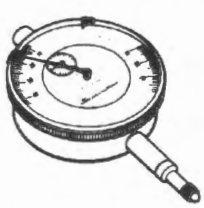

09900–20701
Dial gauge chuck
☞(Page 2C-13)

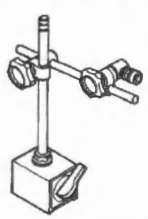

09900–21304
V blocks
☞(Page 2C-13)

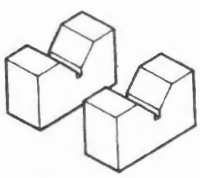

09913–50121
Oil seal remover
☞(Page 2C-8)



09913–70210 Bearing installer set ☞(Page 2C-9) / ☞(Page 2C-15) 	09921–20240 Bearing remover set ☞(Page 2C-8) / ☞(Page 2C-14) / ☞(Page 2C-14) 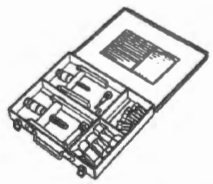
09924–84521 Bearing installer set ☞(Page 2C-5) / ☞(Page 2C-9) / ☞(Page 2C-14) 	09940–14940 Swingarm pivot adjuster wrench ☞(Page 2C-10) / ☞(Page 2C-12) 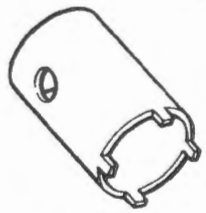
09941–34513 Bearing installer set ☞(Page 2C-15) 	09943–88211 Pinion bearing installer ☞(Page 2C-4) 
09944–28321 Hexagon bit socket (19 mm : 1/2 sq.) ☞(Page 2C-10) / ☞(Page 2C-10) / ☞(Page 2C-12) / ☞(Page 2C-12) 	

Wheels and Tires

Precautions

Precautions for Wheel and Tire

BENL06L22400001

Refer to "General Precautions" in Section 00 (Page 00-1).

⚠ WARNING

- **Replace the wheel when wheel runout exceed the service limit or if find damage such as distortion, crack, nick or scratch.**
- **When tire replacement is necessary, the original equipment type tire should be used.**

Repair Instructions

Front Wheel Components

BENL06L22406001

DL1050RQ

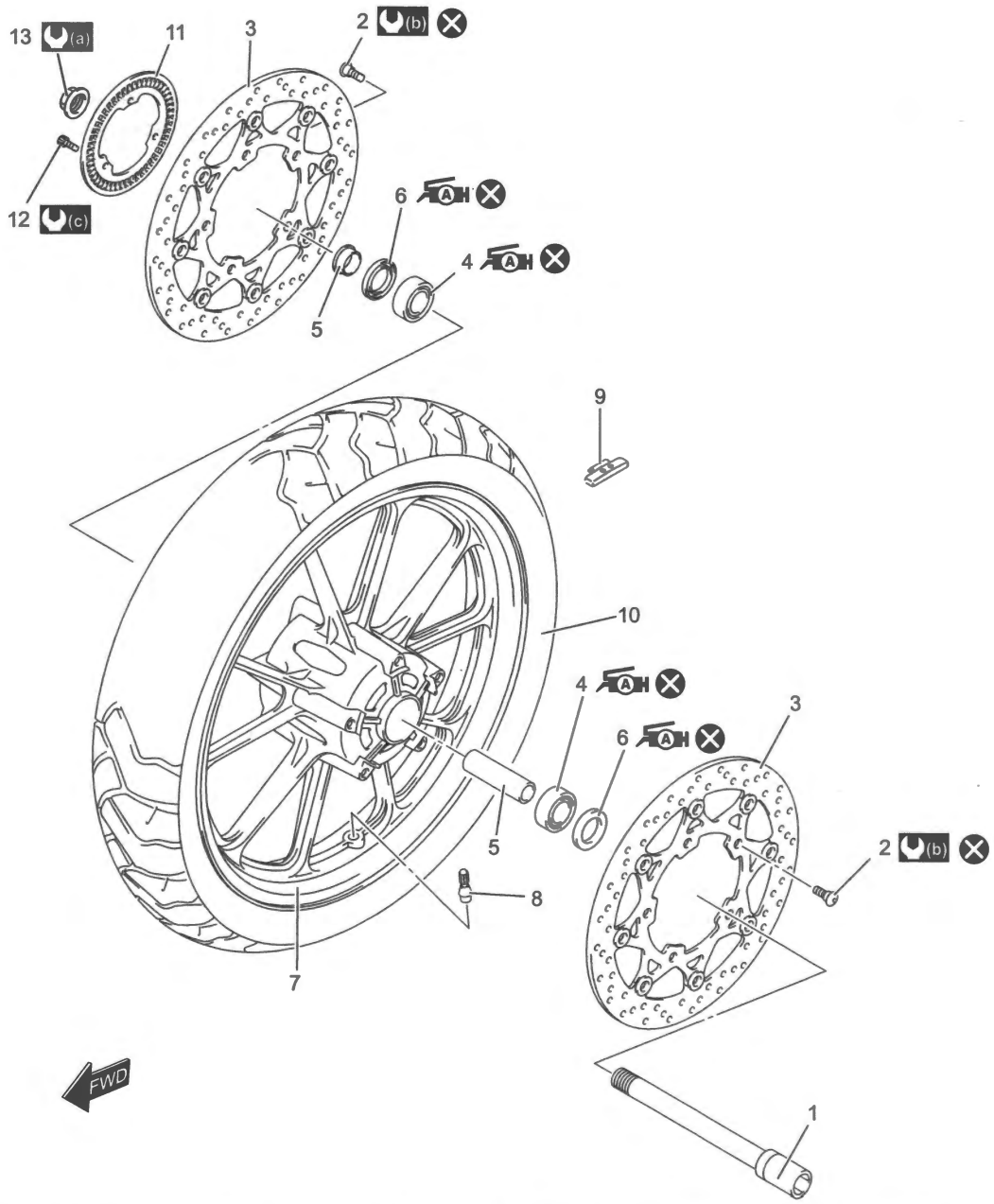

IL06L1240001-02

1. Front axle	6. Dust seal	11. Front wheel speed sensor rotor	(c) : 6.5 N·m (0.65 kgf-m, 5.0 lbf-ft)
2. Brake disc bolt	7. Front wheel	12. Wheel speed sensor rotor bolt	: Apply grease.
3. Brake disc	8. Air valve	13. Front axle nut	: Do not reuse.
4. Bearing	9. Wheel balancer	(a) : 100 N·m (10.0 kgf-m, 72.5 lbf-ft)	
5. Spacer	10. Front tire	(b) : 23 N·m (2.3 kgf-m, 17.0 lbf-ft)	

DL1050RC

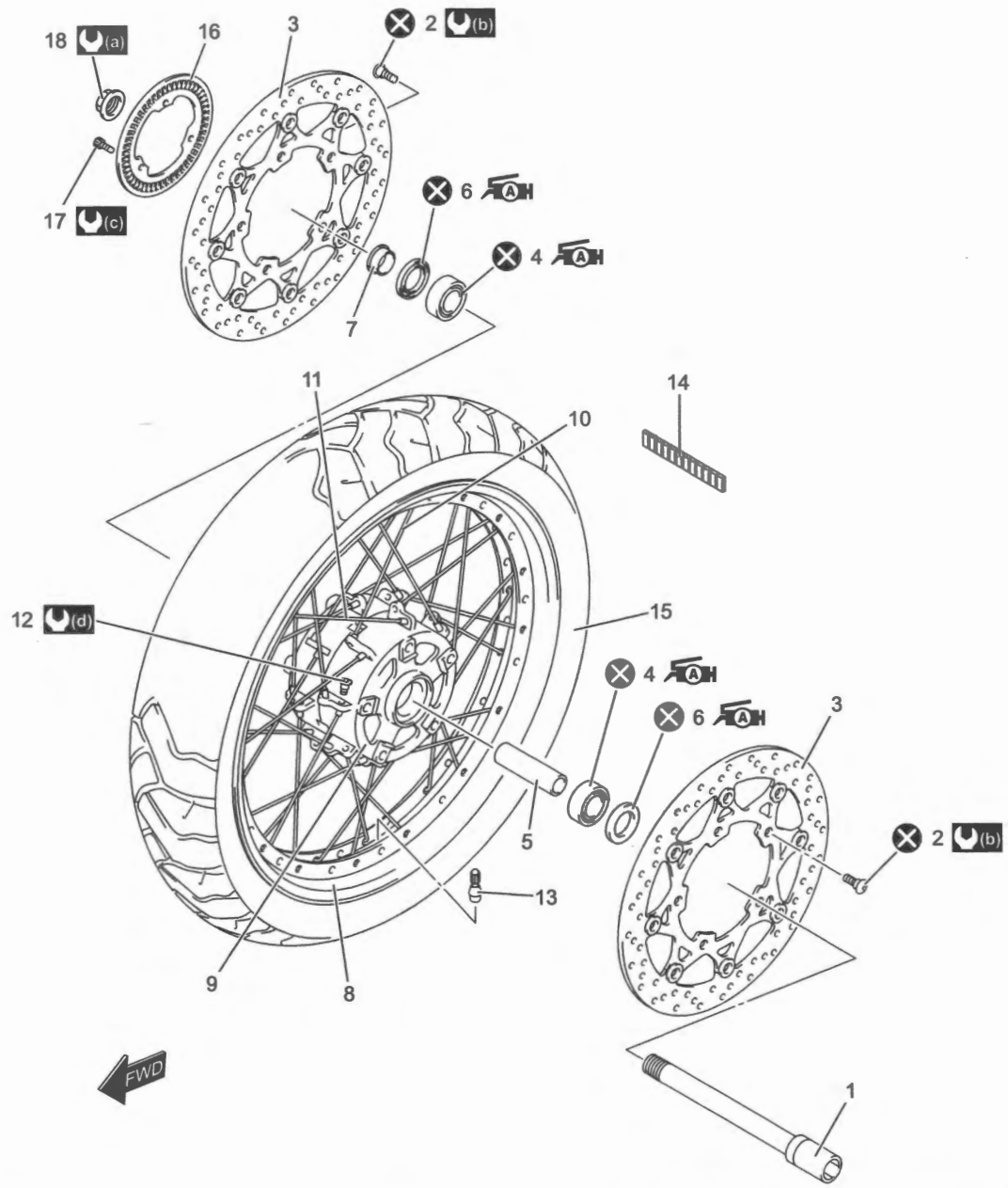

IL06L1240002-02

1. Front axle	9. Front wheel hub	17. Wheel speed sensor rotor bolt
2. Brake disc bolt	10. Front inner spoke	18. Front axle nut
3. Brake disc	11. Front outer spoke	(a) : 100 N·m (10.0 kgf-m, 72.5 lbf-ft)
4. Bearing	12. Spoke nipple	(b) : 23 N·m (2.3 kgf-m, 17.0 lbf-ft)
5. Spacer	13. Air valve	(c) : 6.5 N·m (0.65 kgf-m, 5.0 lbf-ft)
6. Dust seal	14. Balancer weight	(d) : 5 N·m (0.5 kgf-m, 4.0 lbf-ft)
7. Collar	15. Front tire	: Apply grease.
8. Front wheel rim	16. Front wheel speed sensor rotor	: Do not reuse.

Front Wheel Assembly Construction (DL1050RC)

BENL06L22406002

NOTE

DL1050RC differs from DL1050RQ in the wheel shape and installation of the balancer weight.

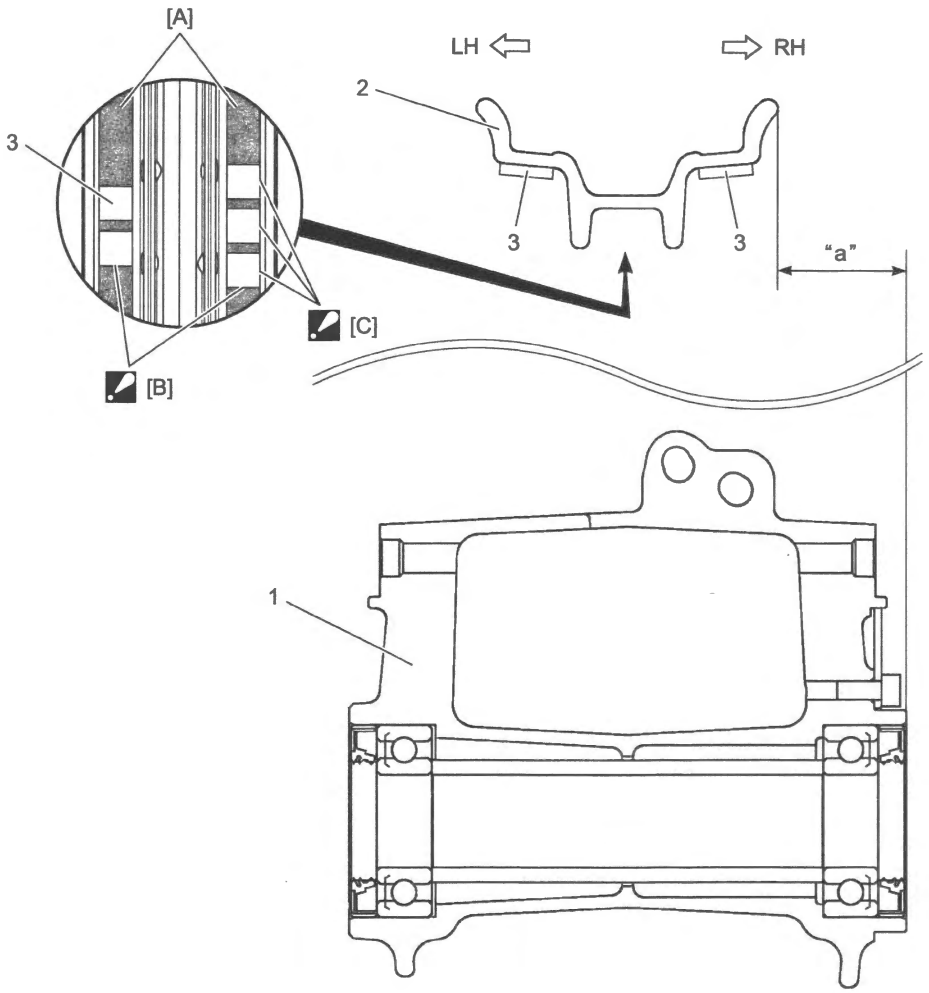

IL06L1240003-01

[A]: Wheel rim flat surface	1. Front wheel hub	"a": 34.9 – 35.8 mm (1.37 – 1.41 in)
[B]: Asymmetric positioning of the balancer weights is allowed.	2. Front wheel rim	
[C]: When sticking a number of weights, a little opening between the adjoining weights is allowed. However, overlapping is prohibited.	3. Balancer weight	

Front Wheel Spoke Construction (DL1050RC)

BENL06L22406003

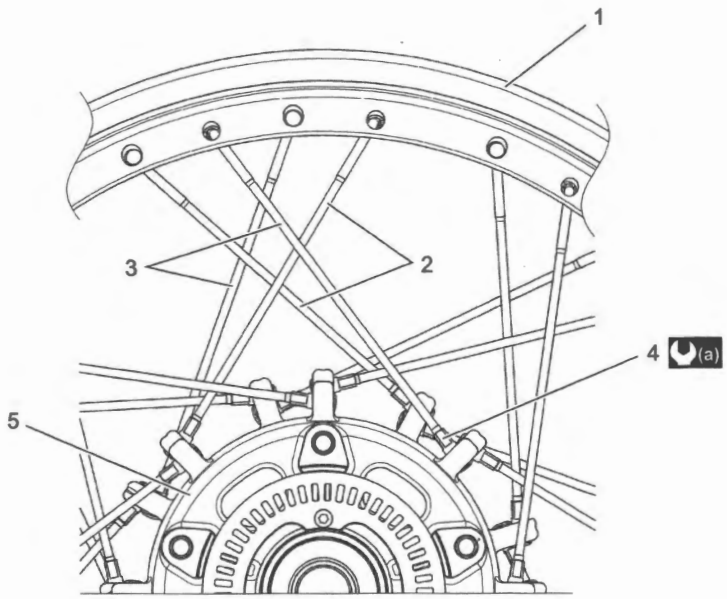

IJ31J1240002-02

1. Front wheel rim	3. Front outer spoke	5. Front wheel hub
2. Front inner spoke	4. Spoke nipple	(a): 5 N·m (0.5 kgf-m, 4.0 lbf-ft)

Front Wheel Assembly Removal and Installation

BENL06L22406004

Removal

1) Remove the front wheel speed sensor mounting bolt. ☞(Page 4E-56)
2) Remove the front brake calipers on the front fork legs. ☞(Page 4B-3)
3) Remove the front axle nut (1).
4) Loosen the two axle pinch bolts (2) on the right front fork leg.

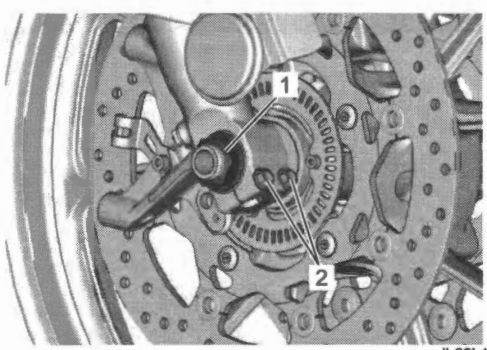

IL06L1240004-01

5) Raise the front wheel off the ground and support the motorcycle with a jack or a wooden block.
6) Loosen two axle pinch bolts (1) on the left front fork leg.
7) Draw out the front axle (2) and remove the front wheel.

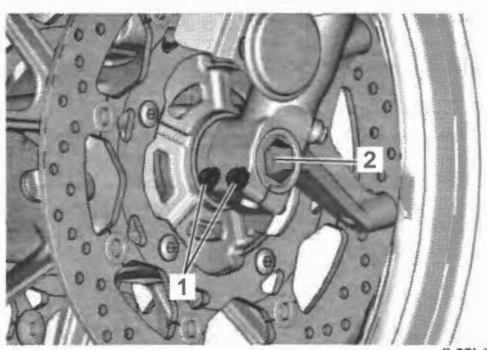

IL06L1240005-01

8) Remove the spacer (1).

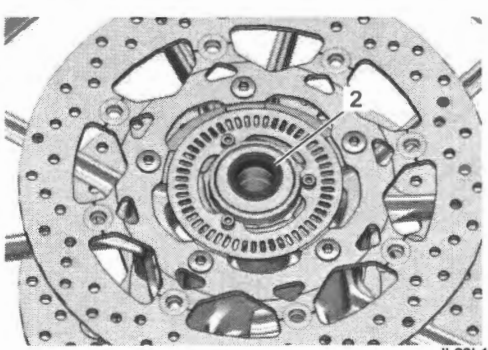

IL06L1240006-01

Installation

1) Install the collar (1) into the right side of the wheel.

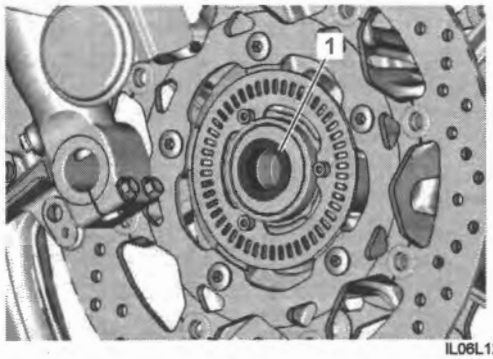

IL06L1240049-01

2) Install the front wheel inserting the front axle from left side, and tighten the front axle nut temporarily.

⚠ WARNING

The directional arrow on the tire should point to the wheel rotation, when installing the wheel.

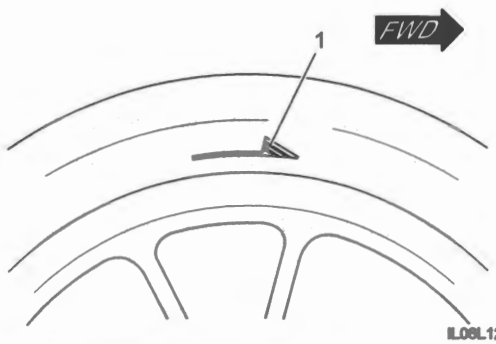

IL06L1240009-03

3) Remove a jack or a wooden block.

4) Hold the front axle with the special tool and tighten the front axle nut (1) to the specified torque.

Special tool
(A): 09900–18740

Tightening torque
Front axle nut (a): 100 N·m (10.0 kgf-m, 72.5 lbf-ft)

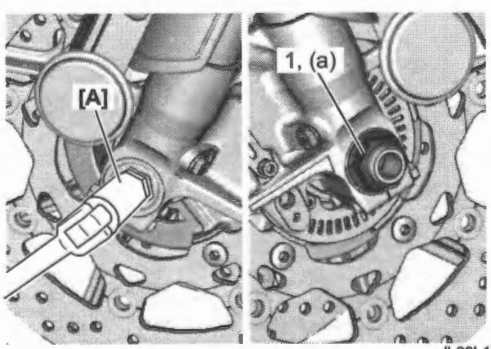

IL06L1240010-01

5) Install the front brake calipers. ☞(Page 4B-3)

6) Tighten the two axle pinch bolts (1) on the right front fork leg to the specified torque.

Tightening torque
Front axle pinch bolt (a): 23 N·m (2.3 kgf-m, 17.0 lbf-ft)

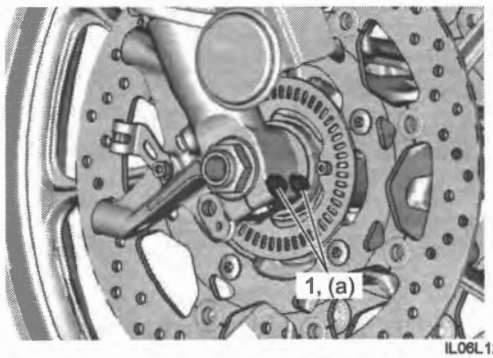

IL06L1240011-01

7) Install the front wheel speed sensor. ☞(Page 4E-56)

8) Move the front fork up and down 4 or 5 times to stabilize the front axle.

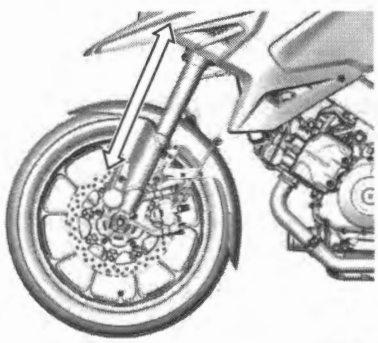

IL06L1240013-01

9) Tighten the two axle pinch bolts (1) on the left front fork leg to the specified torque.

Tightening torque
Front axle pinch bolt (a): 23 N·m (2.3 kgf-m, 17.0 lbf-ft)

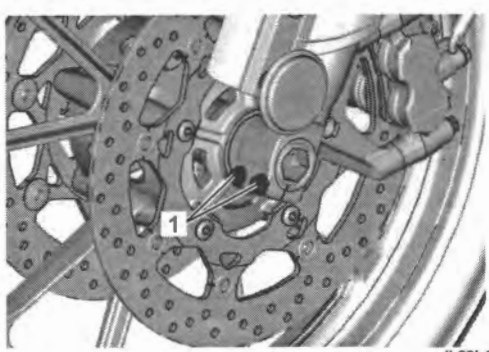

IL06L1240014-02

Front Wheel Dust Seal / Front Wheel Bearing Removal and Installation

BENL06L22406005

Refer to "Front Wheel Assembly Removal and Installation" (Page 2D-5).

Removal

1) Remove the dust seals (1) on both sides with the special tool.

Special tool
(A): 09913–50121

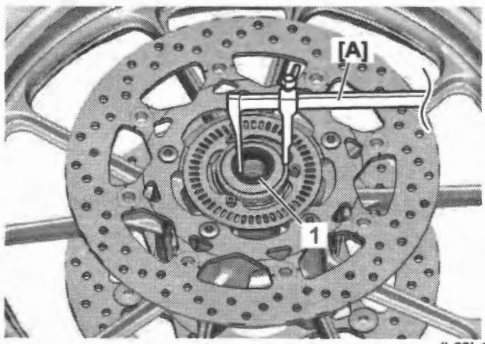

IL06L1240015-01

2) Remove the bearings (1) on both sides with the special tool.

Special tool
(A): 09921–20240

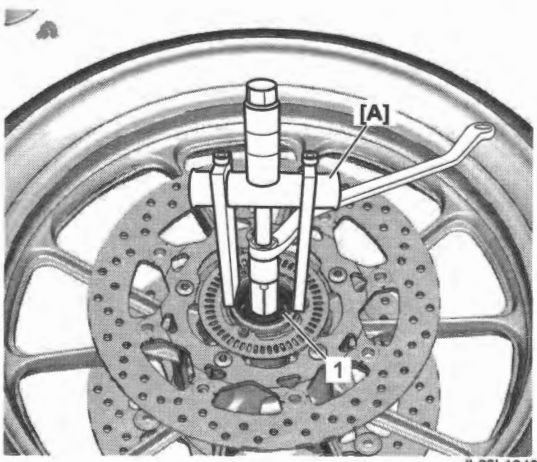

IL06L1240016-01

3) Remove the spacer (1).

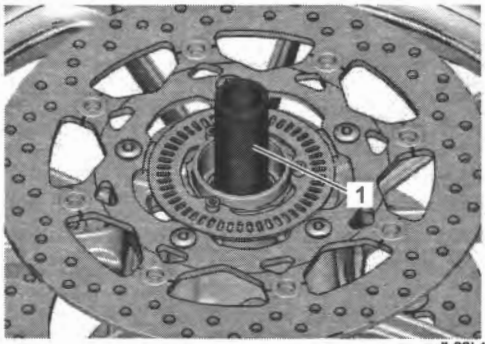

IL06L1240017-01

Installation

1) Apply grease to the new wheel bearings.

Grease 99000–25011 (SUZUKI SUPER GREASE A)



I649G1240019-02

2) Using the special tools, bump and install the right wheel bearing (1) against the wheel hub then insert the spacer (2).

3) Also bump and install the left wheel bearing (3) against the spacer.

NOTICE

The sealed cover of the bearing must face outside.

Special tool
(A): 09941–34513
(B): 09924–84510

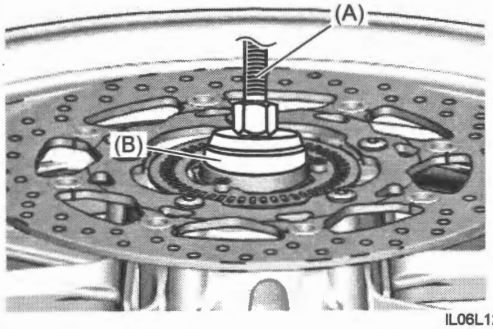

IL06L1240018-01

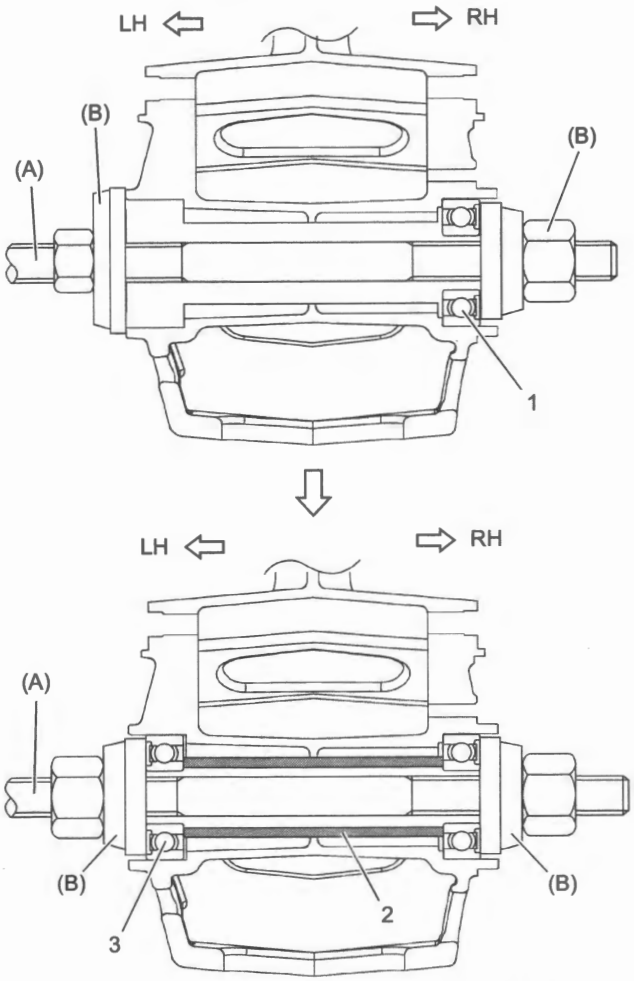

IL06L1240019-01

4) Install the new dust seals on both sides with the special tool.

Special tool
(A): 09913–70210

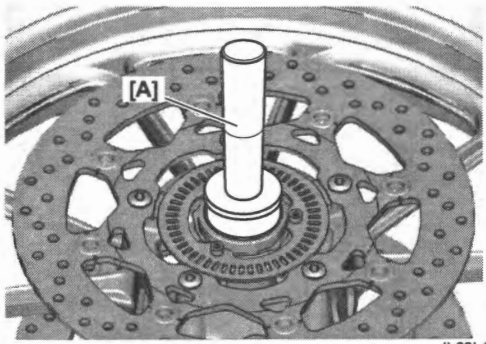

IL06L1240020-01

5) Apply grease to the lip of the dust seals.

"A": Grease 99000–25011 (SUZUKI SUPER GREASE A)

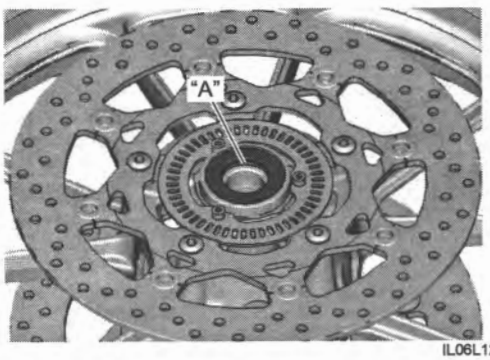

IL06L1240021-01

Rear Wheel Components

BENL06L22406006

DL1050RQ

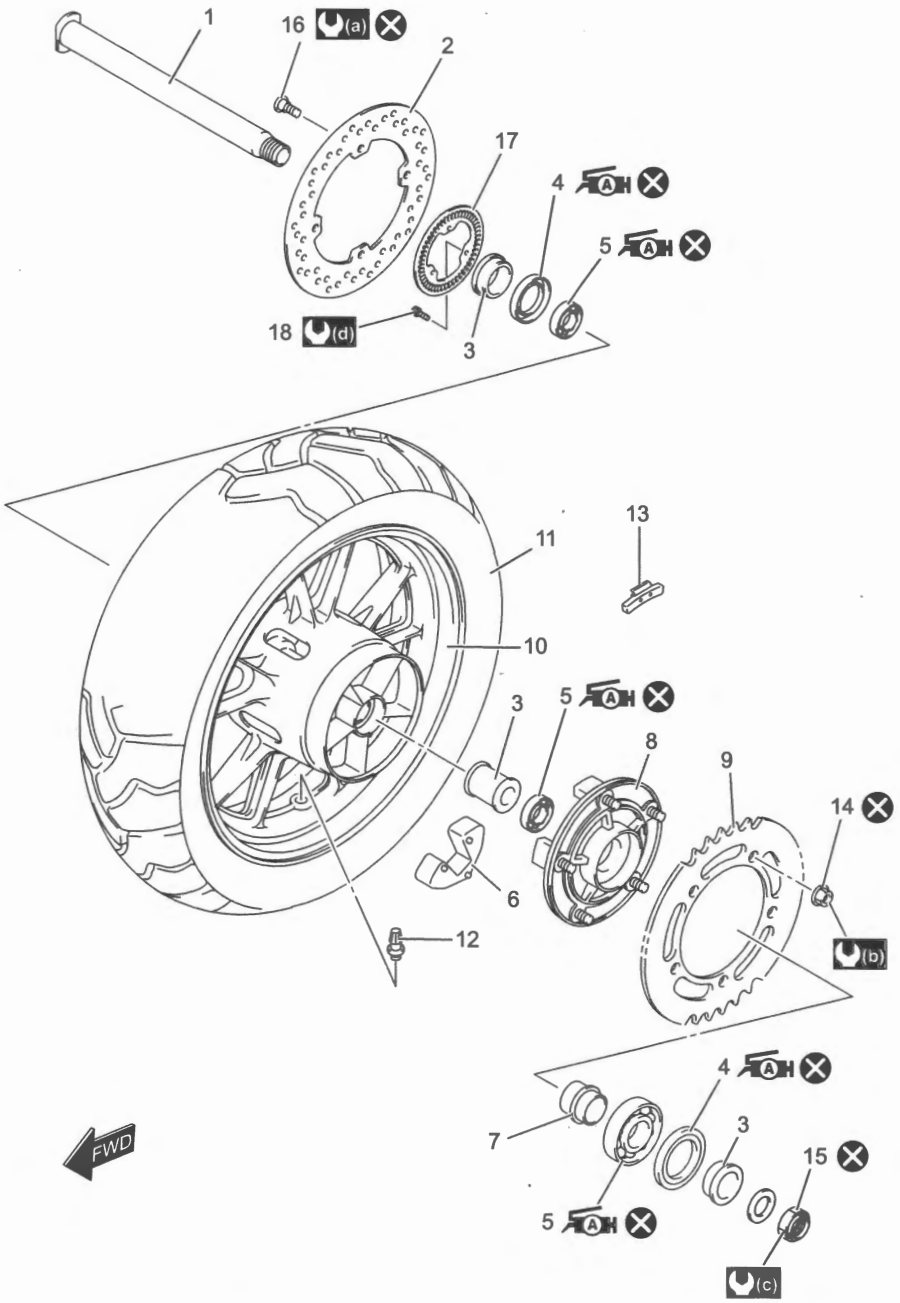

IL06L1240022-01

1. Rear axle	9. Rear sprocket	17. Wheel speed sensor rotor
2. Brake disc	10. Rear wheel	18. Wheel speed sensor rotor bolt
3. Spacer	11. Rear tire	(a) : 23 N·m (2.3 kgf-m, 17.0 lbf-ft)
4. Dust seal	12. Air valve	(b) : 60 N·m (6.0 kgf-m, 43.5 lbf-ft)
5. Bearing	13. Wheel balancer	(c) : 100 N·m (10.0 kgf-m, 72.5 lbf-ft)
6. Rear wheel damper	14. Rear sprocket nut	(d) : 6.5 N·m (0.65 kgf-m, 5.0 lbf-ft)
7. Retainer	15. Rear axle nut	A H : Apply grease.
8. Rear sprocket mounting drum	16. Brake disc bolt	⊗ : Do not reuse.

DL1050RC

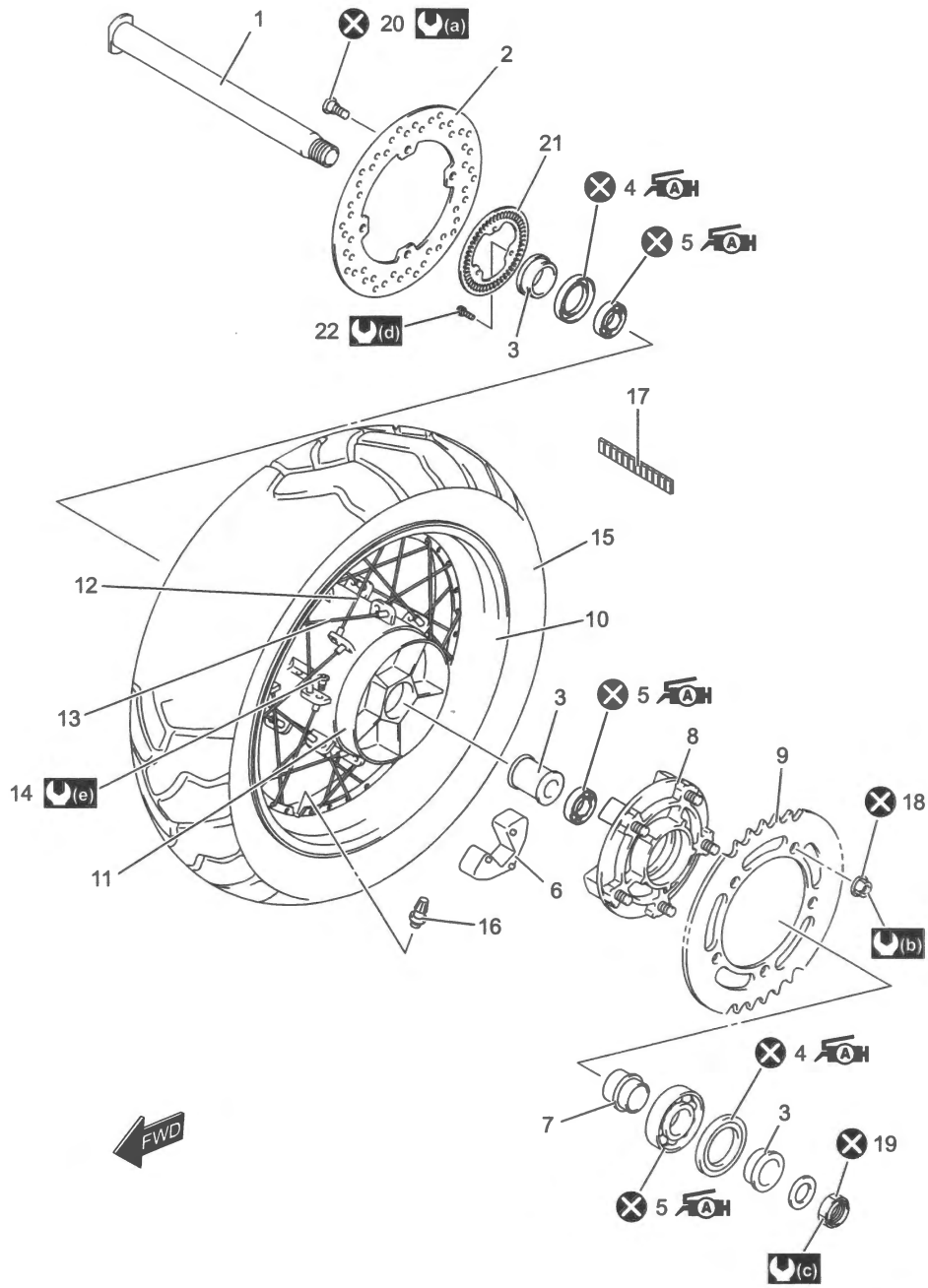

IL06L1240023-01

1. Rear axle	11. Rear wheel hub	21. Wheel speed sensor rotor
2. Brake disc	12. Rear inner spoke	22. Wheel speed sensor rotor bolt
3. Spacer	13. Rear outer spoke	(a) : 23 N·m (2.3 kgf-m, 17.0 lbf-ft)
4. Dust seal	14. Spoke nipple	(b) : 60 N·m (6.0 kgf-m, 43.5 lbf-ft)
5. Bearing	15. Rear tire	(c) : 100 N·m (10.0 kgf-m, 72.5 lbf-ft)
6. Rear wheel damper	16. Air valve	(d) : 6.5 N·m (0.65 kgf-m, 5.0 lbf-ft)
7. Retainer	17. Balancer weight	(e) : 4.5 N·m (0.45 kgf-m, 3.5 lbf-ft)
8. Rear sprocket mounting drum	18. Rear sprocket nut	A H : Apply grease.
9. Rear sprocket	19. Rear axle nut	: Do not reuse.
10. Rear wheel rim	20. Brake disc bolt	

Rear Wheel Assembly Construction (DL1050RC)

BENL06L22406007

NOTE

DL1050RC differs from DL1050RQ in the wheel shape and installation of the balancer weight.

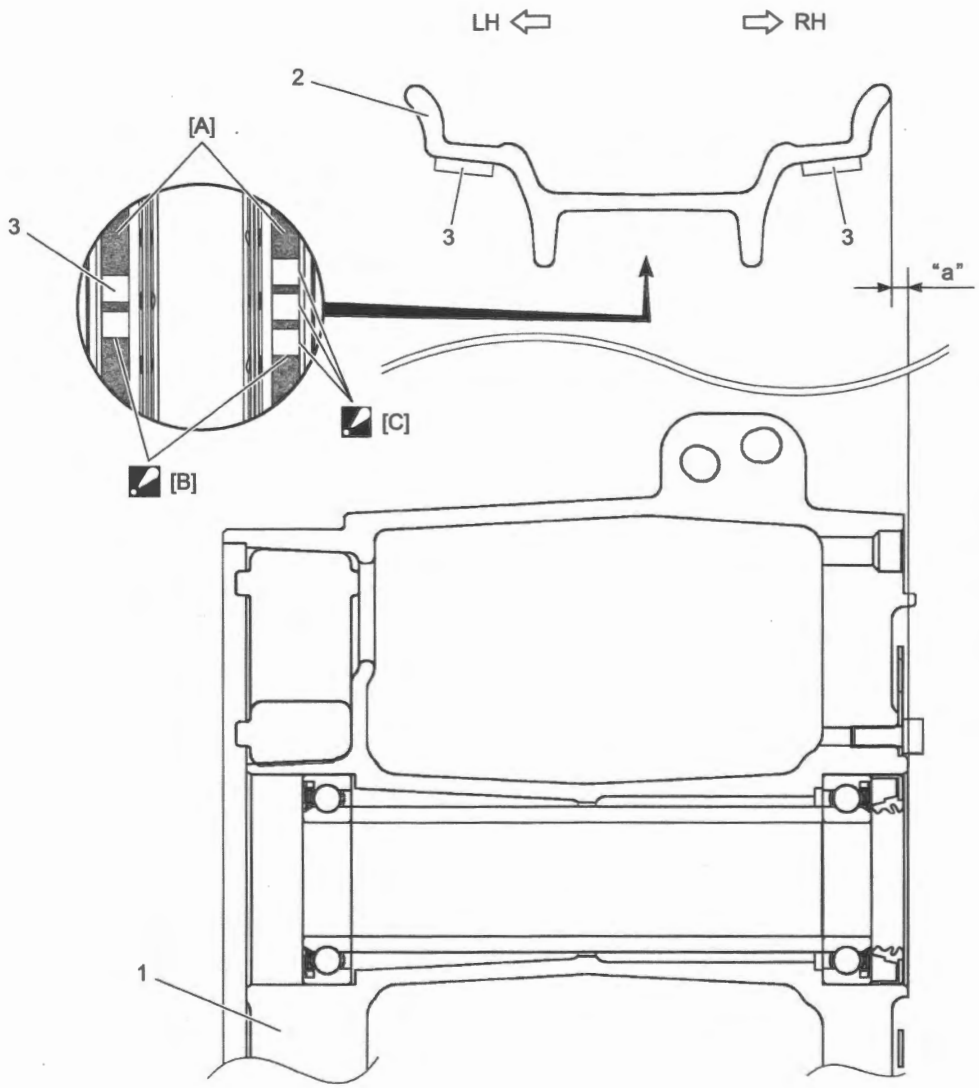

IL06L1240024-01

[A]: Wheel rim flat surface	1. Rear wheel rim	"a": 3.2 – 4.2 mm (0.13 – 0.17 in)
[B]: Asymmetric positioning of the balancer weights is allowed.	2. Rear wheel hub	
[C]: When sticking a number of weights, a little opening between the adjoining weights is allowed. However, overlapping is prohibited.	3. Balancer weight	

Rear Wheel Spoke Construction (DL1050RC)

BENL06L22406008

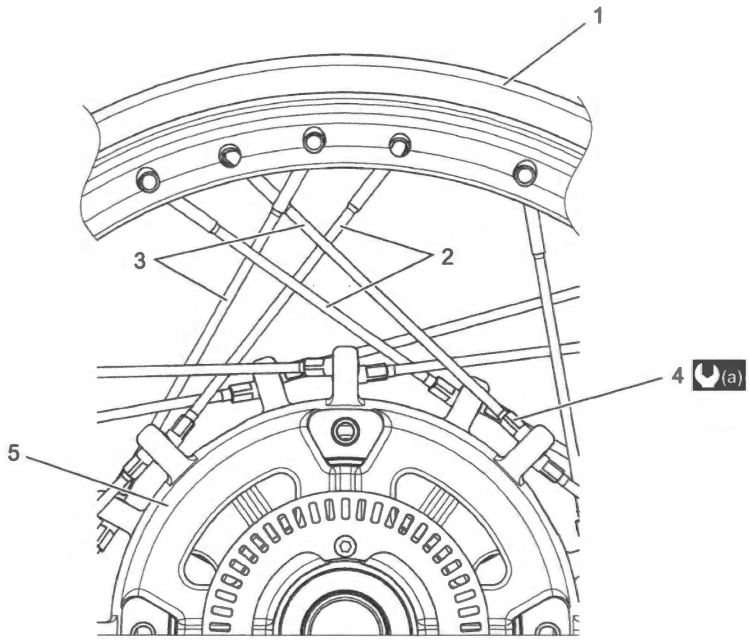

IJ31J1240005-02

1. Rear wheel rim	3. Rear outer spoke	5. Rear wheel hub
2. Rear inner spoke	4. Spoke nipple	(a) : 4.5 N·m (0.45 kgf-m, 3.5 lbf-ft)

Rear Wheel Assembly Removal and Installation

BENL06L22406009

Removal

1) Remove the rear wheel speed sensor mounting bolt. ☞(Page 4E-57)
2) Remove the rear axle nut (1) and washer (2).

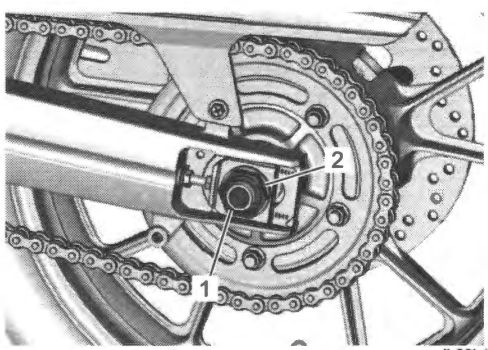

IL06L1240030-01

3) Raise the rear wheel off the ground and support the motorcycle with a jack or wooden block.
4) Draw out the rear axle.
5) Remove the drive chain (1) from the rear sprocket (2).

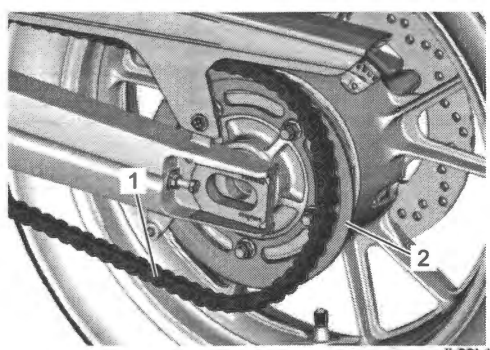

IL06L1240031-02

6) Remove the rear brake caliper (1) from the swingarm.
7) Remove the rear wheel.

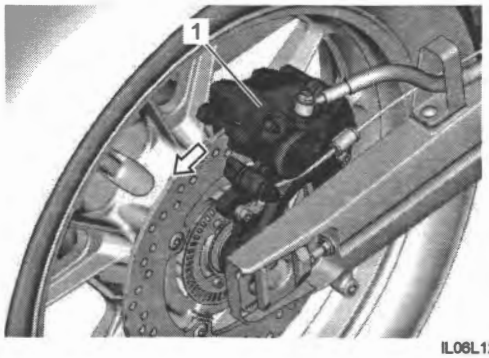

IL06L1240032-01

8) Remove the left and right spacers (1).

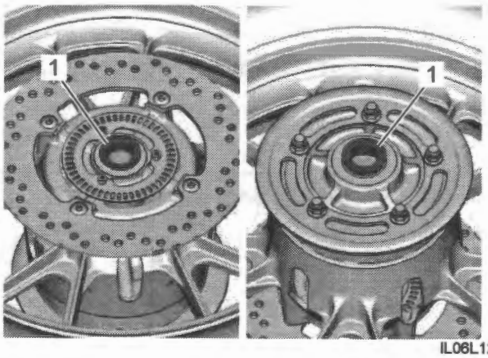

IL06L1240033-02

Installation

1) Install the left and right spacers (1).

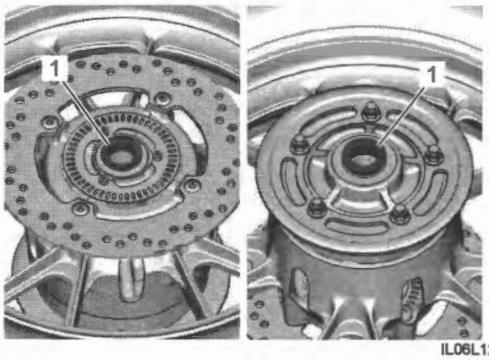

IL06L1240033-02

2) Install the rear wheel.

⚠ WARNING

The directional arrow on the tire should point to the wheel rotation, when installing the wheel.

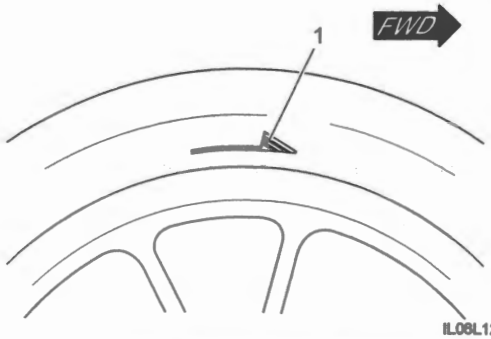

IL06L1240009-03

3) Install the rear brake caliper to the swingarm.
4) Install the drive chain to the rear sprocket.
5) Install the rear axle (1) and washer (2).
6) Tighten the new rear axle nut (3) temporarily.

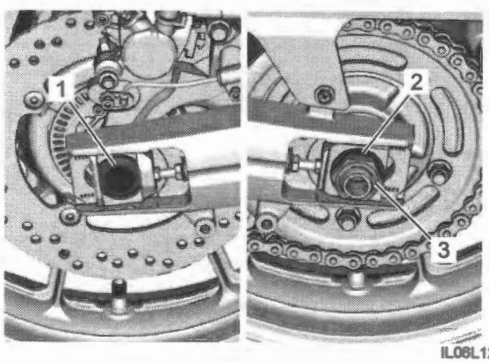

IL06L1240034-01

7) Remove the jack or a wooden block.
8) Adjust the chain slack. Refer to "Drive Chain Inspection and Adjustment" in Section 3A (Page 3A-2).
9) Install the rear wheel speed sensor. ☞(Page 4E-57)

Rear Wheel Dust Seal / Rear Wheel Bearing Removal and Installation

BENL06L22406010

Refer to "Rear Sprocket Mounting Drum Assembly Removal and Installation" in Section 3A (Page 3A-5).

Removal

1) Remove the rear wheel dampers. ☞(Page 2D-18)
2) Remove the rear wheel speed sensor rotor. ☞(Page 4E-58)
3) Remove the dust seal (1) on both sides with the special tool.

Special tool
(A): 09913–50121

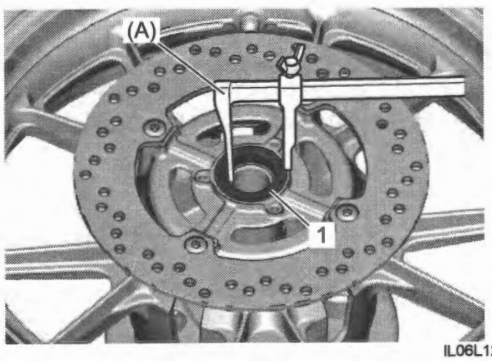

IL06L1240035-01

4) Remove the bearings (1) on both sides with the special tool.

Special tool
(A): 09921–20240

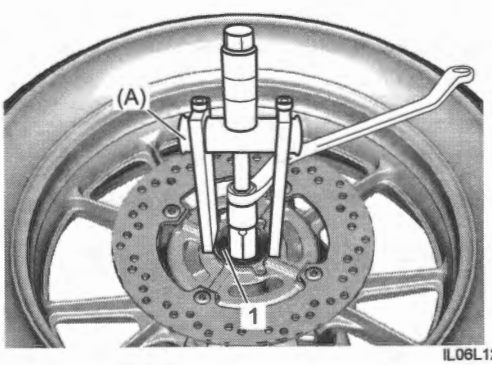

IL06L1240036-01

5) Remove the spacer (1).

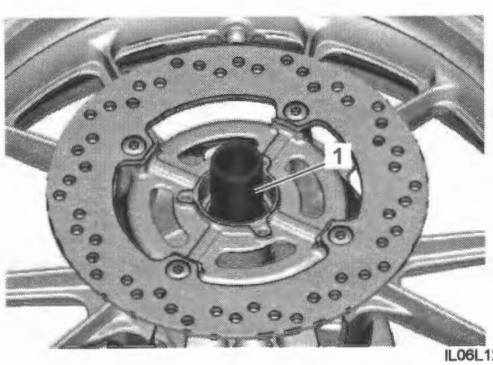

IL06L1240037-01

Installation

1) Apply grease to the new wheel bearings.

Grease 99000–25011 (SUZUKI SUPER GREASE A)



I649G1240019-02

2) Using the special tools, bump and install the right wheel bearing (1) against the wheel hub then insert the spacer (2).
3) Also bump and install the left wheel bearing (3) against the spacer.

NOTICE

The sealed cover of the bearing must face outside.

Special tool
(A): 09941–34513
(B): 09924–84510

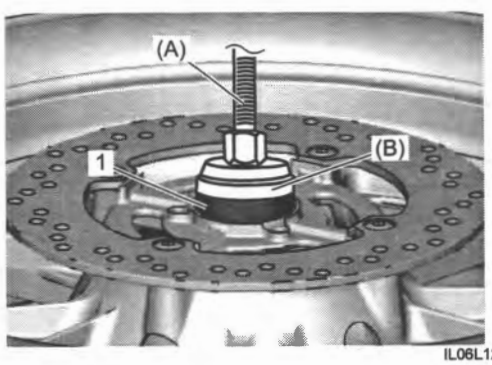

IL06L1240038-01

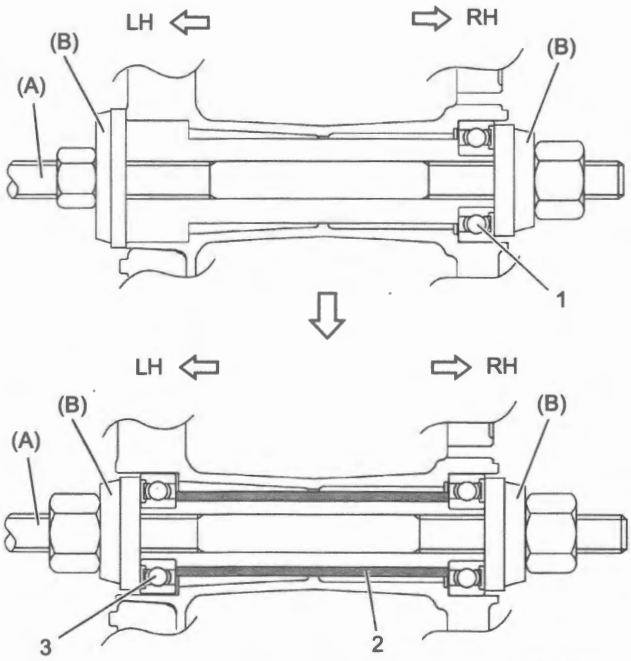

IL06L1240039-01

4) Install a new dust seal with the special tool.

Special tool
(A): 09913–70210

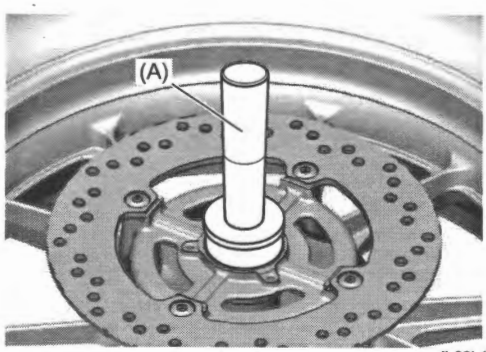

IL06L1240040-01

5) Apply grease to the dust seal lip.

"A": Grease 99000–25011 (SUZUKI SUPER GREASE A)

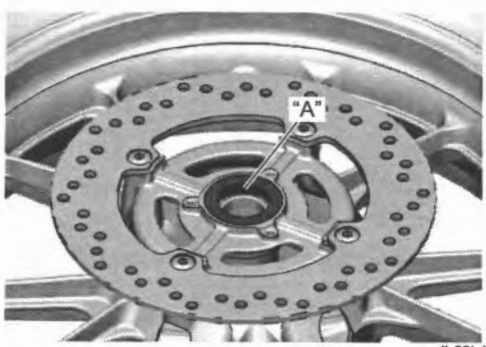

IL06L1240041-01

6) Install the rear wheel speed sensor rotor. ☞(Page 4E-58)
7) Install the rear wheel dampers. ☞(Page 2D-18)

Wheel / Wheel Axle Inspection

BENL06L22406011

Refer to "Front Wheel Assembly Removal and Installation" (Page 2D-5).
Refer to "Rear Wheel Assembly Removal and Installation" (Page 2D-12).

Wheel (DL1050RQ)
Wheel rim runout

1) Remove the brake pads.
   - Front: ☞(Page 4B-2)
   - Rear: ☞(Page 4C-2)
2) Make sure that the wheel runout checked as shown does not exceed the service limit. An excessive runout is usually due to worn or loosened wheel bearings and can be reduced by replacing the bearings.
   - Front: ☞(Page 2D-7)
   - Rear: ☞(Page 2D-14)

   If bearing replacement fails to reduce the runout, replace the wheel.

Wheel rim runout
Front
Axial & Radial [Limit]: 2.0mm (0.08in)
Rear
Axial & Radial [Limit]: 2.0mm (0.08in)

Special tool
(A): 09900–20607

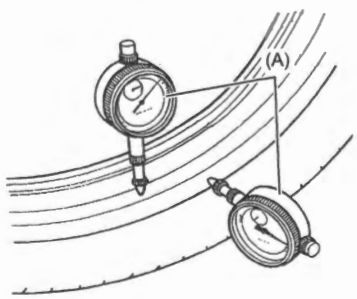

ID26J1240033-01

3) Install the brake pads.
   - Front: ☞(Page 4B-2)
   - Rear: ☞(Page 4C-2)

Wheel (DL1050RC)

Spoke

Refer to "Spoke Wheel (DL1050RC)" in Section 0B (Page 0B-31).

Spoke nipple

Refer to "Spoke Wheel (DL1050RC)" in Section 0B (Page 0B-31).

Distance between wheel hub and rim

1) Remove the brake disc.
   - Front: ☞(Page 4B-5)
   - Rear: ☞(Page 4C-7)
2) Place the wheel on a level surface, and then measure the right side distance "a" between the hub (1) and rim (2) using a straightedge and vernier caliper. Check that the distance is within the specified range.

   Front wheel hub right end surface to rim distance
   [Standard]: 34.9 – 35.7 mm (1.37 – 1.41 in)

   Rear wheel hub right end surface to rim distance
   [Standard]: 3.2 – 4.2 mm (0.13 – 0.17 in)

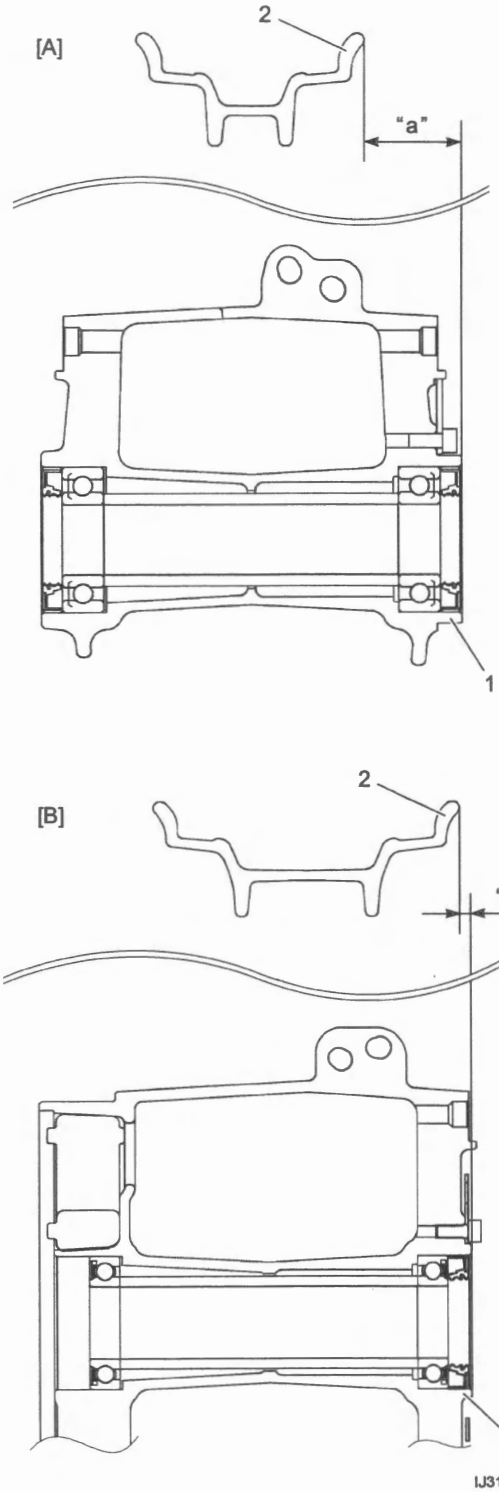

IJ31J1240006-03

[A]: Front wheel	[B]: Rear wheel

3) Adjust the distance if the measured value is out of the specified range.

Wheel rim runout

1) Remove the brake pads.
   - Front: ☞(Page 4B-2)
   - Rear: ☞(Page 4C-2)
2) Make sure that the wheel rim runout does not exceed the service limit. An excessive runout is usually due to worn or loosened wheel bearings and can be reduced by replacing the bearings.
   - Front: ☞(Page 2D-7)
   - Rear: ☞(Page 2D-14)

   If bearing replacement fails to reduce the runout, adjust or replace the wheel.

NOTE

The welded area of the wheel rim is excluded from the measurement of wheel runout.

Wheel rim runout
Front
Axial & Radial [Limit]: 2.0mm (0.08in)
Rear
Axial & Radial [Limit]: 2.0mm (0.08in)

Special tool
(A): 09900–20607

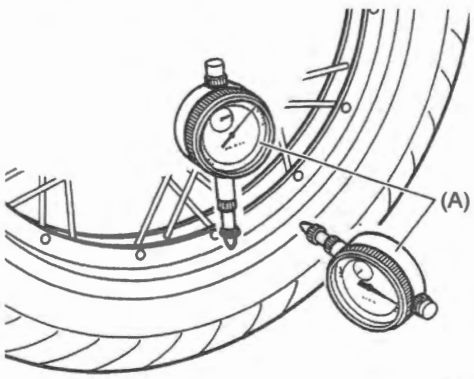

IJ31J1240007-01

3) Install the brake pads.
   - Front: ☞(Page 4B-2)
   - Rear: ☞(Page 4C-2)

Wheel Rim

Refer to "Wheel Rim / Air Valve Inspection and Cleaning" (Page 2D-20).

Wheel Axle

Using a dial gauge, check the wheel axle for runout, If the runout exceeds the limit, replace the wheel axle. Actual runout is 1/2 of the total indicator reading.

Wheel axle runout
Front & Rear [Limit]: 0.25mm (0.010in)

Special tool
(A): 09900–20607
(B): 09900–20701
(C): 09900–21304

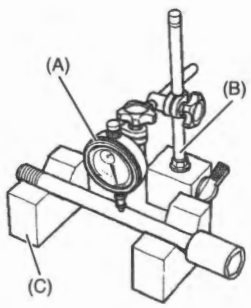

ID26J1240034-03

Dust Seal

Inspect the dust seals lip (1) for wear or damage. If any defects is found, replace the dust seals with new ones.

- Front: ☞(Page 2D-7)

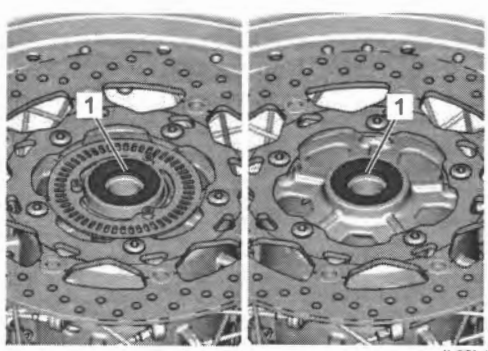

IL06L1240044-01

- Rear: ☞(Page 2D-14)

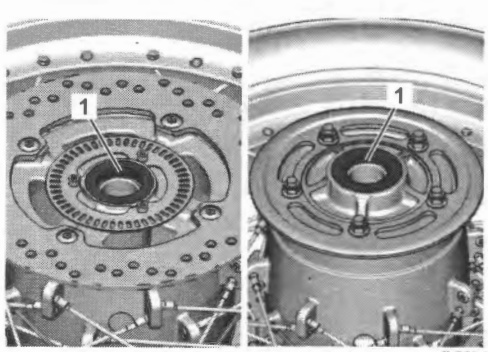

IL06L1240045-01

Wheel Bearing

1) Remove the rear sprocket mounting drum assembly (Rear wheel only). ☞(Page 3A-5)
2) Inspect the play of the wheel bearings by hand while they are in the wheel. Rotate the inner race by hand to inspect for abnormal noise and smooth rotation. Replace the bearing if there is anything unusual.
   - Front: ☞(Page 2D-7)
   - Rear: ☞(Page 2D-14)

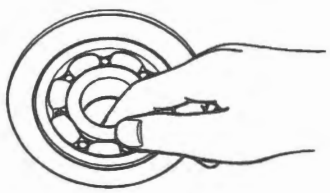

I649G1240015-02

3) Install the rear sprocket mounting drum assembly (Rear wheel only). ☞(Page 3A-5)

Brake Disc

Refer to "Front Brake Disc Inspection" in Section 4B (Page 4B-6).
Refer to "Rear Brake Disc Inspection" in Section 4C (Page 4C-7).

Wheel Speed Sensor Rotor

Refer to "Wheel Speed Sensor and Sensor Rotor Inspection" in Section 4E (Page 4E-58).

Rear Sprocket

Refer to "Rear Sprocket Mounting Drum / Sprocket Inspection" in Section 3A (Page 3A-6).

Tire

Refer to "Tire Inspection and Cleaning" (Page 2D-19).

Rear Wheel Damper Removal and Installation

BENL06L22406012

Refer to "Rear Sprocket Mounting Drum Assembly Removal and Installation" in Section 3A (Page 3A-5).

Removal

1) Remove the rear wheel dampers (1).

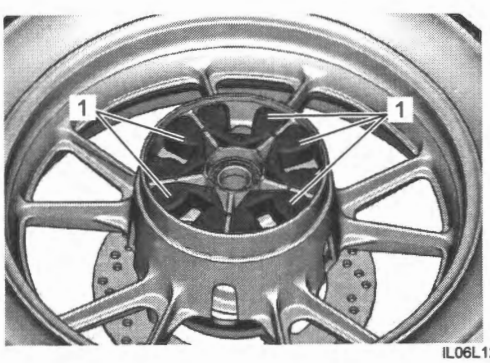

IL06L1240046-01

Installation

Install the rear wheel dampers in the reverse order of removal. Pay attention to the following points:

- Install the rear wheel dampers (1).

NOTE

Three protrusions (2) on the wheel damper must face outside.

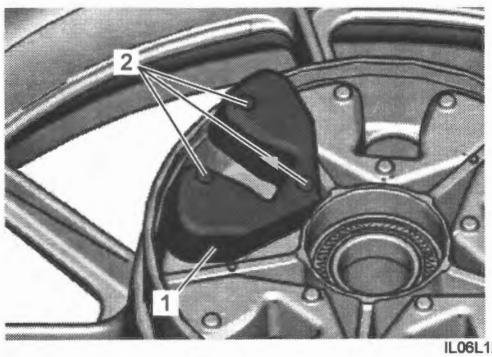

IL06L1240047-01

Rear Wheel Damper Inspection

BENL06L22406013

Inspect the rear wheel dampers for wear and damage. Replace the damper if there is anything unusual.

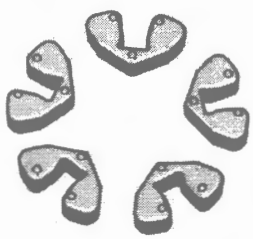

IL06L1240048-01

Tire Inspection and Cleaning

BENL06L22406014

Refer to "Tires" in Section 0B (Page 0B-25).

Tire Removal and Installation

BENL06L22406015

Refer to "Front Wheel Assembly Removal and Installation" (Page 2D-5).
Refer to "Rear Sprocket Mounting Drum Assembly Removal and Installation" in Section 3A (Page 3A-5).

NOTICE

For removal and installation procedure of tire onto the wheel, follow the instructions given by the tire changer manufacturer.

Removal

The most critical factor of a tubeless tire is the seal between the wheel rim and the tire bead. For this reason, it is recommended to use a tire changer that can satisfy this sealing requirement and can make the operation efficient as well as functional.

NOTE

When replacing the tire with a new one, the tire mark (1) should be aligned with the valve position. However, when removing the tire in case of repair or inspection, mark the tire with a chalk to indicate the tire position relative to the valve position. Even though the tire is refitted to the original position after repairing puncture, the tire may have to be balanced again since such a repair can cause imbalance.

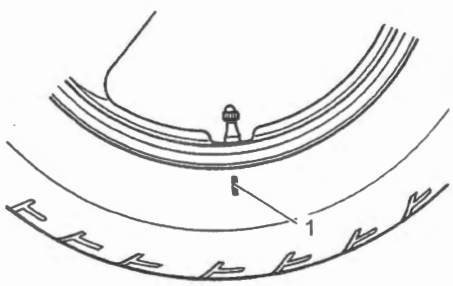

IE31J1240036-01

Installation

NOTICE

- **Do not use oil, grease or gasoline on the tire bead in place of tire lubricant.**
- **Do not reuse the air valve which has been once removed.**

1) Apply tire lubricant to the tire bead.

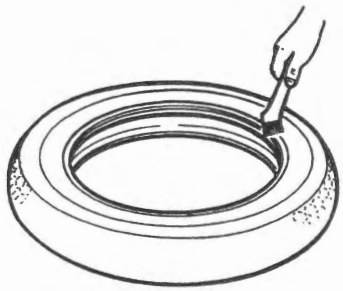

I649G1240038-02

2) Install the tire aligning the arrow (1) on the side wall with the direction of the wheel rotation.

NOTE

Align the chalk mark put on the tire at the time of removal with the valve position.

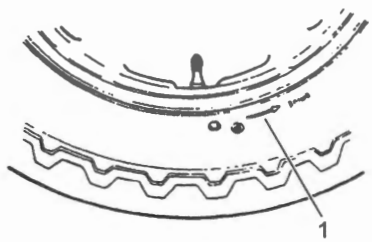

ID26J1240047-02

3) Bounce the tire several times while rotating. This makes the tire bead expand outward to contact the wheel, thereby facilitating air inflation.
4) Inflate the tire.

⚠ WARNING

- **Do not inflate the tire to more than 400 kPa (4.0 kgf/cm², 58 psi). If inflated beyond this limit, the tire can burst and possibly cause injury. Do not stand directly over the tire while inflating.**
- **In the case of preset pressure air inflator, pay special care for the set pressure adjustment.**

5) In this condition, check the "rim line" (1) cast on the tire side walls. The line must be equidistant from the wheel rim all around.
6) If the distance between the rim line (1) and wheel rim varies, this indicates that the bead is not properly seated. If this is the case, deflate the tire completely and unseat the bead for both sides. Coat the bead with lubricant and fit the tire again.

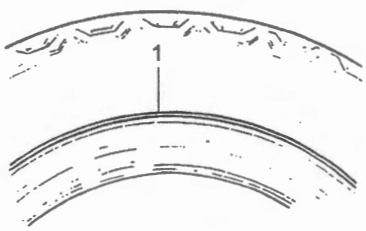

IE31J1240037-01

7) When the bead has been fitted properly, install the valve core and adjust the pressure to specification. ☞(Page 0B-25)
8) As necessary, adjust the tire balance. ☞(Page 2D-21)

Wheel Rim / Air Valve Inspection and Cleaning

BENL06L22406016

Refer to "Tire Removal and Installation" (Page 2D-19).
Refer to "Air Valve Removal and Installation" (Page 2D-20).

Wheel Rim

Wipe the wheel clean and check for the following points:

- Distortion and crack.
- Any flaws and scratches at the bead seating area.
- Wheel rim runout. ☞(Page 2D-15)

Wheel rim size
Front [Standard]: 19M/C × MT 2.50
Rear [Standard]: 17M/C × MT 4.00

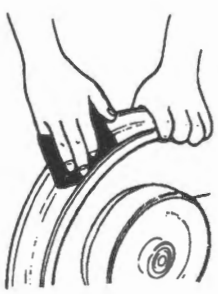

I649G1240041-02

Air Valve

Inspect the air valve (1) for peeling and damage. If any defect is found, replace the air valve with a new one.

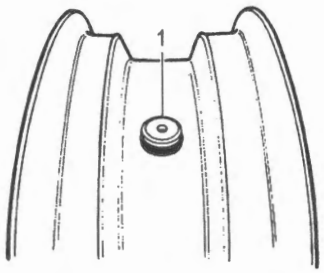

IE31J1240038-01

Inspect the valve core seal (1) for wear and damage. If any defect is found, replace the valve core with a new one.

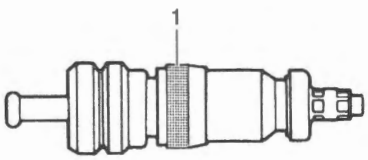

IE31J1240039-01

Air Valve Removal and Installation

BENL06L22406017

Refer to "Tire Removal and Installation" (Page 2D-19).

Removal

1) Remove the air valve (1) from the wheel.

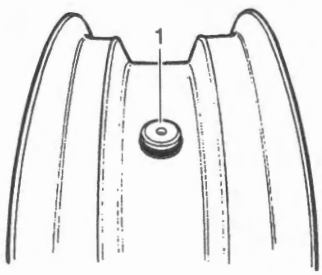

IE31J1240040-01

Installation

1) Any dust or rust around the valve hole (1) must be cleaned off.

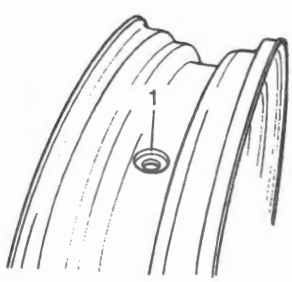

IE31J1240041-01

2) Install the new air valve (1) into the air valve hole with a special tire lubricant or neutral soapy liquid applied at the valve lip (2).

NOTICE

Be careful not to damage the valve lip of the air valve.

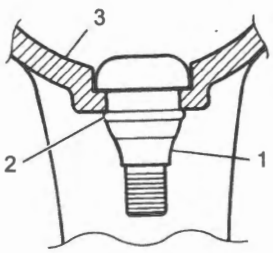

ID26J1240049-02

3. Wheel

Wheel Balance Check and Adjustment

BENL06L22406018

Refer to "Front Wheel Assembly Removal and Installation" (Page 2D-5).
Refer to "Rear Sprocket Mounting Drum Assembly Removal and Installation" in Section 3A (Page 3A-5).

DL1050RQ

1) Check the wheel balance using the balancer and adjust the wheel balance if necessary.

NOTICE

For operating procedures, refer to the instructions supplied by the wheel balancer manufacturer.

2) When installing the new balancer weight (1) to the wheel (2), set the balancer weight on center rib of wheel.

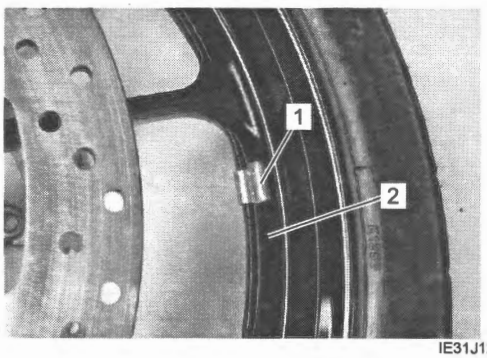

IE31J1240035-02

3) Recheck the wheel balance.

DL1050RC

1) Check the wheel balance using the balancer and adjust the wheel balance if necessary.

NOTICE

For operating procedures, refer to the instructions supplied by the wheel balancer manufacturer.

NOTE

Before checking the wheel balance, prepare the wheel installed with the tire, brake disc, wheel speed sensor rotor, wheel bearings and dust seal, and adjust the balance to obtain the unbalance value of 10 g (0.353 oz, 0.0220 lbs) or below.

2) When installing the balancer weight (1) to the wheel (2), install it to the wheel rim. Refer to "Front Wheel Assembly Construction (DL1050RC)" (Page 2D-4) or "Rear Wheel Assembly Construction (DL1050RC)" (Page 2D-11).
When sticking a number of weights, assign them as follows.

- 1 – 3 pieces:
  Stick all weight(s) on either one side.
- 4 – 12 pieces:
  - Even numbers: Assign them right and left equally.
  - Odd numbers: Assign them right and left with one difference.

NOTICE

For the adhesive type balancer weight, degrease the wheel rim before placing it.

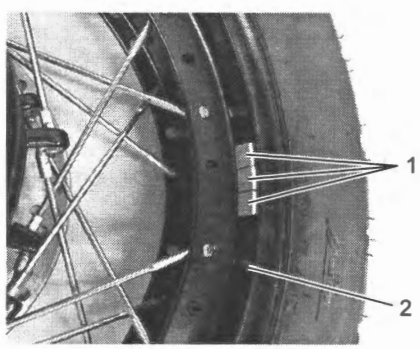

IJ31J1240013-01

3) Recheck the wheel balance.

Specifications

Tightening Torque Specifications

BENL06L22407001

Fastening part	Tightening torque			Note
	N·m	kgf-m	lbf-ft	
Front axle nut	100	10.0	72.5	☞(Page 2D-6)
Front axle pinch bolt	23	2.3	17.0	☞(Page 2D-6) / ☞(Page 2D-6)

Reference:
For the tightening torques of fasteners not specified in this page, refer to:
"Front Wheel Components" (Page 2D-2)
"Front Wheel Spoke Construction (DL1050RC)" (Page 2D-5)
"Rear Wheel Components" (Page 2D-9)
"Rear Wheel Spoke Construction (DL1050RC)" (Page 2D-12)
"Fasteners Information" in Section 0C (Page 0C-10)

Special Tools and Equipment

Recommended Service Material

BENL06L22408001

Material	SUZUKI recommended product or Specification		Note
Grease	SUZUKI SUPER GREASE A	P/No.: 99000–25011	☞(Page 2D-7) / ☞(Page 2D-8) / ☞(Page 2D-14) / ☞(Page 2D-15)

NOTE

Required service material(s) is also described in:
"Front Wheel Components" (Page 2D-2)
"Rear Wheel Components" (Page 2D-9)

Special Tool

BENL06L22408002

09900–18740 Hexagon bit socket (24 mm: 1/2 sq.) ☞(Page 2D-6)	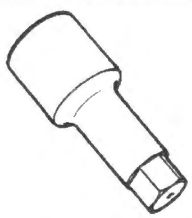	09900–20607 Dial gauge (10 x 0.01 mm) ☞(Page 2D-15) / ☞(Page 2D-17) / ☞(Page 2D-17)	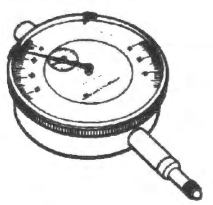
09900–20701 Dial gauge chuck ☞(Page 2D-17)	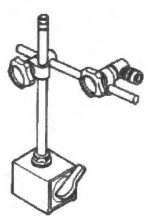	09900–21304 V blocks ☞(Page 2D-17)	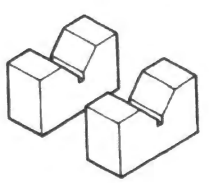
09913–50121 Oil seal remover ☞(Page 2D-7) / ☞(Page 2D-14)	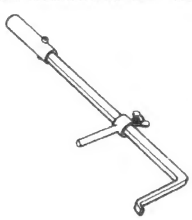	09913–70210 Bearing installer set ☞(Page 2D-8) / ☞(Page 2D-15)	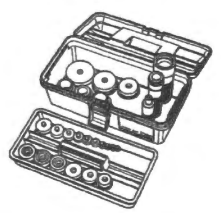

09921–20240 Bearing remover set ☞(Page 2D-7) / ☞(Page 2D-14) 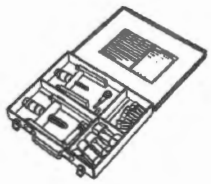	09924–84510 Bearing installer set ☞(Page 2D-8) / ☞(Page 2D-14) 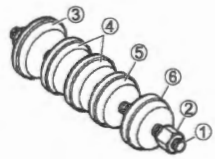
09941–34513 Bearing installer set ☞(Page 2D-8) / ☞(Page 2D-14) 	

Section 3

Driveline / Axle

CONTENTS

Precautions 3-1
Precautions 3-1
Precautions for Driveline / Axle 3-1

Drive Chain / Drive Train / Drive Shaft... 3A-1
Diagnostic Information and Procedures 3A-1
Drive Chain and Sprocket Symptom Diagnosis 3A-1
Repair Instructions 3A-1
Drive Chain Related Components 3A-1
Drive Chain Inspection and Adjustment 3A-2
Drive Chain Cleaning and Lubricating 3A-2
Engine Sprocket Removal and Installation 3A-2
Rear Sprocket Removal and Installation 3A-4
Rear Sprocket Mounting Drum Assembly Removal and Installation 3A-5
Rear Sprocket Mounting Drum / Sprocket Inspection 3A-6
Rear Sprocket Mounting Drum Dust Seal / Bearing Removal and Installation 3A-6
Drive Chain Replacement 3A-7
Specifications 3A-11
Tightening Torque Specifications 3A-11
Special Tools and Equipment 3A-11
Recommended Service Material 3A-11
Special Tool 3A-11

Precautions

Precautions

Precautions for Driveline / Axle

BENL06L23000001

Refer to "General Precautions" in Section 00 (Page 00-1).

⚠ WARNING

Never inspect or adjust the drive chain while the engine is running.

NOTICE

- **Do not use trichloroethylene, gasoline or any similar solvent. These fluids will damage the O-rings of the drive chain.**
- **Clean the drive chain with a spray-type chain cleaner and blow dry with compressed air. If the drive chain cannot be cleaned with a spray cleaner, it may be necessary to use a kerosine. Always follow the chemical manufacturer's instructions on proper use, handling and storage.**
- **Lubricate the drive chain with a heavy weight motor oil. Wipe off any excess oil or chain lubricant. Do not use any oil sold commercially as "drive chain oil". Such oil can damage the O-rings.**
- **When drive chain replacement is necessary, the original equipment type drive chain should be used.**

Drive Chain / Drive Train / Drive Shaft

Diagnostic Information and Procedures

Drive Chain and Sprocket Symptom Diagnosis

BENL06L23104001

Condition	Possible cause	Correction / Reference Item
Noisy Drive Chain	Worn sprocket.	*Replace. ☞(Page 3A-2) ☞(Page 3A-4)*
	Worn drive chain.	*Replace. ☞(Page 3A-7)*
	Stretched drive chain.	*Replace. ☞(Page 3A-7)*
	Too large drive chain slack.	*Adjust. ☞(Page 0B-19)*
	Drive chain out of adjustment.	*Adjust. ☞(Page 0B-19)*

Repair Instructions

Drive Chain Related Components

BENL06L23106001

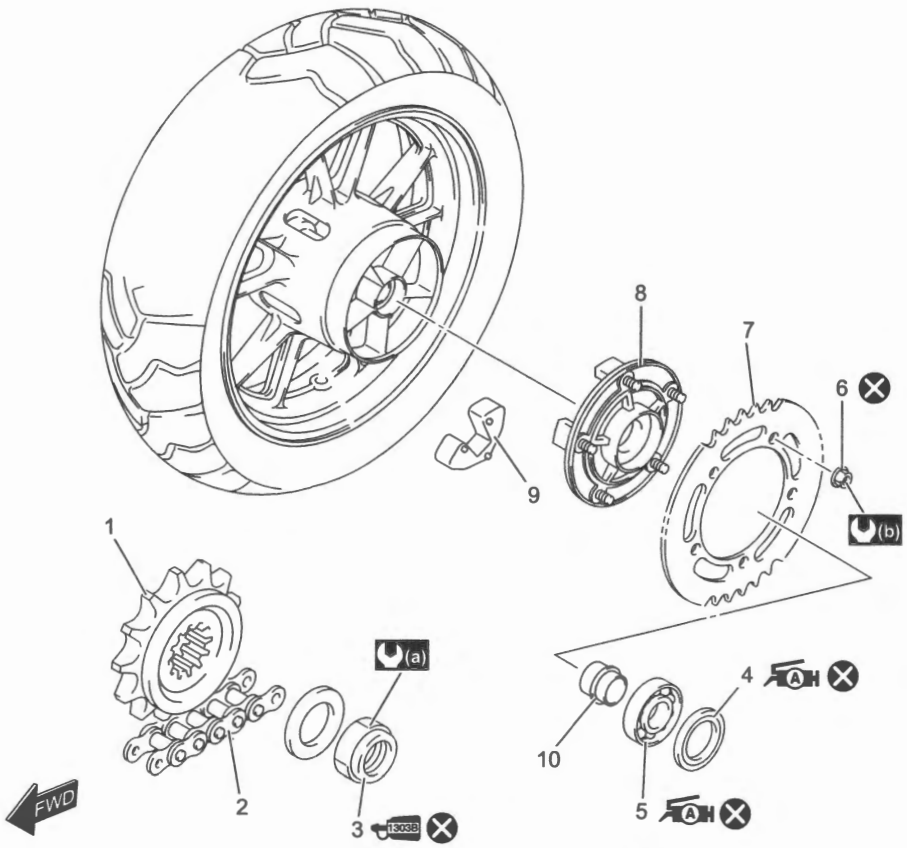

IJ31J1310001-01

1. Engine sprocket	6. Rear sprocket nut	(a) : 115 N·m (11.7 kgf-m, 85.0 lbf-ft)
2. Drive chain	7. Rear sprocket	(b) : 60 N·m (6.1 kgf-m, 44.5 lbf-ft)
3. Engine sprocket nut	8. Rear sprocket mounting drum	A : Apply grease.
4. Dust seal	9. Wheel damper	⊗ : Do not reuse.
5. Bearing	10. Retainer	

Drive Chain Inspection and Adjustment

BENL06L23106002

For inspection and adjustment procedure, refer to "Drive Chain" in Section 0B (Page 0B-19). And if necessary, replace the drive chain with a new one.

Drive Chain Cleaning and Lubricating

BENL06L23106003

1) Remove dirt and dust from the drive chain (1). Be careful not to damage the seal ring.
2) Clean the drive chain (1) with a sealed drive chain cleaner, or water and neutral detergent.

NOTICE

Cleaning the drive chain improperly can damage seal rings and ruin the drive chain.

- **Do not use a volatile solvent such as paint thinner, kerosene and gasoline.**
- **Do not use high pressure cleaner to clean the drive chain.**
- **Do not use wire brush to clean the drive chain.**

3) Use a soft brush to clean the drive chain (1). Be careful not to damage the seal ring even through using a soft brush.
4) Wipe off water and neutral detergent.
5) Lubricate with a motorcycle sealed drive chain (1) lubricant or high viscosity oil.

NOTICE

Some drive chain lubricant contains solvents and additives which could damage the seal rings in the drive chain.
Use sealed drive chain lubricant which is specifically intended for use with sealed drive chains.

6) Lubricate both front and back plates of the drive chain (1).
7) Wipe off excess lubricant after lubricating all around of the drive chain (1).

NOTE

The standard drive chain is a RK 525SMOZ8. SUZUKI recommends to use this standard drive chain as a replacement.

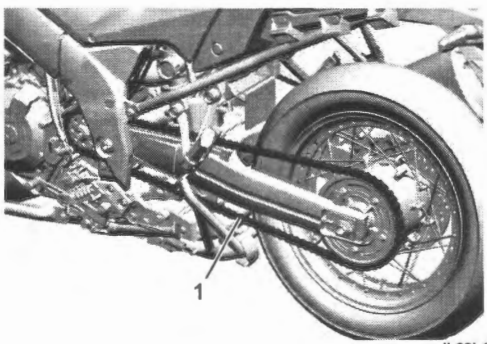

IL06L1310004-01

Engine Sprocket Removal and Installation

BENL06L23106004

Removal

1) Bind the clutch lever with a rubber band to prevent the clutch release cylinder piston form coming out.

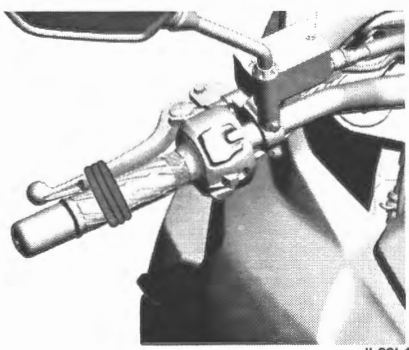

IL06L1310006-01

2) Release the clamp (1).

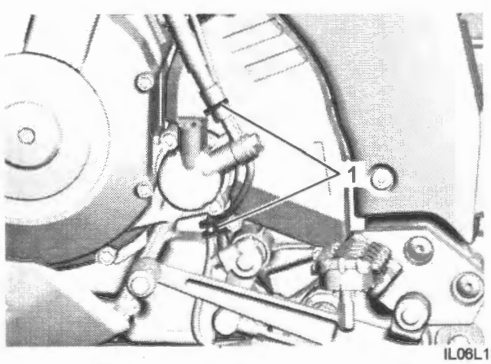

IL06L1310005-02

3) Remove the clutch release cylinder (1) and spacer (2).

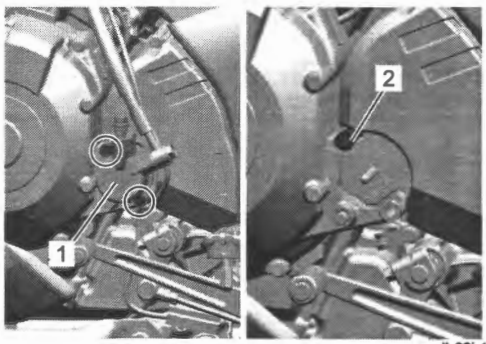

IL06L1310007-01

4) Remove the engine sprocket cover (1).

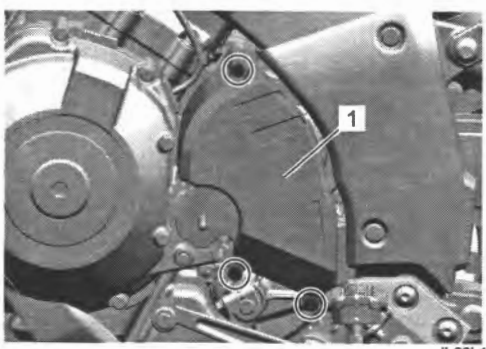

IL06L1310008-01

5) Remove the engine sprocket nut (1) while depressing the rear brake pedal.
6) Remove the washer (2).

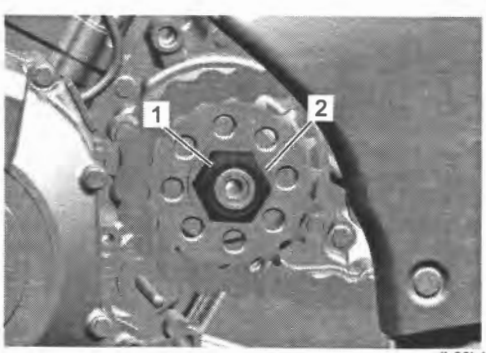

IL06L1310009-01

7) Loosen the rear axle nut (1).
8) Support the motorcycle with a jack or wooden block.
9) Loosen the left and right lock-nuts (2) and turn in the adjuster bolts (3) to provide additional chain slack.

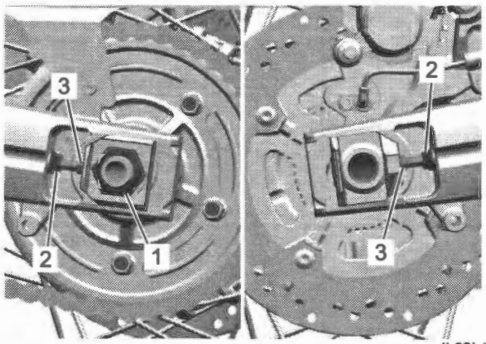

IL06L1310010-01

10) Remove the engine sprocket (1).

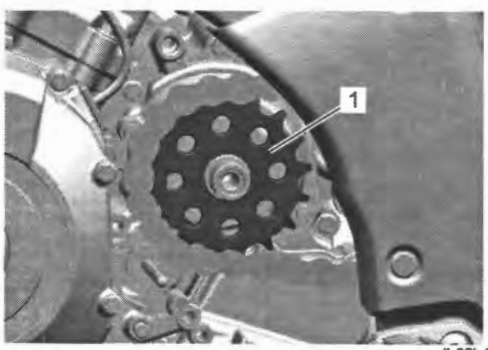

IL06L1310011-01

Installation

1) Install the engine sprocket (1) and washer (2).
2) Apply thread lock to the driveshaft.

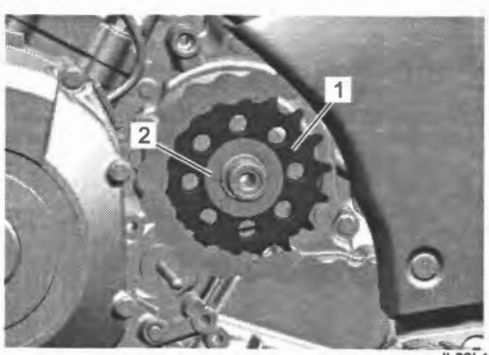

IL06L1310012-01

3) Tighten the engine sprocket new nut (1) to the specified torque.

Tightening torque
Engine sprocket nut (a): 115 N·m (11.7 kgf-m, 85.0 lbf-ft)

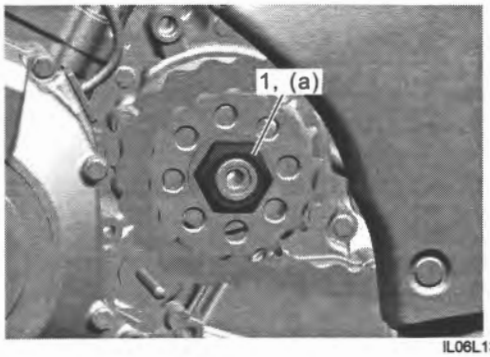

IL06L1310013-01

4) Install the engine sprocket cover (1) and tighten the engine sprocket cover bolt (2) to the specified torque.

NOTE

Fit the clamp to the bolt (2).

Tightening torque
Engine sprocket cover bolt (a): 10 N·m (1.0 kgf-m, 7.5 lbf-ft)

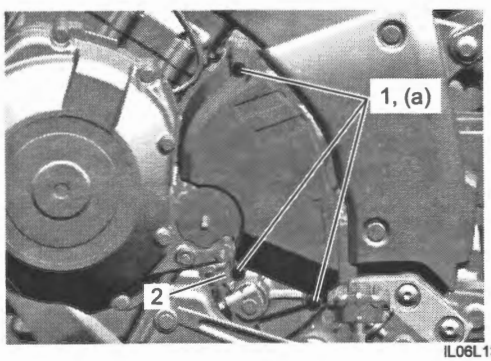

IL06L1310014-01

5) Install the spacer (1).
6) Tighten the clutch release cylinder mounting bolts (2) to the specified torque.

Tightening torque
Clutch release cylinder mounting bolt (a): 10 N·m (1.0 kgf-m, 7.5 lbf-ft)

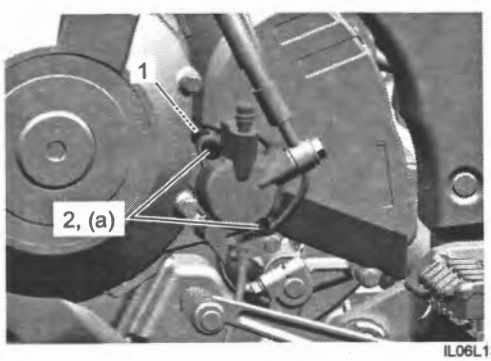

IL06L1310015-01

7) Adjust the drive chain slack. Refer to "Drive Chain" in Section 0B (Page 0B-19).

Rear Sprocket Removal and Installation

BENL06L23106005

Refer to "Rear Wheel Assembly Removal and Installation" in Section 2D (Page 2D-12).

Removal

1) Remove the rear sprocket (1).

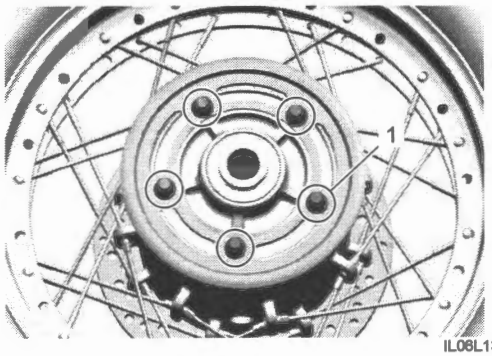

IL06L1310016-01

Installation

Install the rear sprocket in the reverse order of removal. Pay attention to the following points:

- Tighten the new rear sprocket nuts (1) to the specified torque.

NOTE

The stamped mark (2) on the sprocket should face outside.

Tightening torque
Rear sprocket nut (a): 60 N·m (6.1 kgf-m, 44.5 lbf-ft)

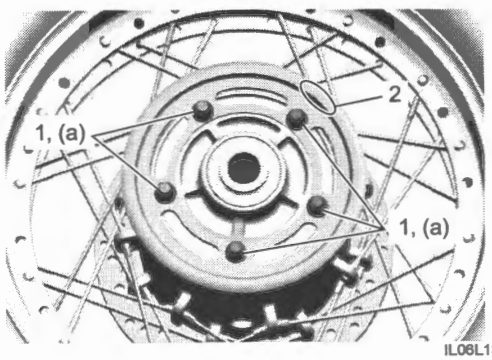

IL06L1310017-01

Rear Sprocket Mounting Drum Assembly Removal and Installation

BENL06L23106006

Refer to "Rear Wheel Assembly Removal and Installation" in Section 2D (Page 2D-12).

Removal

1) Remove the rear sprocket mounting drum assembly (1).

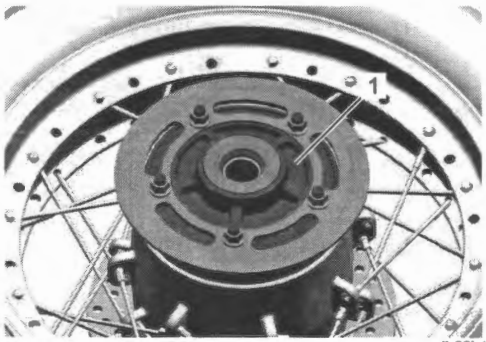

IL06L1310018-01

2) Remove the retainer (1).

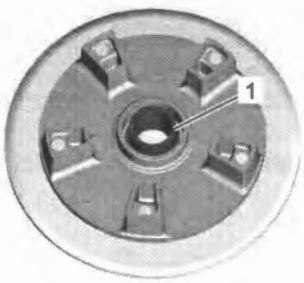

IL06L1310019-01

Installation

1) Install the retainer (1).

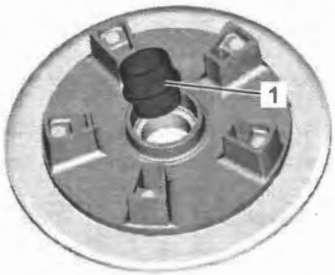

IL06L1310020-01

2) Apply grease to the contacting surface between the rear wheel hub and the rear sprocket mounting drum.

"A": Grease 99000–25011 (SUZUKI SUPER GREASE A)

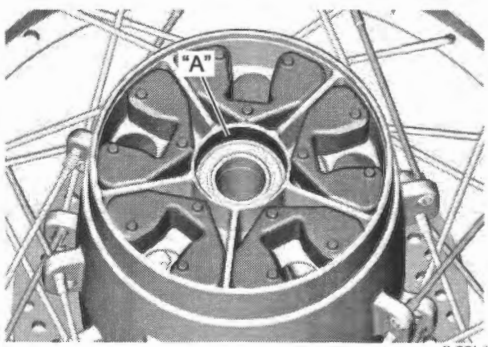

IL06L1310021-01

3) Install the rear sprocket mounting drum assembly to the rear wheel assembly.

Rear Sprocket Mounting Drum / Sprocket Inspection

BENL06L23106007

Refer to "Rear Wheel Assembly Removal and Installation" in Section 2D (Page 2D-12).

Dust Seal

Inspect the sprocket mounting drum dust seal (1) for wear or damage. If any damage is found, replace the dust seal with a new one. ☞(Page 3A-6)

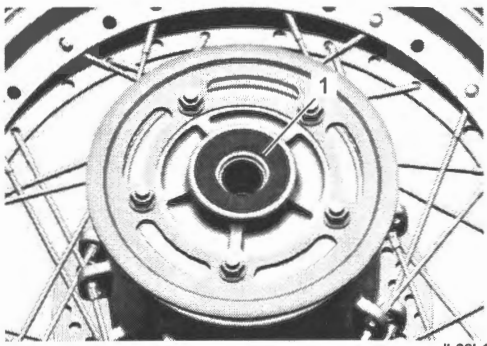

IL06L1310022-01

Bearing

Inspect the play of the sprocket mounting drum bearings by hand while they are in the wheel and drum. Rotate the inner race by hand to inspect for abnormal noise and smooth rotation. Replace the bearing if there is anything unusual. ☞(Page 3A-6)

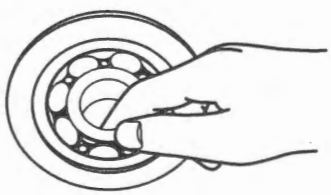

I649G1310015-03

Sprocket

1) Remove the engine sprocket cover. (Engine sprocket only) ☞(Page 3A-2)
2) Inspect the sprocket teeth for wear. If they are worn as shown, replace the engine sprocket, rear sprocket and drive chain as a set.
   - Engine: ☞(Page 3A-2)
   - Rear: ☞(Page 3A-4)

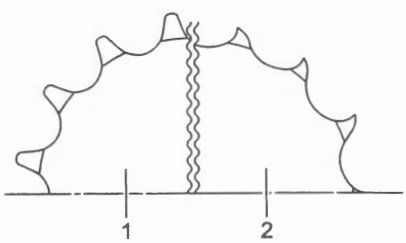

IE31J1310022-02

1. Normal wear	2. Excessive wear

3) Install the engine sprocket cover (Engine sprocket only). ☞(Page 3A-2)

Wheel Damper

Refer to "Rear Wheel Damper Inspection" in Section 2D (Page 2D-18).

Drive Chain

Refer to "Drive Chain" in Section 0B (Page 0B-19).

Rear Sprocket Mounting Drum Dust Seal / Bearing Removal and Installation

BENL06L23106008

Refer to "Rear Sprocket Mounting Drum Assembly Removal and Installation" (Page 3A-5).

Removal

1) Remove the dust seal (1) using the special tool.

Special tool
(A): 09913–50121

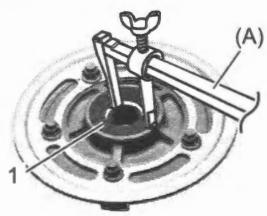

IL06L1310023-01

2) Remove the bearing (1) with the special tool.

Special tool
(A): 09921–20240

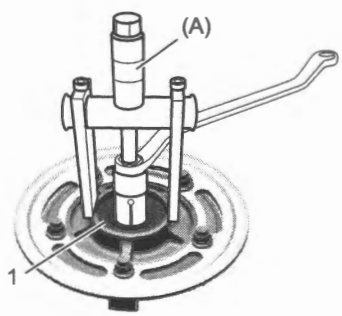

IL06L1310024-01

Installation

1) Apply grease to the new bearing.

Grease 99000–25011 (SUZUKI SUPER GREASE A)



I649G1310020-02

2) Install the bearing (1) with the special tool.

NOTICE

The sealed cover of the bearing must face inside.

Special tool
(A): 09924–84510

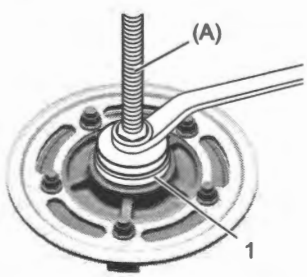

IL08L1310025-01

3) Install a new dust seal with the special tool.

Special tool
(A): 09913–70210

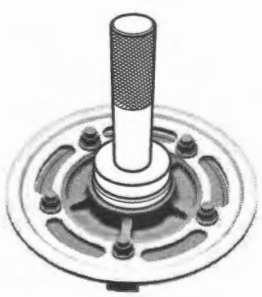

IL08L1310026-01

4) Apply grease to the dust seal lip.

"A": Grease 99000–25011 (SUZUKI SUPER GREASE A)

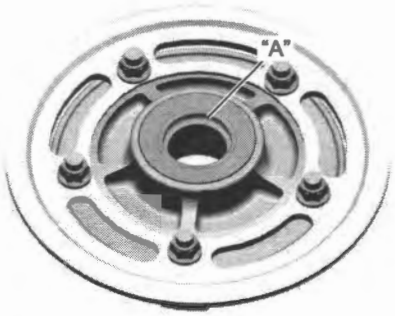

IL08L1310027-01

Drive Chain Replacement

BENL06L23106009

Use the special tool in the following procedure, to cut and rejoin the drive chain.

NOTE

When using the special tool, apply a small quantity of grease to the threaded parts of the special tool.

Special tool
09922–22712

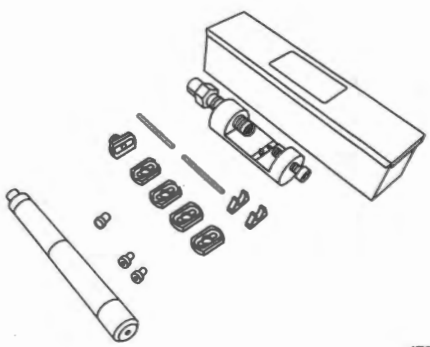

IF04K1310024-02

Drive Chain Cutting

1) Set up the special tool.

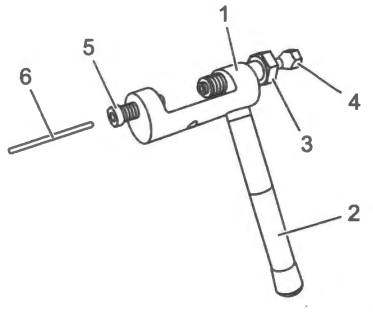

IF04K1310025-03

1. Tool body	4. Pressure bolt B
2. Grip handle	5. Adjuster bolt
3. Pressure bolt A	6. Cutting pin

2) Select the correct guide plate (1) from table below, and mount it to the tool body.

Drive chain size	Guide plate
520, 525, 530 (50)	500
532	532

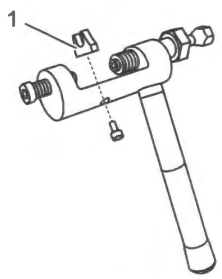

IF04K1310033-02

3) The tip of cutting pin (1) should be positioned inside "a" approximately 5 mm (0.2 in) from the end face of pressure bolt A (2).

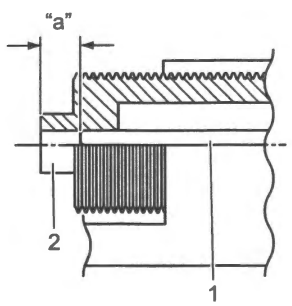

IE31J1310029-02

4) Place the drive chain link being disjointed on the guide plate (1) of the tool.

5) Turn in both the adjuster bolt (2) and pressure bolt A (3) so that each of their end hole fits over the joint pin properly.

6) Tighten the pressure bolt A (3).

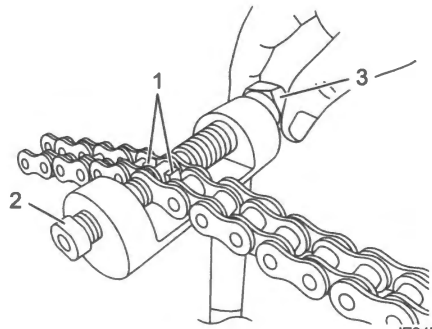

IF04K1310026-04

7) Turn in the pressure bolt B (1) with the wrench (2) and force out the joint pin (3).

NOTE

Continue turning in the pressure bolt B (1) until the joint pin should been completely pushed out of the drive chain.

8) After the joint pin (3) is removed, loosen the pressure bolt B (1) and then pressure bolt A (4).

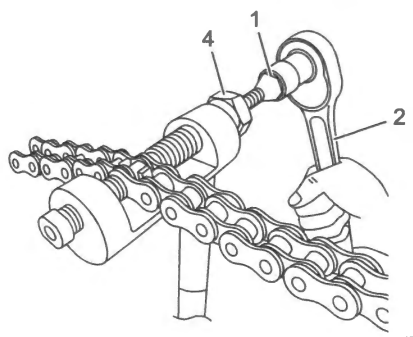

IF04K1310027-06

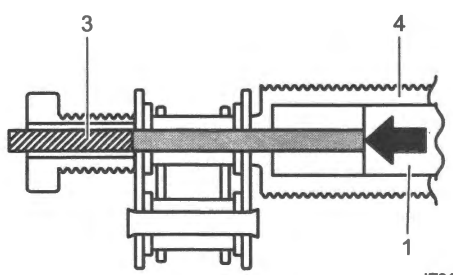

IE31J1310032-02

Drive Chain Connecting

⚠ WARNING

Do not use joint clip type of drive chain. The joint clip may have a chance to drop which may cause severe damage to motorcycle and severe injury.

Joint plate installation

1) Set up the special tool.

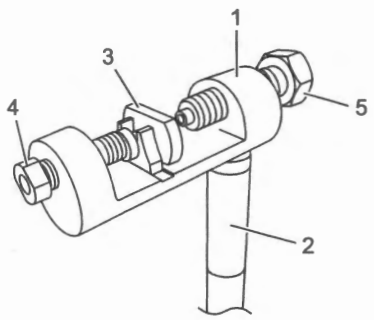

IF04K1310028-05

1. Tool body	4. Adjuster bolt
2. Grip handle	5. Pressure bolt A
3. Wedge holder	

2) Select the correct pressure holder (1) from table below, and set it to pressure bolt A (2).

Drive chain size / Type	Pressure holder
530 (50), 532 / Riveting type	F-50
520, 525 / Riveting type	F-520
530 (50), 532 / Clip type	C-50
520, 525 / Clip type	C-520

NOTE

In case joint plate is too large to fit on "520 pressure holder". Please select "50 pressure holder".

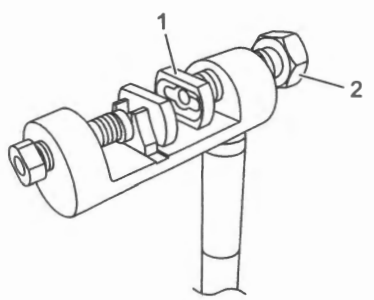

IF04K1310034-02

3) Connect both ends of the drive chain with the joint pins (1) inserted from the wheel side [a] as installed on the motorcycle.

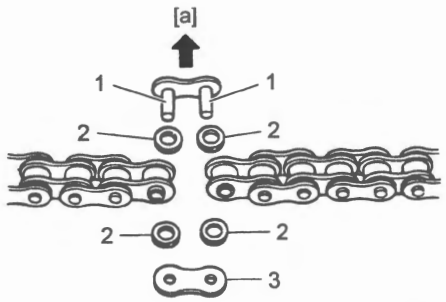

IF04K1310035-01

2. Seal ring	3. Joint plate

4) Apply grease on the recessed portion of the pressure holder (1). Then install the joint plate (2) on the tool, its stamp mark must face the pressure holder (1) side.

"A": Grease 99000–25011 (SUZUKI SUPER GREASE A)

5) Set the drive chain on the tool as illustrated and turn in the adjuster bolt (3) to secure the wedge holder (4) with joint pin.

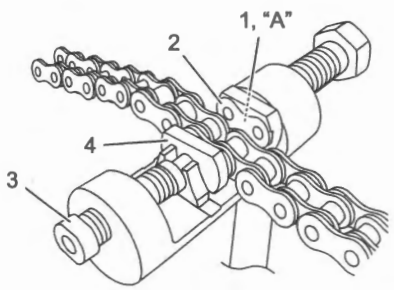

IF04K1310029-04

6) Turn in the pressure bolt A (1) and align two joint pins (2) properly with the respective holes of the joint plate (3).

7) Turn in the pressure bolt A (1) further using the wrench (4) to press the joint plate over the joint pins.

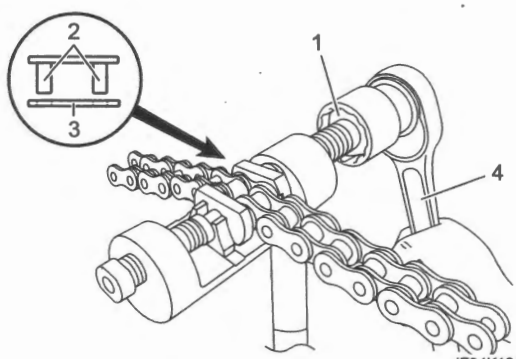

IF04K1310030-04

8) Continue pressing the joint plate until the distance "a" between the two joint plates come to the specification.

Joint plate distance specification
[Standard]: 18.6 – 18.9 mm (0.73 – 0.74 in)

NOTICE

If pressing of the joint plate makes the dimension out of specification excessively, the work must be carried out again by using new joint parts.

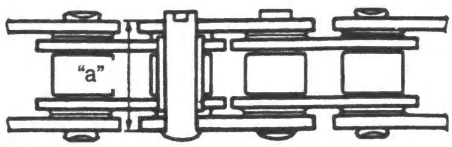

I649G1310033-03

Joint pin staking

1) Set up the special tool.

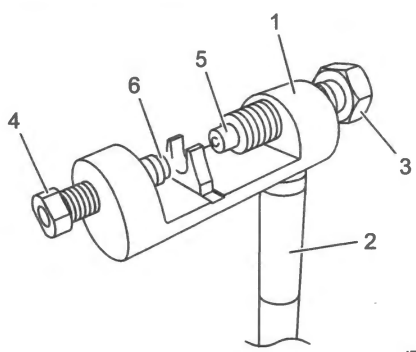

IF04K1310031-03

1. Tool body	4. Adjuster bolt
2. Grip handle	5. Flare pin
3. Pressure bolt A	6. Back-up pin

2) Apply grease to the flare pin (1).

"A": Grease 99000–25011 (SUZUKI SUPER GREASE A)

3) Stake the joint pin by turning (approximately 7/8 turn) the pressure bolt A (2) until the pin end diameter "a" becomes the specified dimension.

4) After joining of the drive chain has been completed, check to make sure that the link is smooth and no abnormal condition (no cracked joint pin, etc) is found.

Pin end diameter specification "a"
[Standard]: 5.45 – 5.85 mm (0.215 – 0.230 in)

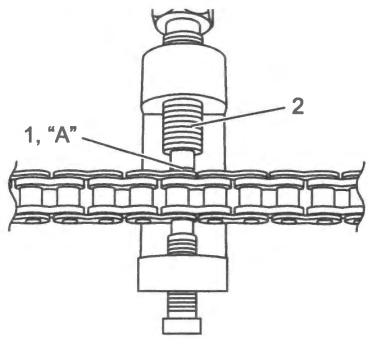

IF04K1310032-03

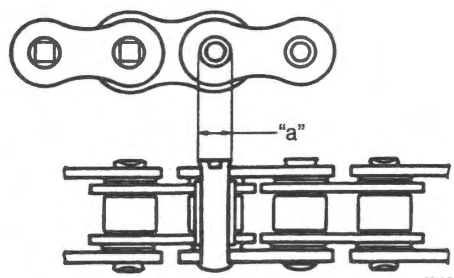

I649G1310036-03

5) Adjust the drive chain slack, after connecting it. Refer to "Drive Chain" in Section 0B (Page 0B-19).

Specifications

Tightening Torque Specifications

BENL06L23107001

Fastening part	Tightening torque			Note
	N·m	kgf-m	lbf-ft	
Engine sprocket nut	115	11.7	85.0	☞(Page 3A-4)
Engine sprocket cover bolt	10	1.0	7.5	☞(Page 3A-4)
Clutch release cylinder mounting bolt	10	1.0	7.5	☞(Page 3A-4)
Rear sprocket nut	60	6.1	44.5	☞(Page 3A-4)

Reference:
For the tightening torques of fasteners not specified in this page, refer to:
"Drive Chain Related Components" (Page 3A-1)
"Fasteners Information" in Section 0C (Page 0C-10)

Special Tools and Equipment

Recommended Service Material

BENL06L23108001

Material	SUZUKI recommended product or Specification		Note
Grease	SUZUKI SUPER GREASE A	P/No.: 99000–25011	☞(Page 3A-5) / ☞(Page 3A-7) / ☞(Page 3A-7) / ☞(Page 3A-9) / ☞(Page 3A-10)

NOTE

Required service material(s) is also described in:
"Drive Chain Related Components" (Page 3A-1)

Special Tool

BENL06L23108002

09913–50121
Oil seal remover
☞(Page 3A-6)



09913–70210
Bearing installer set
☞(Page 3A-7)



09921–20240
Bearing remover set
☞(Page 3A-6)

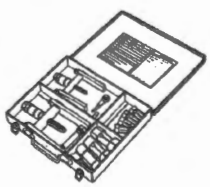

09922–22712
Drive chain cut / rivet tool set
☞(Page 3A-7)



09924–84510
Bearing installer set
☞(Page 3A-7)

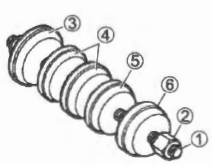

Section 4

Brakes

CONTENTS

Precautions 4-1
Precautions 4-1
Precautions for Brake System 4-1
Brake Fluid Information 4-1

Brake Control System and Diagnosis ... 4A-1
Diagnostic Information and Procedures 4A-1
Brake Symptom Diagnosis 4A-1
Repair Instructions 4A-2
Front Brake Hose Routing Diagram 4A-2
Rear Brake Hose Routing Diagram 4A-7
Front Brake Light Switch Inspection 4A-10
Rear Brake Light Switch Inspection 4A-10
Rear brake Light Switch Inspection and Adjustment 4A-10
Front Brake Light Switch Removal and Installation 4A-10
Rear Brake Light Switch Removal and Installation 4A-10
Brake Fluid Level Check 4A-11
Brake Hose Inspection 4A-11
Brake Pedal Height Inspection and Adjustment 4A-12
Air Bleeding from Brake Line 4A-12
Brake Fluid Replacement 4A-13
Front Brake Hose Removal and Installation 4A-13
Rear Brake Hose Removal and Installation 4A-13
Front Brake Master Cylinder Assembly / Brake Lever Components 4A-14
Front Brake Master Cylinder Assembly Removal and Installation 4A-14
Front Brake Master Cylinder Assembly / Brake Lever Disassembly and Reassembly ... 4A-15
Front Brake Master Cylinder Parts Inspection .. 4A-18
Rear Brake Master Cylinder Assembly Components 4A-19
Rear Brake Master Cylinder Assembly Removal and Installation 4A-20
Rear Brake Master Cylinder Disassembly and Assembly 4A-21
Rear Brake Master Cylinder Parts Inspection ... 4A-23
Specifications 4A-24
Tightening Torque Specifications 4A-24
Special Tools and Equipment 4A-24
Recommended Service Material 4A-24
Special Tool 4A-24

Front Brakes 4B-1
Repair Instructions 4B-1
Front Brake Components 4B-1
Front Brake Pad Inspection 4B-2
Front Brake Pad Replacement 4B-2
Front Brake Caliper Removal and Installation 4B-3
Front Brake Caliper Disassembly and Reassembly 4B-4
Front Brake Caliper Parts Inspection 4B-5
Front Brake Disc Removal and Installation 4B-5
Front Brake Disc Inspection 4B-6
Specifications 4B-6
Tightening Torque Specifications 4B-6
Special Tools and Equipment 4B-6
Recommended Service Material 4B-6

Rear Brakes 4C-1
Repair Instructions 4C-1
Rear Brake Components 4C-1
Rear Brake Pad Inspection 4C-2
Rear Brake Pad Replacement 4C-2
Rear Brake Caliper Removal and Installation 4C-3
Rear Brake Caliper Disassembly and Reassembly 4C-4
Rear Brake Caliper Parts Inspection 4C-6
Rear Brake Disc Removal and Installation 4C-7
Rear Brake Disc Inspection 4C-7
Specifications 4C-8
Tightening Torque Specifications 4C-8
Special Tools and Equipment 4C-8
Recommended Service Material 4C-8

ABS 4E-1
Precautions 4E-1
Precautions for ABS Service 4E-1
Precautions for Diagnosing Troubles 4E-1
Precautions for IMU 4E-1
General Description 4E-2
ABS Control Unit Calculating Process 4E-2
Self-diagnosis Function 4E-3
Schematic and Routing Diagram 4E-5
ABS Circuit Diagram 4E-5

Front Wheel Speed Sensor Routing Diagram..... 4E-7
Rear Wheel Speed Sensor Routing Diagram 4E-9
Component Location 4E-11
ABS Components Location 4E-11
Diagnostic Information and Procedures 4E-12
ABS Check..... 4E-12
DTC Check..... 4E-14
DTC Clearance 4E-16
ABS Hydraulic Unit Operation Check..... 4E-18
DTC Table..... 4E-19
Fail-Safe Table..... 4E-20
Scan Tool Data 4E-23
Visual Inspection..... 4E-25
ABS Symptom Diagnosis..... 4E-25
ABS Indicator Light Inspection..... 4E-25
Master Warning Indicator Light Inspection..... 4E-29
DTC C1625 (25)..... 4E-29
DTC C1635 (35)..... 4E-30
DTC C1641 (41)..... 4E-32
DTC C1642 (42)..... 4E-33
DTC C1644 (44)..... 4E-37
DTC C1645 (45)..... 4E-37
DTC C1647 (47) / C1648 (48)..... 4E-41
DTC C1649 (49) / C164A (4A)..... 4E-43
DTC C1655 (55)..... 4E-44
DTC C1661 (61)..... 4E-44
DTC C1671 (71)..... 4E-46
DTC C1672 (72)..... 4E-47
DTC C1681 (81)..... 4E-47
DTC C1682 (82)..... 4E-48
DTC C1683 (83)..... 4E-48
DTC U0073 (11)..... 4E-48
DTC U0100 (12)..... 4E-48
DTC U0123 (13)..... 4E-48
DTC U0155 (14)..... 4E-48
ABS Circuits Inspection (With motion track brake system)..... 4E-49
ABS Circuits Inspection (Without motion track brake system)..... 4E-50
ABS Control unit / HU Power Supply and Ground Circuit Check..... 4E-52
Repair Instructions 4E-54
ABS Control Unit Coupler Disconnect and Connect..... 4E-54
ABS Control Unit / HU Removal and Installation 4E-54
IMU Removal and Installation (If equipped)..... 4E-56
Front Wheel Speed Sensor Removal and Installation 4E-56
Rear Wheel Speed Sensor Removal and Installation 4E-57
Front Wheel Speed Sensor Rotor Removal and Installation 4E-57
Rear Wheel Speed Sensor Rotor Removal and Installation 4E-58
Wheel Speed Sensor and Sensor Rotor Inspection..... 4E-58
Specifications 4E-60
Tightening Torque Specifications..... 4E-60
Special Tools and Equipment 4E-60
Special Tool 4E-60

Precautions

Precautions

Precautions for Brake System

BENL06L24000001

Refer to "General Precautions" in Section 00 (Page 00-1) and "Precautions for Electrical Circuit Service" in Section 00 (Page 00-2).

Brake Fluid Information

BENL06L24000002

⚠ WARNING

- **This brake system is filled with an ethylene glycol-based DOT 3 or DOT 4 brake fluid. Do not use or mix different types of fluid, such as silicone-based or petroleum-based.**
- **Do not use any brake fluid taken from old, used or unsealed containers. Never reuse brake fluid left over from the last servicing or which has been stored for a long period of time.**
- **When storing brake fluid, seal the container completely and keep it away from children.**
- **When replenishing brake fluid, take care not to get dust into the fluid.**
- **When washing brake components, use new brake fluid. Never use cleaning solvent.**
- **A contaminated brake disc or brake pad reduces braking performance. Discard contaminated pads and clean the disc with high quality brake cleaner or neutral detergent.**
- **After removal and installation of the brake caliper, master cylinder, brake hose and ABS control unit/ HU (if equipped), be sure to carry out the air bleeding operation.**
- **Brake hose seal washers should be replaced with the new ones to prevent fluid leakage.**

NOTICE

The brake fluid is damaging to painted surfaces, plastics and rubber materials, and do not allow the fluid to spill on the surrounding parts.
If the fluid is spilled, flush it with water immediately.

Brake Control System and Diagnosis

Diagnostic Information and Procedures

Brake Symptom Diagnosis

BENL06L24104001

Condition	Possible cause	Correction / Reference Item
Insufficient brake power	Leakage of brake fluid from hydraulic system.	*Repair or replace. ☞(Page 0B-23)*
	Worn pads.	*Replace. ☞(Page 4B-2) ☞(Page 4C-2)*
	Oil adhesion on friction surface of pads.	*Clean disc and pads.*
	Worn disc.	*Replace. ☞(Page 4B-5) ☞(Page 4C-7)*
	Air in hydraulic system.	*Bleed air. ☞(Page 4A-12)*
	Not enough brake fluid in the reservoir.	*Replenish. ☞(Page 0B-23)*
	Excessive brake pedal play.	*Adjust. ☞(Page 0B-20)*
Brake squeaking	Carbon adhesion on pad surface.	*Repair surface with sandpaper.*
	Tilted pad.	*Correct pad fitting or replace. ☞(Page 4B-2) ☞(Page 4C-2)*
	Damaged wheel bearing.	*Replace. ☞(Page 2D-7) ☞(Page 2D-14)*
	Loose front wheel axle or rear wheel axle.	*Tighten to specified torque.*
	Worn pads.	*Replace. ☞(Page 4B-2) ☞(Page 4C-2)*
	Foreign material in brake fluid.	*Replace brake fluid. ☞(Page 0B-23)*
	Clogged return port of master cylinder.	*Disassemble and clean master cylinder.*
	Worn disc.	*Replace. ☞(Page 4B-5) ☞(Page 4C-7)*
Excessive brake lever or brake pedal stroke	Air in hydraulic system.	*Bleed air. ☞(Page 4A-12)*
	Insufficient brake fluid.	*Replenish fluid to specified level. ☞(Page 0B-23)*
	Improper quality of brake fluid.	*Replace with correct fluid. ☞(Page 0B-23)*
Leakage of brake fluid	Insufficient tightening of connection joints.	*Tighten to specified torque.*
	Cracked hose.	*Replace. ☞(Page 0B-23)*
	Worn piston and/or cup.	*Replace piston and/or cup. ☞(Page 4A-15) ☞(Page 4A-21)*
	Worn piston seal and dust seal.	*Replace piston seal and dust seal. ☞(Page 4B-4) ☞(Page 4C-4)*
Brake drags	Rusty part.	*Clean and lubricate. ☞(Page 0B-31)*
	Insufficient brake lever or brake pedal pivot lubrication.	*Lubricate. ☞(Page 0B-31)*

Repair Instructions

Front Brake Hose Routing Diagram

BENL06L24106001

Without Motion Track Brake System

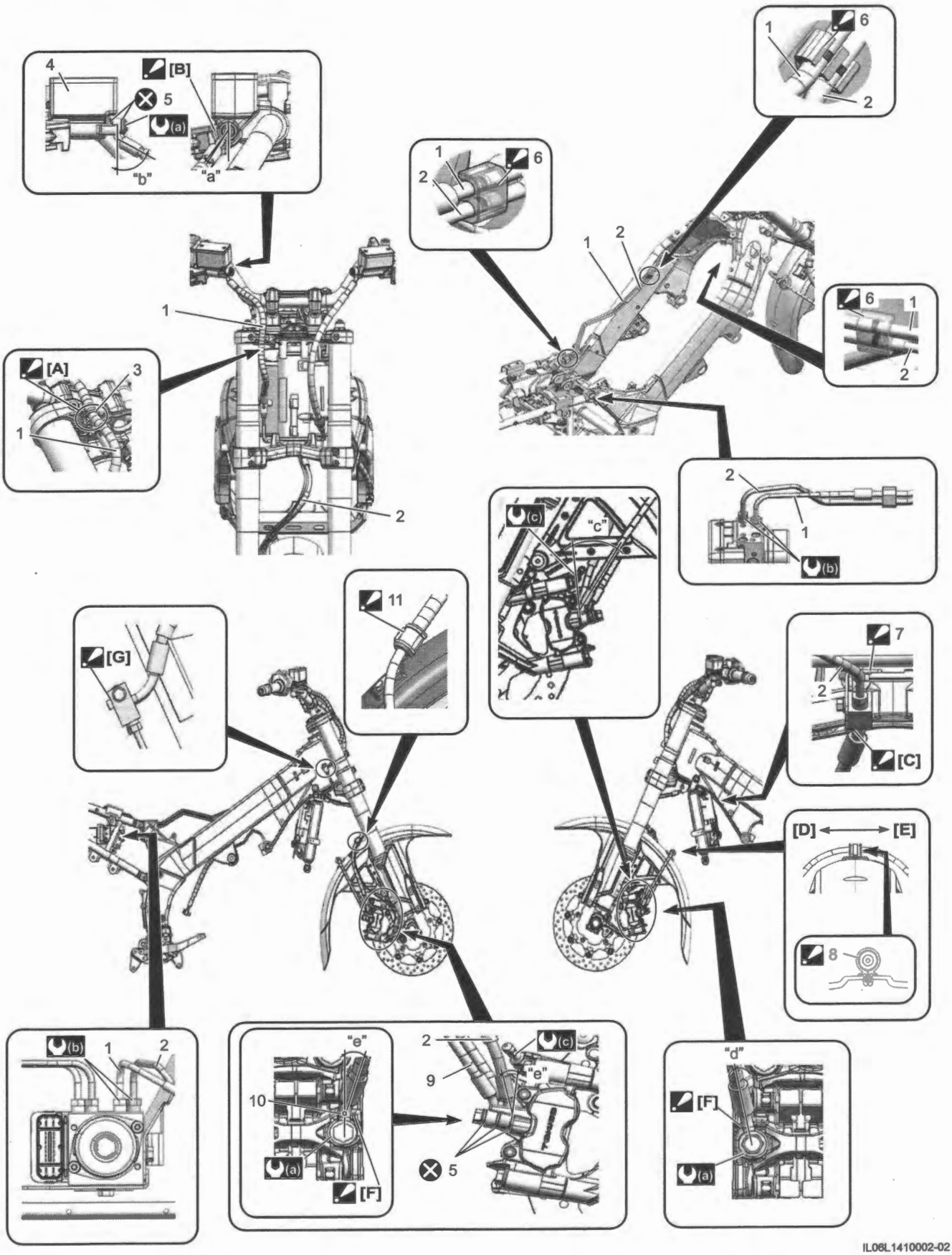

IL06L1410002-02

[A]: Pass the brake hose as shown in figure.	3. Brake hose guide	(a) : 23 N·m (2.3 kgf-m, 17.0 lbf-ft)
[B]: After the brake hose union has contacted the stopper of the master cylinder, tighten the union bolt to the specified torque.	4. Front brake master cylinder	(b) : 16 N·m (1.6 kgf-m, 12.0 lbf-ft)
[C]: After the brake hose union has contacted the stopper of the clamp, tighten the union bolt to the specified torque.	5. Seal washer	(c) : 7.5 N·m (0.76 kgf-m, 5.55 lbf-ft)
[D]: Left side	6. Clamp : Clamp to the marking position of brake pipes.	"a": 10°
[E]: Right side	7. Clamp : After the brake hose has contacted the stopper of the frame, tighten the union bolt to the specified torque.	"b": 55°
[F]: After the brake hose union has contacted the stopper of the caliper, tighten the union bolt to the specified torque.	8. Clamp : Insert the clamp end into the hole of the front fender.	"c": 40°
[G]: After the brake hose has contacted the stopper of the frame, tighten the union bolt to the specified torque.	9. Front brake hose (right front brake caliper to left front brake caliper)	"d": 0°
1. Front brake hose (master cylinder to ABS control unit/HU)	10. Paint mark (blue)	"e": 20°
2. Front brake hose (ABS control unit/HU to front brake caliper)	11. Clamp : Fix the hose sleeve to the clamp.	: Do not reuse.

With Motion Track Brake System

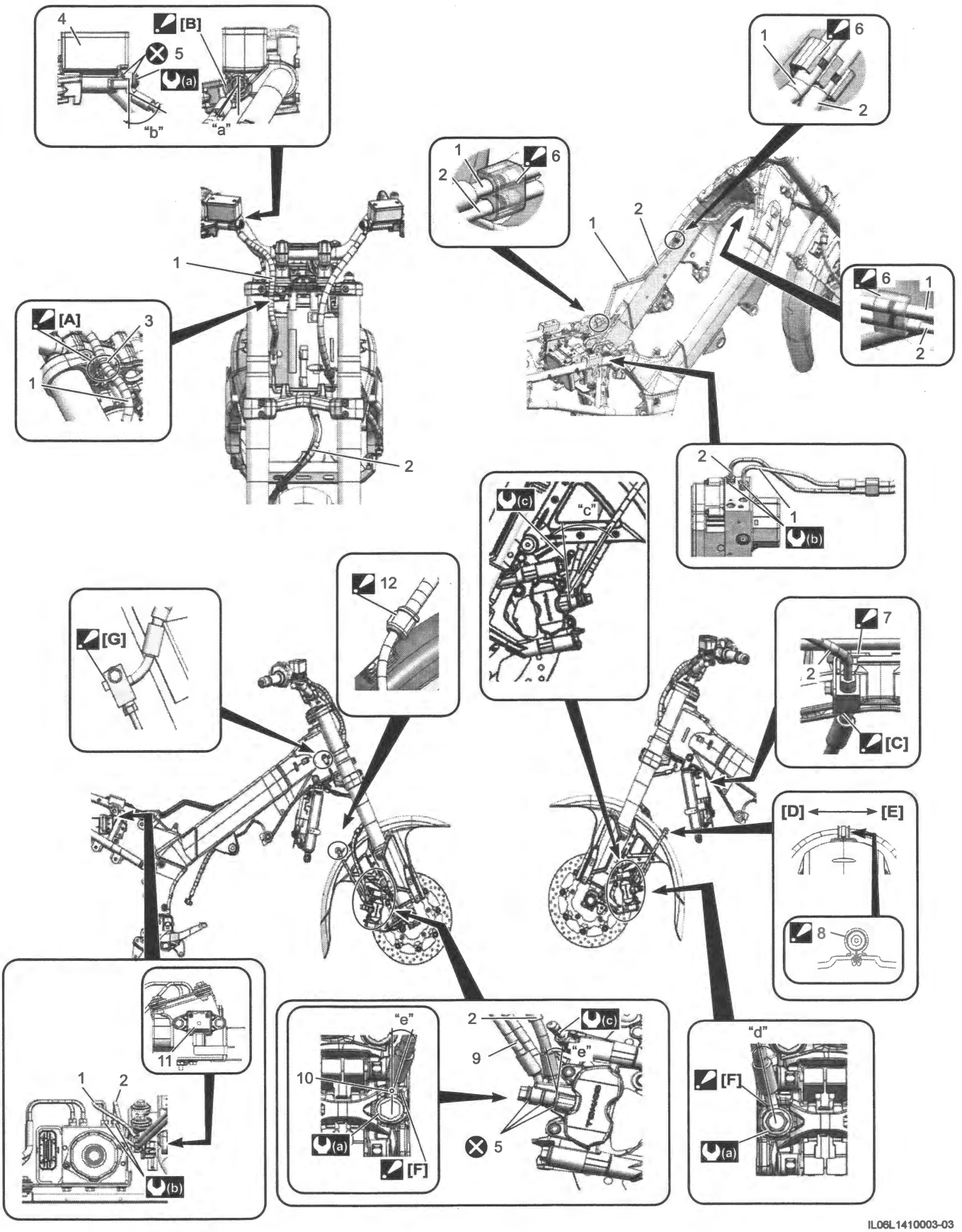

IL06L1410003-03

[A]: Pass the brake hose as shown in figure.	4. Front brake master cylinder	(b) : 16 N·m (1.6 kgf-m, 12.0 lbf-ft)
[B]: After the brake hose union has contacted the stopper of the master cylinder, tighten the union bolt to the specified torque.	5. Seal washer	(c) : 7.5 N·m (0.76 kgf-m, 5.55 lbf-ft)
[C]: After the brake hose has contacted the stopper of the clamp, tighten the union bolt to the specified torque.	6. Clamp : Clamp to the marking position of brake pipes.	"a": 10°
[D]: Left side	7. Clamp : After the brake hose has contacted the stopper of the frame, tighten the union bolt to the specified torque.	"b": 55°
[E]: Right side	8. Clamp : Insert the clamp end into the hole of the front fender.	"c": 40°
[F]: After the brake hose union has contacted the stopper of the caliper, tighten the union bolt to the specified torque.	9. Front brake hose (right front brake caliper to left front brake caliper)	"d": 0°
[G]: After the brake hose has contacted the stopper of the frame, tighten the union bolt to the specified torque.	10. Paint mark (blue)	"e": 20°
1. Front brake hose (master cylinder to ABS control unit/HU)	11. Inertial sensor	⊗ : Do not reuse.
2. Front brake hose (ABS control unit/HU to front brake caliper)	12. Clamp : Fix the hose sleeve to the clamp.	
3. Brake hose guide	(a) : 23 N·m (2.3 kgf-m, 17.0 lbf-ft)	

Rear Brake Hose Routing Diagram

BENL06L24106002

Without Motion Track Brake System

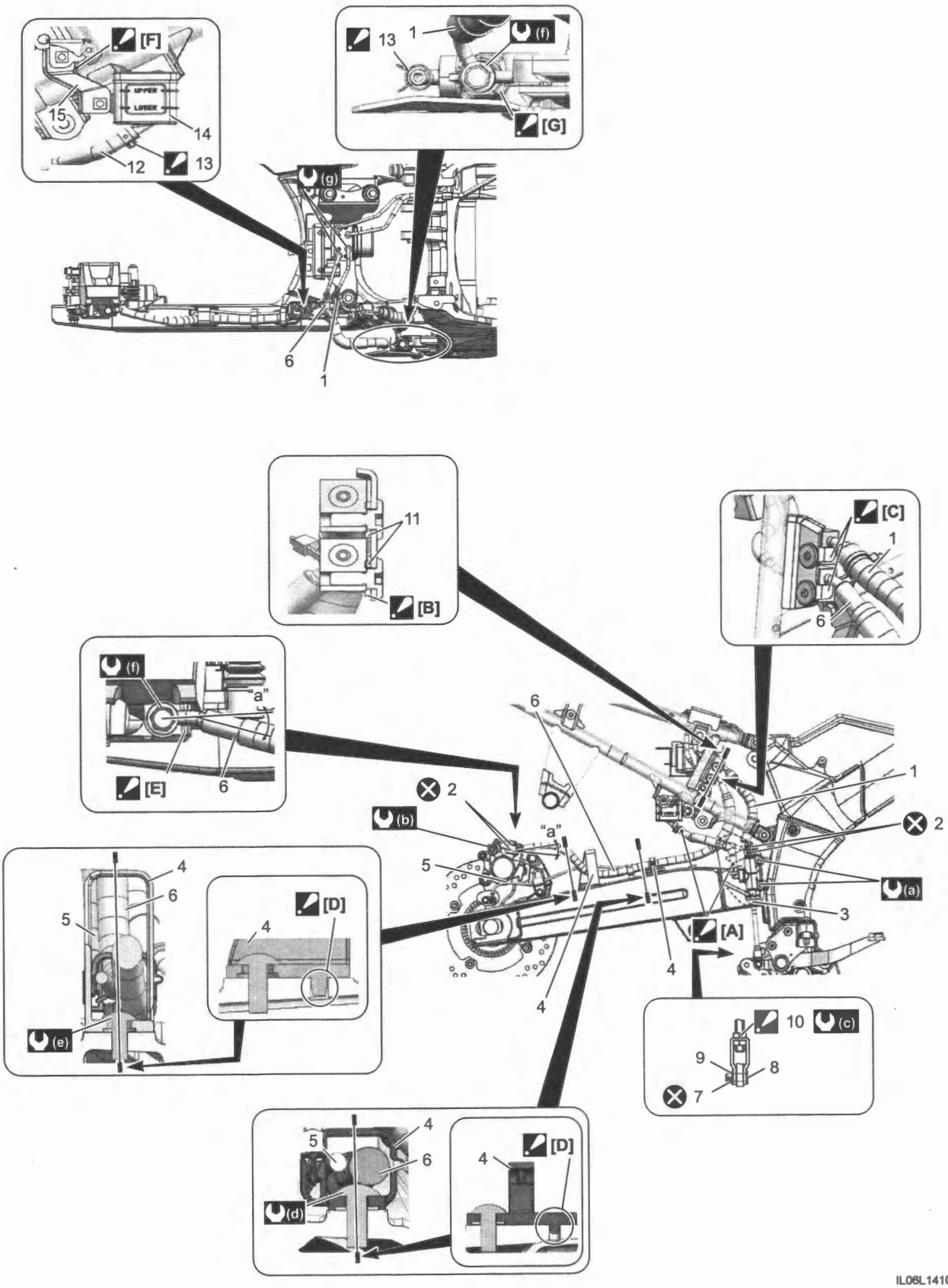

IL06L1410004-02

[A]: Face the yellow paint mark outside.	5. Rear wheel speed sensor lead wire	"a": 21°
[B]: Adhere the cushion to brake hose joint.	6. Rear brake hose (ABS control unit/HU to brake caliper)	(a) : 10 N·m (1.0 kgf-m, 7.5 lbf-ft)
[C]: After the brake hose joint has contacted the stopper of bracket, tighten the union bolt to the specified torque.	7. Cotter pin	(b) : 7.5 N·m (0.76 kgf-m, 5.55 lbf-ft)
[D]: After the projection has install the hole of swingarm, tighten the bolt to the specified torque.	8. Pin	(c) : 17 N·m (1.7 kgf-m, 12.5 lbf-ft)
[E]: After the brake hose union has contacted the stopper of caliper, tighten the union bolt to the specified torque.	9. Washer	(d) : 5 N·m (0.51 kgf-m, 3.70 lbf-ft)
[F]: After the rear reservoir tank bracket has contacted the stopper of bracket, tighten the bolt to the specified torque.	10. Rear brake master cylinder rod lock-nut : Tighten the rear brake master clinder rod lock-nut while holding the yoke.	(e) : 3.5 N·m (0.36 kgf-m, 2.60 lbf-ft)
[G]: After the brake hose union has contacted the stopper of master cylinder, tighten the union bolt to the specified torque.	11. Cushion	(f) : 23 N·m (2.3 kgf-m, 17.0 lbf-ft)
1. Rear brake hose (rear brake master cylinder to ABS control unit/HU)	12. Rear reservoir tank hose	(g) : 16 N·m (1.6 kgf-m, 12.0 lbf-ft)
2. Seal washer	13. Clamp : Assemble the clamp in the direction as shown in figure.	: Do not reuse.
3. Rear brake master cylinder	14. Rear reservoir tank	
4. Brake hose guide	15. Rear reservoir tank bracket	

With Motion Track Brake System

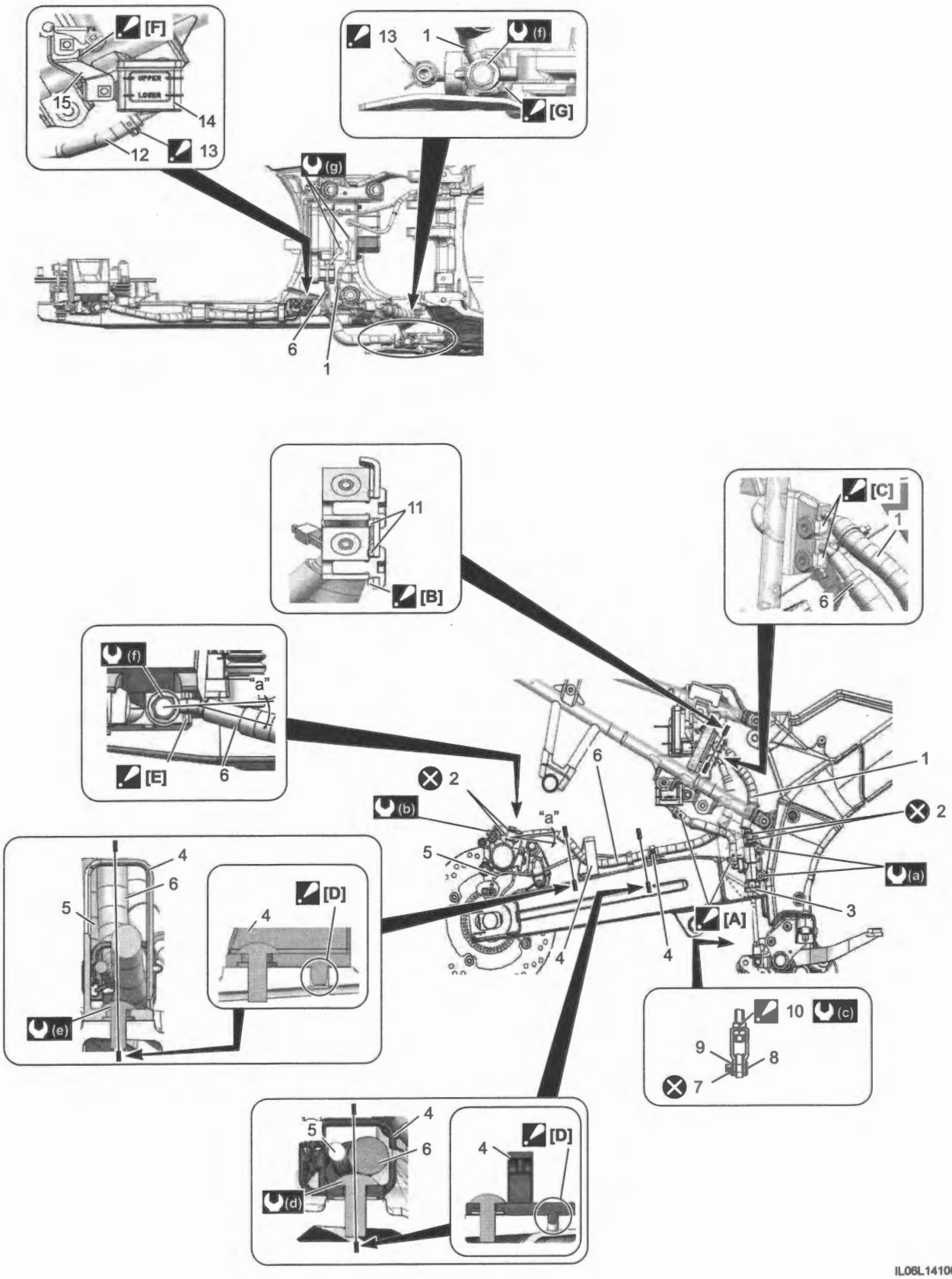

IL06L1410063-02

[A]: Face the yellow paint mark outside.	5. Rear wheel speed sensor lead wire	"a": 21°
[B]: Adhere the cushion to brake hose joint.	6. Rear brake hose (ABS control unit/HU to brake caliper)	(a) : 10 N·m (1.0 kgf-m, 7.5 lbf-ft)
[C]: After the brake hose joint has contacted the stopper of bracket, tighten the union bolt to the specified torque.	7. Cotter pin	(b) : 7.5 N·m (0.76 kgf-m, 5.55 lbf-ft)
[D]: After the projection has install the hole of swingarm, tighten the bolt to the specified torque.	8. Pin	(c) : 17 N·m (1.7 kgf-m, 12.5 lbf-ft)
[E]: After the brake hose union has contacted the stopper of caliper, tighten the union bolt to the specified torque.	9. Washer	(d) : 5 N·m (0.51 kgf-m, 3.70 lbf-ft)
[F]: After the rear reservoir tank bracket has contacted the stopper of bracket, tighten the bolt to the specified torque.	10. Rear brake master cylinder rod lock-nut : Tighten the rear brake master clinder rod lock-nut while holding the yoke.	(e) : 3.5 N·m (0.36 kgf-m, 2.60 lbf-ft)
[G]: After the brake hose union has contacted the stopper of master cylinder, tighten the union bolt to the specified torque.	11. Cushion	(f) : 23 N·m (2.3 kgf-m, 17.0 lbf-ft)
1. Rear brake hose (rear brake master cylinder to ABS control unit/HU)	12. Rear reservoir tank hose	(g) : 16 N·m (1.6 kgf-m, 12.0 lbf-ft)
2. Seal washer	13. Clamp : Assemble the clamp in the direction as shown in figure.	⊗ : Do not reuse.
3. Rear brake master cylinder	14. Rear reservoir tank	
4. Brake hose guide	15. Rear reservoir tank bracket	

Front Brake Light Switch Inspection

BENL06L24106003

Refer to "Brakes" in Section 0B (Page 0B-20).

Rear Brake Light Switch Inspection

BENL06L24106004

Refer to "Brakes" in Section 0B (Page 0B-20).

Rear brake Light Switch Inspection and Adjustment

BENL06L24106005

Check the rear brake light switch so that the brake light will come on just before pressure is felt when the brake pedal is depressed. If the brake light switch adjustment is necessary, turn the adjuster nut (1) in or out while holding the brake pedal.

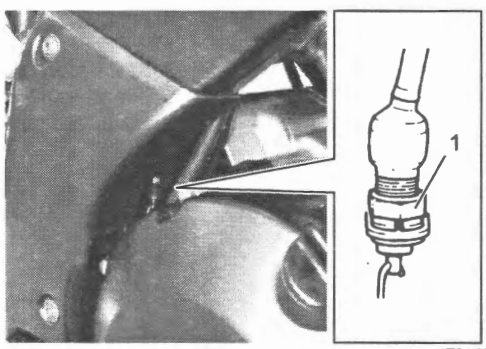

IE31J1410006-01

Front Brake Light Switch Removal and Installation

BENL06L24106006

Refer to "Front Brake Master Cylinder Assembly / Brake Lever Disassembly and Reassembly" (Page 4A-15).

Rear Brake Light Switch Removal and Installation

BENL06L24106007

Removal

1) Remove the frame front cover (RH). ☞(Page 9D-30)
2) Disconnect the rear brake light switch coupler (1).

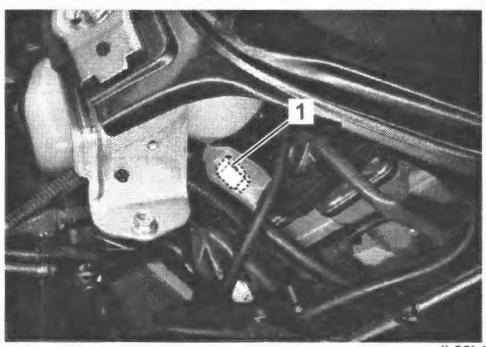

IL06L1020043-01

3) Remove the front footrest bracket bolts (1) and rear brake light switch spring (2) from the front footrest (3).

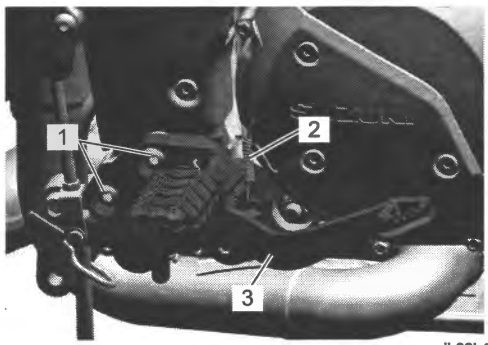

IL06L1410072-01

4) Remove the rear brake master cylinder mounting bolts (1).

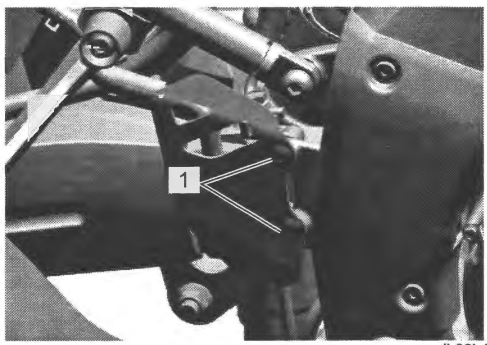

IL06L1410073-01

5) Remove the rear brake light switch (1).

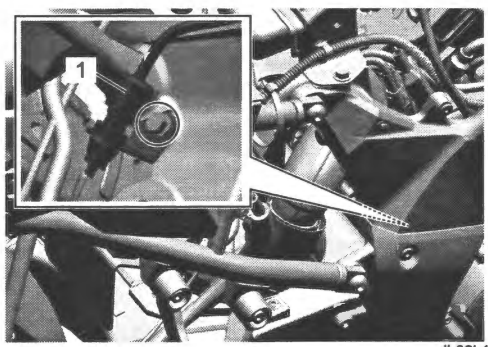

IL06L1410074-01

Installation

Install the rear brake light switch in the reverse order of removal. Pay attention to the following points:

- Tighten the rear brake master cylinder mounting bolts (1) to the specified torque.

  Tightening torque
  Rear brake master cylinder mounting bolt (a): 10 N·m (1.0 kgf-m, 7.5 lbf-ft)

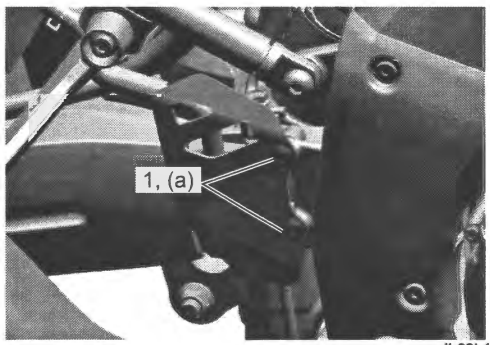

IL06L1410075-01

- Tighten the front footrest bracket bolts (1) to the specified torque.

  Tightening torque
  Front footrest bracket bolt (a): 26 N·m (2.7 kgf-m, 19.5 lbf-ft)

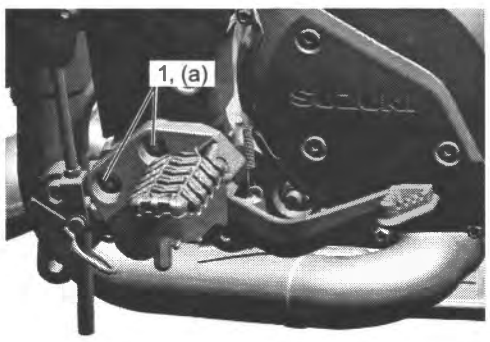

IL06L1410076-01

- Inspect the rear brake light switch. ☞(Page 4A-10)

Brake Fluid Level Check

BENL06L24106008

Refer to "Brake Fluid" in Section 0B (Page 0B-23).

Brake Hose Inspection

BENL06L24106009

Refer to "Brake Hose" in Section 0B (Page 0B-23).

Brake Pedal Height Inspection and Adjustment

BENL06L24106010

Refer to "Brakes" in Section 0B (Page 0B-20).

Air Bleeding from Brake Line

BENL06L24106011

Air trapped in the brake lines acts like a cushion to absorb a large proportion of the pressure developed by the master cylinder and thus greatly reduces the braking force. The presence of air bubbles is indicated by a "spongy" feel in the brake lever and low braking force. This condition is extremely dangerous, and therefore the air must be bled every time after replacing any parts in the brake lines in the following manner.

NOTE

It is essential to purge air from the fluid circuit before inspecting the function of the brake fluid pressure-decreasing mode. Without air bleeding, trapped air in the circuit will enter the HU.

Front Brake

1) Place the motorcycle on a level surface and keep the handlebar straight.
2) Set the brake lever adjuster (1) to 3rd position.

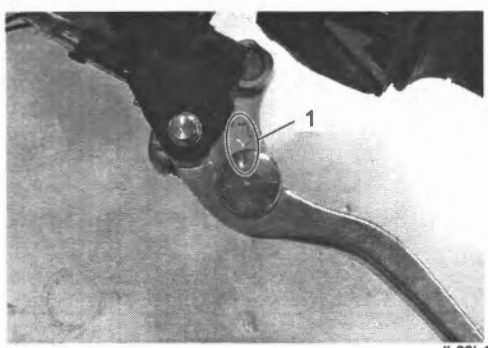

IL06L1410024-02

3) Remove the reservoir cap (1) and diaphragm from the master cylinder body.
4) Fill the master cylinder reservoir with new brake fluid to the top of the inspection window (2). Place the reservoir cap to prevent dirt from entering.

Brake fluid (DOT 4)

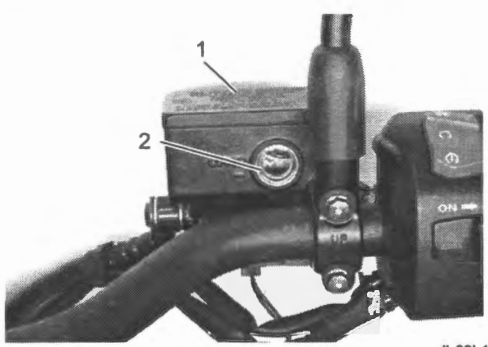

IL06L1410064-01

5) Attach a clear hose to the air bleeder valve, and insert the free end of the hose into a receptacle.
6) Operate the brake lever several times and, while holding the lever gripped, loosen the air bleeder valve (1) and drain the brake fluid into a receptacle.

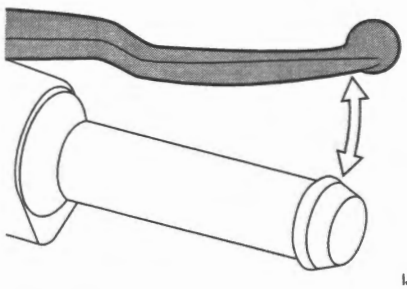

IJ27K1410061-01

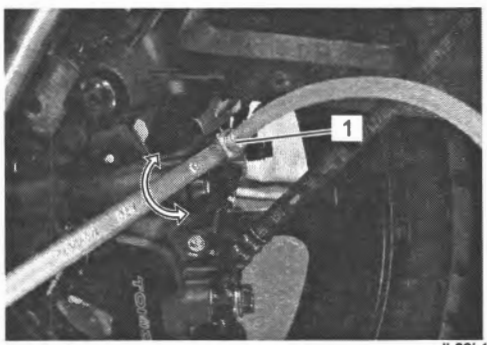

IL06L1410026-01

7) Tighten the air bleeder valve and release the brake lever slowly.
8) Repeat the steps 4) and 5) until the fluid is flowing out without bubbles.

NOTE

While bleeding the brake system, replenish the reservoir with the brake fluid as necessary to keep the fluid above the lower level.

9) Tighten the air bleeder valve to the specified torque.

Tightening torque
Brake air bleeder valve: 7.5 N·m (0.76 kgf-m, 5.55 lbf-ft)

10) Fill the reservoir with brake fluid to the upper line (1) of the reservoir.

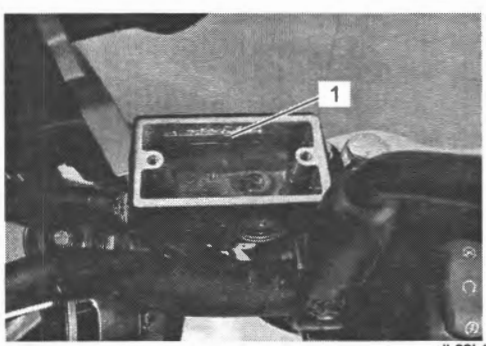

IL06L1410027-01

11) Install the reservoir cap and diaphragm to the master cylinder.
12) Tighten the reservoir cap screws to the specified torque.

Tightening torque
Front reservoir cap screw: 1.5 N·m (0.15 kgf-m, 1.10 lbf-ft)

Rear Brake
Bleed air from the rear brake system as the same manner of front brake.

NOTE

The only difference of bleeding operation from the front brake is that the rear master cylinder is actuated by a pedal.


IL06L1410065-01

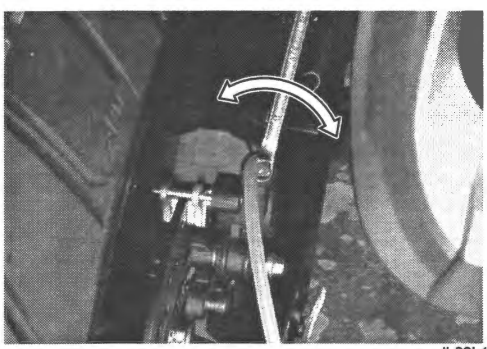
IL06L1410029-02

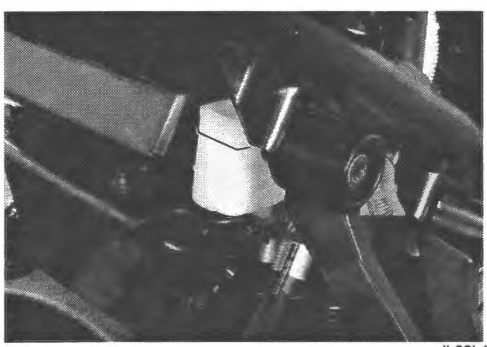
IL06L1410030-01

Install the frame front cover. ☞(Page 9D-30)

Brake Fluid Replacement

BENL06L24106012

Refer to "Brake Fluid" in Section 0B (Page 0B-23).

Front Brake Hose Removal and Installation

BENL06L24106013

Refer to "Brake Hose" in Section 0B (Page 0B-23).

Rear Brake Hose Removal and Installation

BENL06L24106014

Refer to "Brake Hose" in Section 0B (Page 0B-23).

Front Brake Master Cylinder Assembly / Brake Lever Components

BENL06L24106015

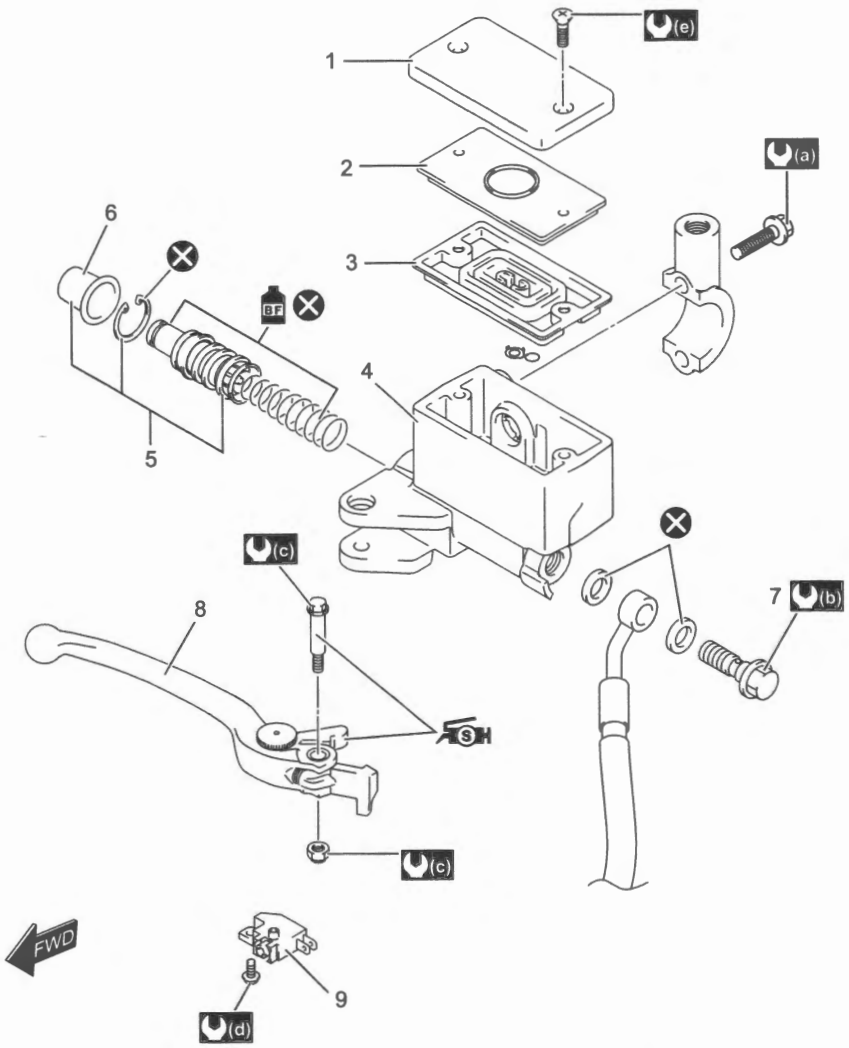

IL06L1410035-01

1. Reservoir cap	7. Brake hose union bolt	(d) : 1.2 N·m (0.12 kgf-m, 0.90 lbf-ft)
2. Plate	8. Brake lever	(e) : 1.5 N·m (0.15 kgf-m, 1.10 lbf-ft)
3. Diaphragm	9. Brake light switch	S : Apply silicone grease.
4. Master cylinder	(a) : 10 N·m (1.0 kgf-m, 7.5 lbf-ft)	BF : Apply brake fluid.
5. Piston/Cup set	(b) : 23 N·m (2.3 kgf-m, 17.0 lbf-ft)	: Do not reuse.
6. Dust boot	(c) : 5.9 N·m (0.60 kgf-m, 4.35 lbf-ft)	

Front Brake Master Cylinder Assembly Removal and Installation

BENL06L24106016

Removal

1) Drain brake fluid. ☞(Page 0B-23)
2) Remove the right rear view mirror (1).
3) Disconnect the front brake light switch lead wire coupler (2).
4) Place a rag underneath the brake hose union bolt (3) on the master cylinder to catch any spilt brake fluid.
5) Remove the brake hose union bolt (3) and disconnect the brake hose.
6) Remove the master cylinder assembly (4) by removing the bolts.

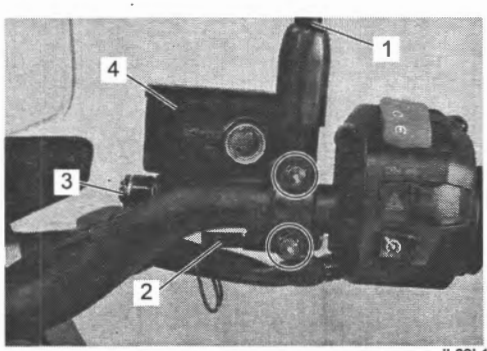

IL06L1410037-01

Installation

1) When installing the master cylinder assembly (1) onto the handlebar (2), align the edge of master cylinder holder's (3) with the punch mark (4) on the handlebar (2) and tighten the upper mounting bolt (5) first.

NOTE

Face the up mark (6) upward.

Tightening torque
Front brake master cylinder mounting bolt (a): 10 N·m (1.0 kgf-m, 7.5 lbf-ft)

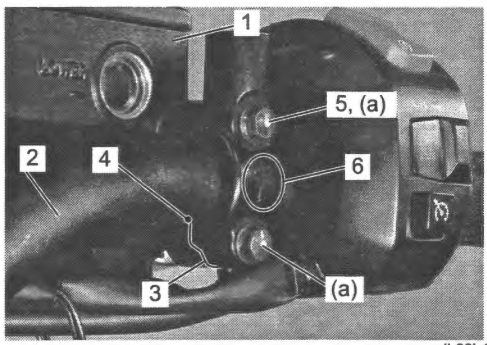

IL06L1410038-01

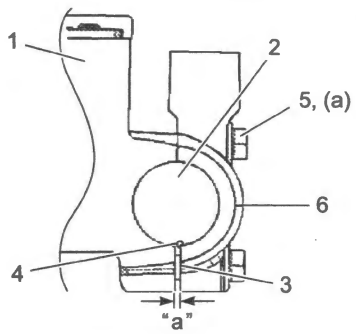

IE31J1410032-01

"a": Clearance

2) Install the brake hose union bolt and new seal washers to brake hose.
3) After setting the brake hose union (1) to the stopper (2) of the master cylinder, tighten the union bolt (3) to the specified torque.

Tightening torque
Brake hose union bolt (a): 23 N·m (2.3 kgf-m, 17.0 lbf-ft)

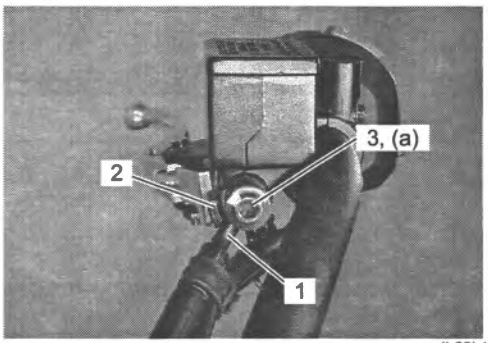

IL06L1410039-01

4) Connect the front brake light switch lead wire coupler to the front brake light switch.
5) Install the right rear view mirror to the master cylinder holder. ☞(Page 6B-3)
6) Bleed air from the brake system. ☞(Page 4A-12)

Front Brake Master Cylinder Assembly / Brake Lever Disassembly and Reassembly

BENL06L24106017

Refer to "Front Brake Master Cylinder Assembly Removal and Installation" (Page 4A-14).

Disassembly

1) Remove the reservoir cap (1), plate (2) and diaphragm (3).

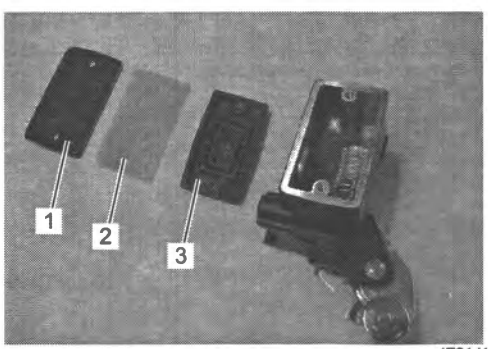

IE31J1410034-01

2) Remove the brake lever (1) and brake light switch (2).

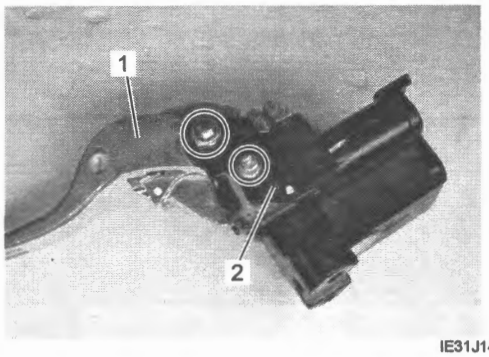

IE31J1410035-01

3) Pull out the dust boot (1) and remove the snap ring (2) with the special tool.

Special tool
09900–06108

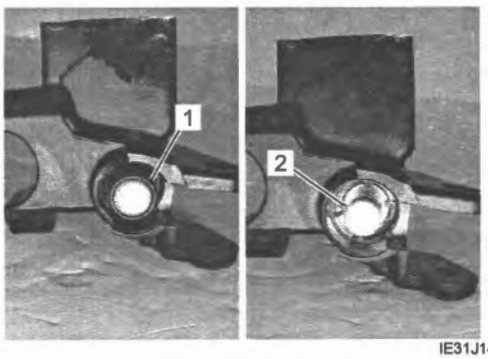

IE31J1410036-01

4) Remove the following parts from the master cylinder.
- Piston/secondary cup set (1)
- Primary cup (2)
- Return spring (3)

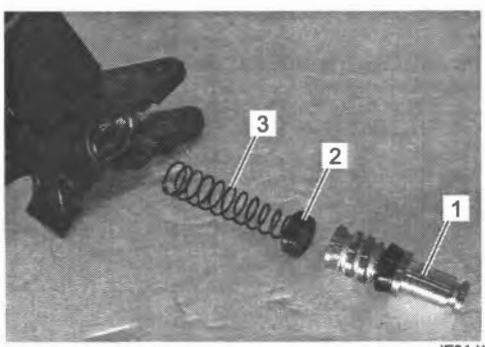

IE31J1410037-01

Reassembly

1) Install the new primary cup (1) to the return spring (2).

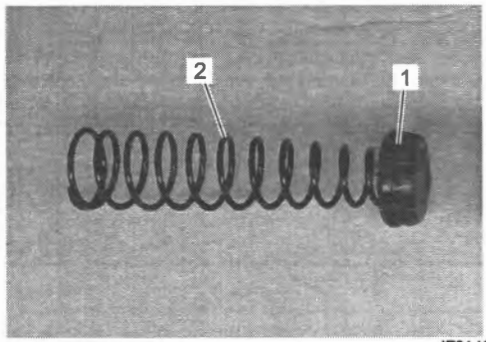

IE31J1410038-01

NOTICE

- **Wash the master cylinder components with new brake fluid before reassembly.**
- **Do not wipe the brake fluid off after washing the components.**
- **When washing the components, use the specified brake fluid. Never use different types of fluid or cleaning solvents such as gasoline, kerosine, etc.**
- **Apply brake fluid to the master cylinder bore and all of the master cylinder component to be inserted into the bore.**

Brake fluid (DOT 4)



I649G1410024-02

2) Install the primary cup/spring (1) and new secondary cup/piston (2) to the master cylinder.

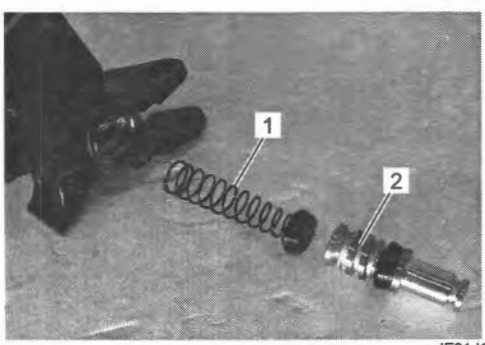

IE31J1410039-01

3) Install the new snap ring (1) with the special tool.

Special tool
09900–06108

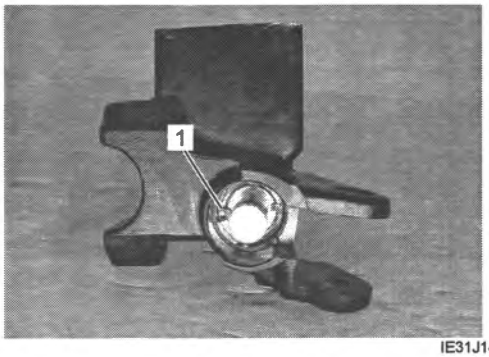

IE31J1410040-01

4) Set the dust boot (1) to the master cylinder securely.

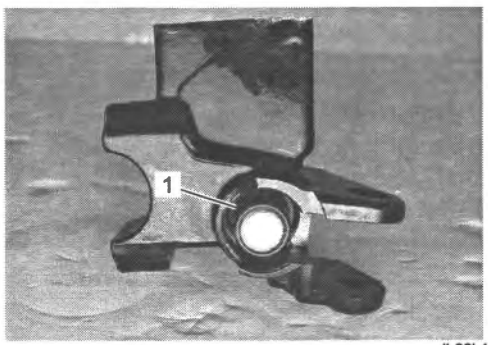

IL06L1410043-01

5) When installing the brake light switch, align the projection (1) on the switch with the hole (2) in the master cylinder.

6) Tighten the brake light switch mounting screw to the specified torque.

Tightening torque
Brake light switch screw: 1.2 N·m (0.12 kgf-m, 0.90 lbf-ft)

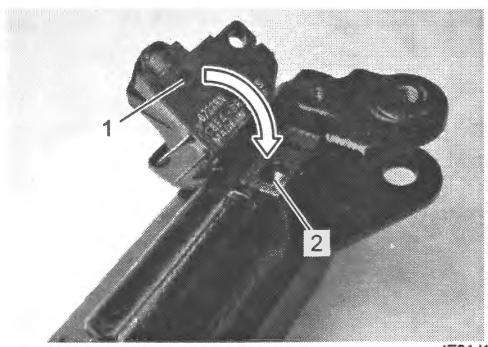

IE31J1410042-02

7) Apply grease to the brake lever pivot bolt.

8) Apply grease to the contact point between piston and brake lever.

"A": Grease 99000–25100 (SUZUKI SILICONE GREASE)

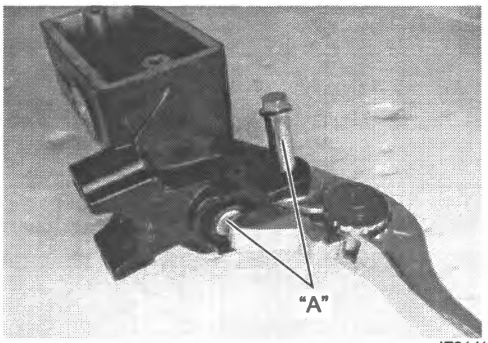

IE31J1410043-01

9) Tighten the pivot bolt (1) and lock-nut (2) to the specified torque.

Tightening torque
Brake lever pivot bolt (a): 5.9 N·m (0.6 kgf-m, 4.35 lbf-ft)
Brake lever pivot bolt lock-nut (b): 5.9 N·m (0.6 kgf-m, 4.35 lbf-ft)

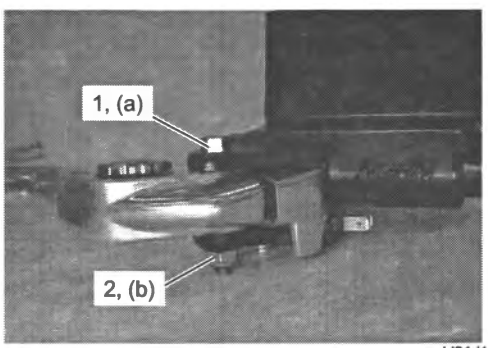

IJ31J1410004-01

10) Install the diaphragm, plate and reservoir cap to the master cylinder.

11) Tighten the reservoir cap screws to the specified torque.

Tightening torque
Front reservoir cap screw: 1.5 N·m (0.15 kgf-m, 1.10 lbf-ft)

Front Brake Master Cylinder Parts Inspection

BENL06L24106018

Refer to "Front Brake Master Cylinder Assembly / Brake Lever Disassembly and Reassembly" (Page 4A-15).

Master Cylinder

Inspect the master cylinder bore (1) for any scratches or other damage. If any damage is found, replace the master cylinder with a new one.

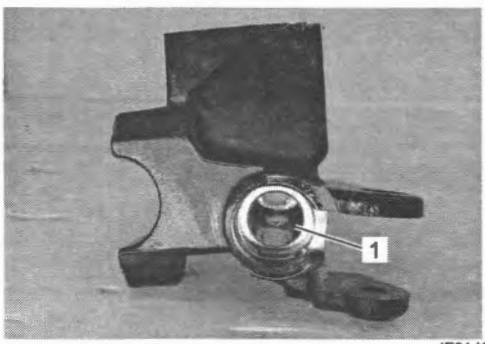

IE31J1410045-01

Piston

Inspect the piston surface for any scratches or other damage. If any damage is found, replace it with a new one.

Rubber Parts

Inspect the primary cup (1), secondary cup (2) and dust boot (3) for wear or damage. If any damage is found, replace them with new ones.

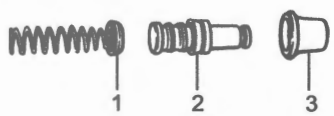

IE31J1410046-01

Rear Brake Master Cylinder Assembly Components

BENL06L24106019

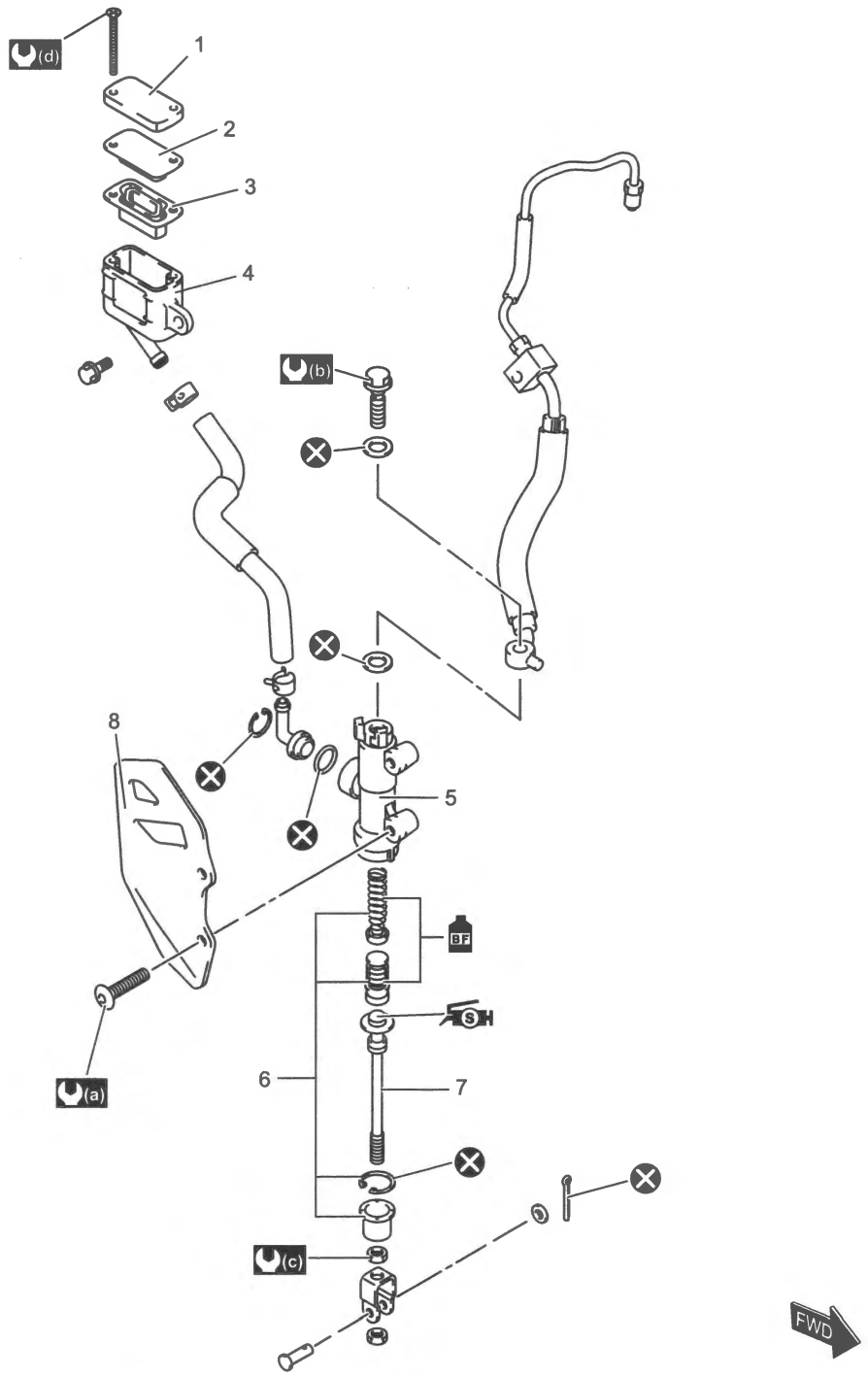

IL06L1410070-02

1. Reservoir cap	5. Master cylinder	(a) : 10 N·m (1.0 kgf-m, 7.5 lbf-ft)	SH : Apply silicone grease.
2. Plate	6. Piston/Cup set	(b) : 23 N·m (2.3 kgf-m, 17.0 lbf-ft)	BF : Apply brake fluid.
3. Diaphragm	7. Push rod	(c) : 17 N·m (1.7 kgf-m, 12.5 lbf-ft)	⊗ : Do not reuse.
4. Reservoir tank	8. Cover	(d) : 1.5 N·m (0.15 kgf-m, 1.10 lbf-ft)	

Rear Brake Master Cylinder Assembly Removal and Installation

BENL06L24106020

Removal

1) Drain brake fluid. ☞(Page 0B-23)
2) Remove the reservoir tank mounting bolt (1) from the reservoir tank bracket.

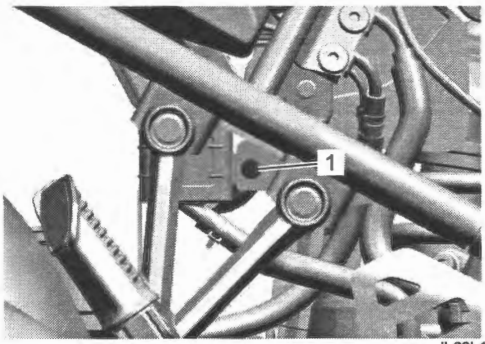

IL06L1410066-01

3) Place a clean rag underneath the brake hose union bolt (1) on the master cylinder to catch any spilt brake fluid.
4) Remove the brake hose union bolt (1) and disconnect the brake hose from the master cylinder.
5) Loosen the lock-nut (2).
6) Remove the master cylinder mounting bolts (3).
7) Remove the master cylinder with the reservoir by turning the push rod (4).

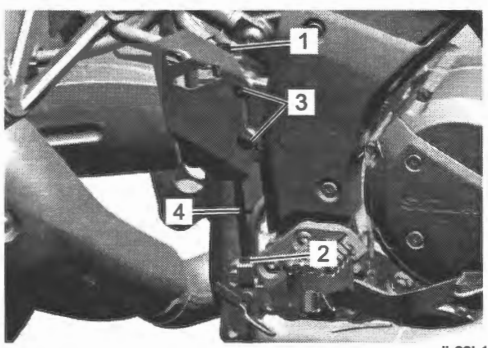

IL06L1410067-01

Installation

1) Install the master cylinder (1) and cover (2) to the frame.
2) Tighten the master cylinder mounting bolts (3) to the specified torque.

Tightening torque
Rear brake master cylinder mounting bolt (a): 10 N·m (1.0 kgf-m, 7.5 lbf-ft)

3) Tighten the lock-nut (4) to the specified torque.

Tightening torque
Rear brake master cylinder rod lock-nut (b): 17 N·m (1.7 kgf-m, 12.5 lbf-ft)

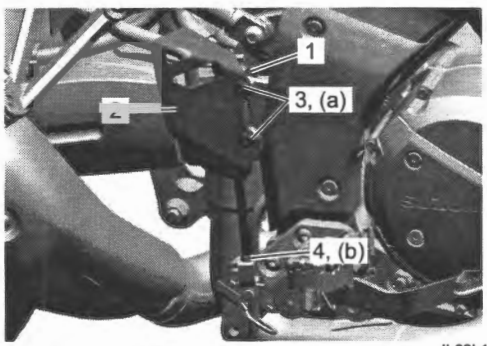

IL06L1410068-02

4) Install the brake hose union bolt and new seal washers.
5) After setting the brake hose union (1) to the stopper (2) of the master cylinder, tighten the union bolt (3) to the specified torque.

Tightening torque
Brake hose union bolt (a): 23 N·m (2.3 kgf-m, 17.0 lbf-ft)

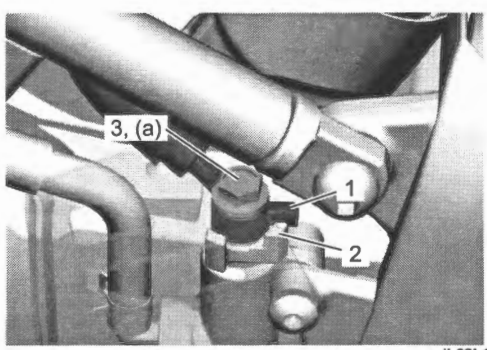

IL06L1410069-01

6) Tighten the reservoir tank mounting bolt.
7) Bleed air from the system after installing the master cylinder. ☞(Page 4A-12)
8) Adjust the brake pedal height. ☞(Page 4A-12)

Rear Brake Master Cylinder Disassembly and Assembly

BENL06L24106021

Refer to "Rear Brake Master Cylinder Assembly Removal and Installation" (Page 4A-20).

Disassembly

1) Disconnect the reservoir hose (1).
2) Remove the lock-nut (2).

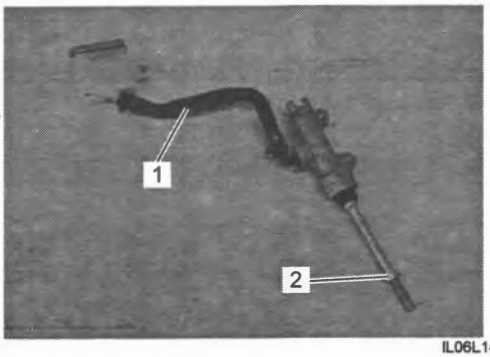

IL06L1410059-01

3) Remove the snap ring (1) with the special tool.

Special tool
09900–06108

4) Remove the brake hose connector (2) and O-ring (3).

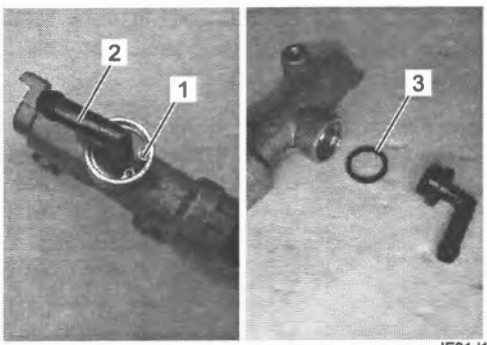

IE31J1410051-01

5) Pull out the dust boot (1) and remove the snap ring (2).

Special tool
09900–06108

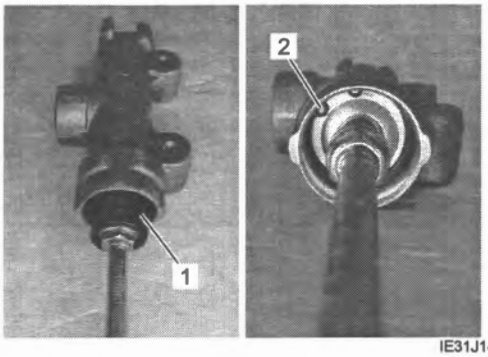

IE31J1410052-01

6) Remove the following parts from the master cylinder.
   - Push rod (1)
   - Piston/Secondary cup set (2)
   - Primary cup (3)
   - Return spring (4)

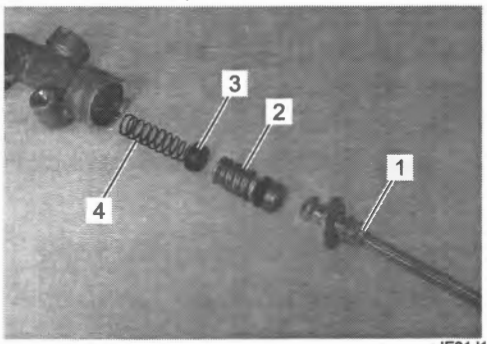

IE31J1410053-01

Assembly

1) Install the new primary cup (1) to the return spring (2).

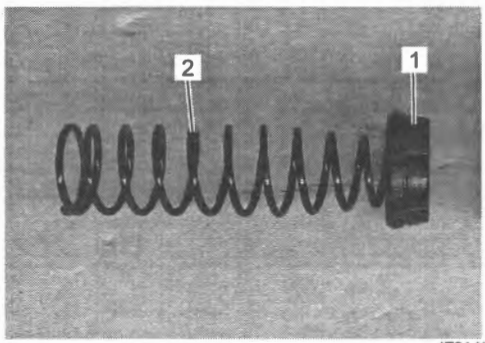

IE31J1410061-01

NOTICE

- **Wash the master cylinder components with new brake fluid before reassembly.**
- **Do not wipe the brake fluid off after washing the components.**
- **When washing the components, use the specified brake fluid. Never use different types of fluid or cleaning solvents such as gasoline, kerosine, etc.**
- **Apply brake fluid to the master cylinder bore and all of the master cylinder component to be inserted into the bore.**

Brake fluid (DOT 4)

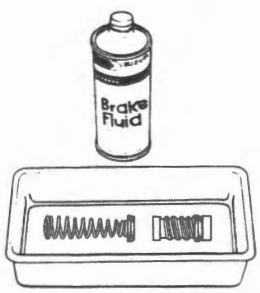

IB14J1410051-02

2) Install the primary cup/spring (1) and new secondary cup/piston (2) to the master cylinder.

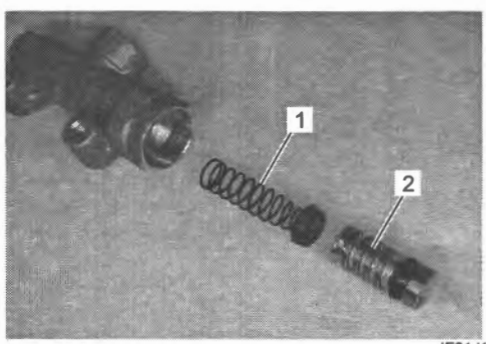

IE31J1410054-01

3) Apply grease to the push rod end.

"A": Grease 99000–25100 (SUZUKI SILICONE GREASE)

4) Install the push rod (1) to the master cylinder.
5) Install the new snap ring (2) with the special tool.

Special tool
09900–06108

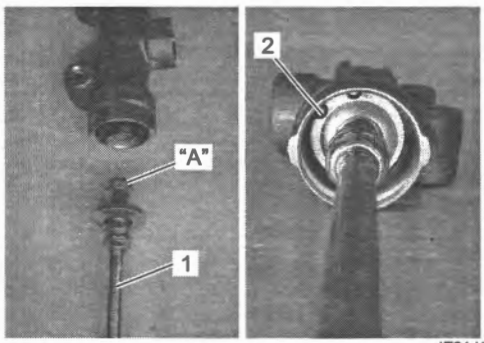

IE31J1410055-01

6) Set the dust boot (1) to the master cylinder securely.

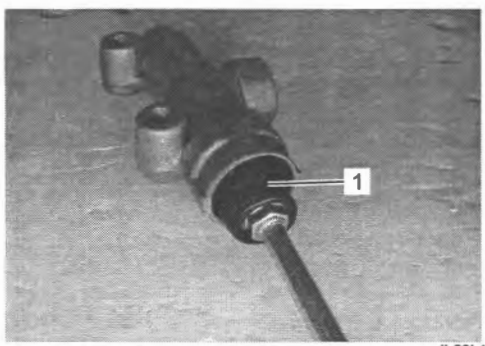

IL06L1410061-01

7) Install the new O-ring (1) to the brake hose connector (2).
8) Install the brake hose connector (2) to the master cylinder.
9) Install the new snap ring (3) with the special tool.

Special tool
09900–06108

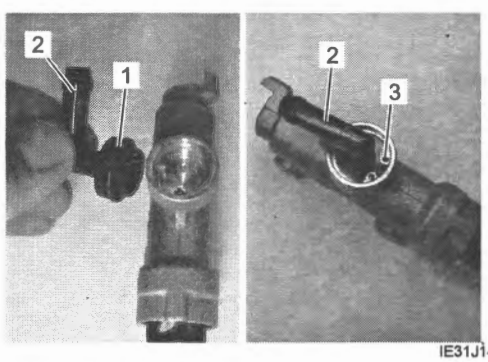

IE31J1410057-02

10) Install the lock-nut (1).
11) Connect the reservoir hose (2) and set the clips (3). Refer to "Rear Brake Hose Routing Diagram" (Page 4A-7).

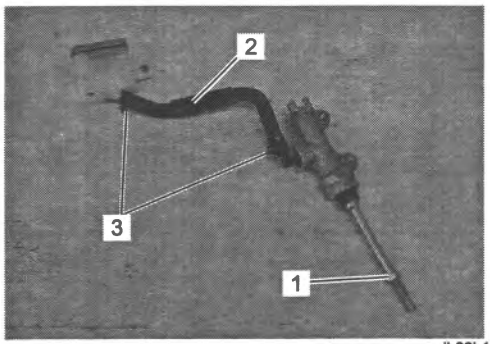

IL06L1410060-01

Rear Brake Master Cylinder Parts Inspection

BENL06L24106022

Refer to "Rear Brake Master Cylinder Disassembly and Assembly" (Page 4A-21).

Master Cylinder

Inspect the master cylinder bore (1) for any scratches or other damage. If any damage is found, replace the master cylinder with a new one.

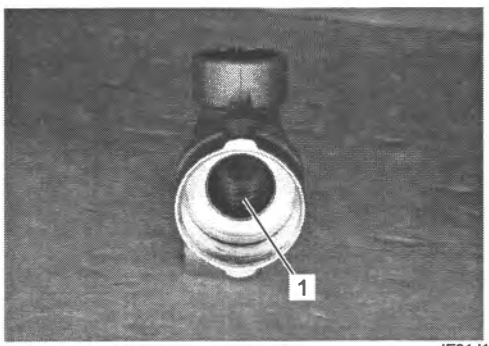

IE31J1410059-01

Piston

Inspect the piston surface for any scratches or other damage. If any damage is found, replace it piston with a new one.

Rubber Parts

Inspect the primary cup (1), secondary cup (2) and dust boot (3) for wear or damage. If any damage is found, replace them with new ones.

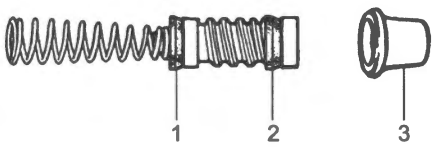

IE31J1410060-01

Specifications

Tightening Torque Specifications

BENL06L24107001

Fastening part	Tightening torque			Note
	N·m	kgf-m	lbf-ft	
Rear brake master cylinder mounting bolt	10	1.0	7.5	☞(Page 4A-11) / ☞(Page 4A-20)
Front footrest bracket bolt	26	2.7	19.5	☞(Page 4A-11)
Brake air bleeder valve	7.5	0.76	5.55	☞(Page 4A-12)
Front reservoir cap screw	1.5	0.15	1.10	☞(Page 4A-13) / ☞(Page 4A-17)
Front brake master cylinder mounting bolt	10	1.0	7.5	☞(Page 4A-15)
Brake hose union bolt	23	2.3	17.0	☞(Page 4A-15) / ☞(Page 4A-20)
Brake light switch screw	1.2	0.12	0.90	☞(Page 4A-17)
Brake lever pivot bolt	5.9	0.6	4.35	☞(Page 4A-17)
Brake lever pivot bolt lock-nut	5.9	0.6	4.35	☞(Page 4A-17)
Rear brake master cylinder rod lock-nut	17	1.7	12.5	☞(Page 4A-20)

Reference:
For the tightening torques of fasteners not specified in this page, refer to:
"Front Brake Hose Routing Diagram" (Page 4A-2)
"Rear Brake Hose Routing Diagram" (Page 4A-7)
"Front Brake Master Cylinder Assembly / Brake Lever Components" (Page 4A-14)
"Rear Brake Master Cylinder Assembly Components" (Page 4A-19)
"Fasteners Information" in Section 0C (Page 0C-10)

Special Tools and Equipment

Recommended Service Material

BENL06L24108001

Material	SUZUKI recommended product or Specification		Note
Brake fluid	DOT 4	—	☞(Page 4A-12) / ☞(Page 4A-16) / ☞(Page 4A-22)
Grease	SUZUKI SILICONE GREASE	P/No.: 99000–25100	☞(Page 4A-17) / ☞(Page 4A-22)

NOTE

Required service material(s) is also described in:
"Front Brake Master Cylinder Assembly / Brake Lever Components" (Page 4A-14)
"Rear Brake Master Cylinder Assembly Components" (Page 4A-19)

Special Tool

BENL06L24108002

09900–06108 Snap ring pliers (Internal) ☞(Page 4A-16) / ☞(Page 4A-17) / ☞(Page 4A-21) / ☞(Page 4A-21) / ☞(Page 4A-22) / ☞(Page 4A-22)	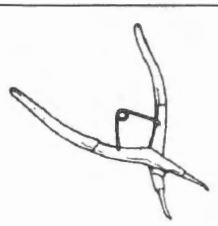	

Front Brakes

Repair Instructions

Front Brake Components

BENL06L24206001

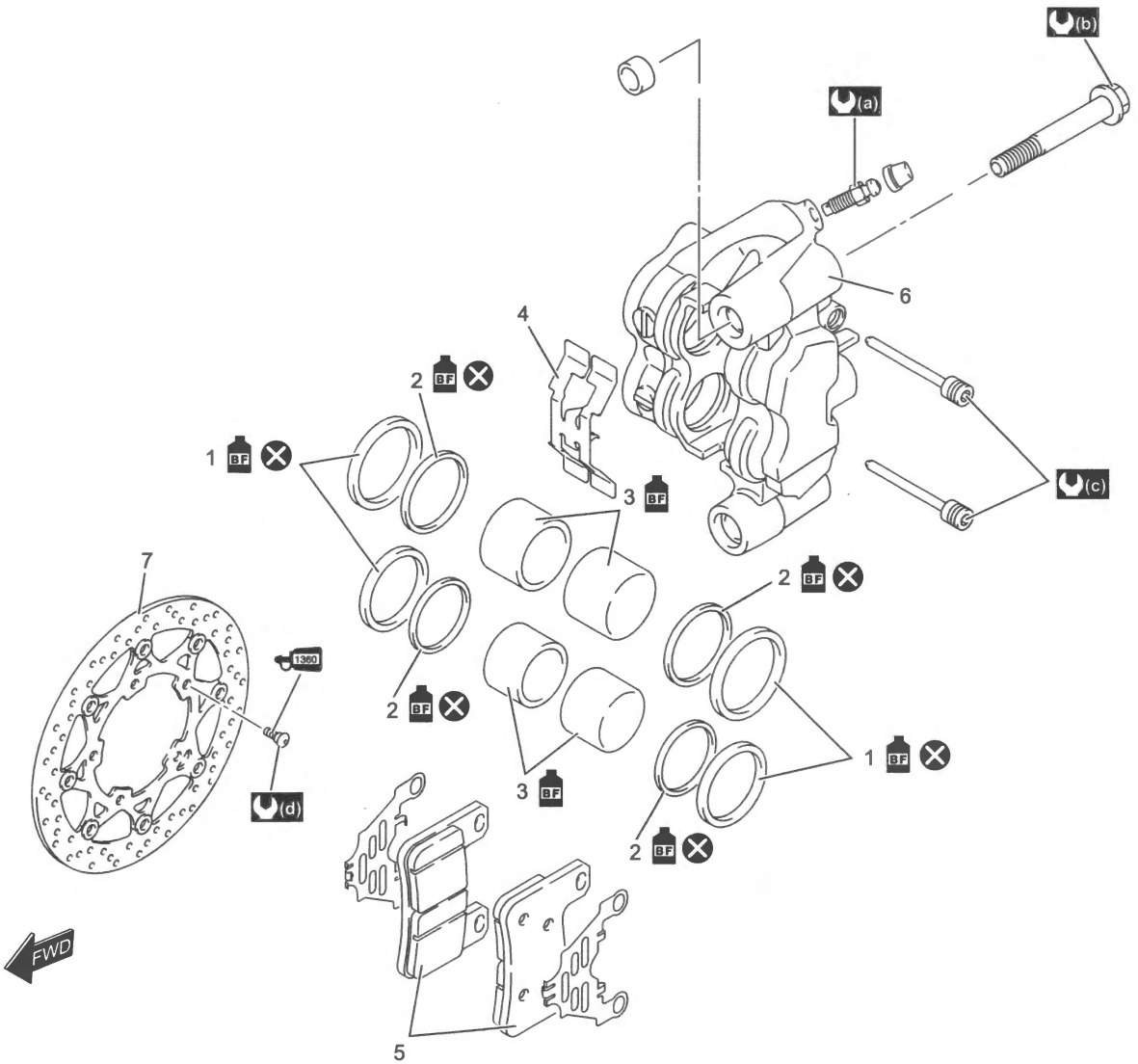

IE31J1420020-02

1. Piston seal	6. Front brake caliper	(d) : 23 N·m (2.3 kgf-m, 17.0 lbf-ft)
2. Dust seal	7. Front brake disc	1360 : Apply thread lock to the thread part.
3. Piston	(a) : 7.5 N·m (0.76 kgf-m, 5.55 lbf-ft)	BF : Apply brake fluid.
4. Brake pad spring	(b) : 39 N·m (4.0 kgf-m, 29.0 lbf-ft)	: Do not reuse.
5. Brake pad	(c) : 15 N·m (1.5 kgf-m, 11.0 lbf-ft)	

Front Brake Pad Inspection

BENL06L24206002

Refer to "Brakes" in Section 0B (Page 0B-20).

Front Brake Pad Replacement

BENL06L24206003

NOTICE

The right and left brake pads are installed symmetrically and therefore the removal procedure for one side is the same as that for the other side.

NOTE

After replacing the brake pads, pump the brake lever several times to check for proper brake operation and then check the brake fluid level.

1) Loosen the pad mounting pins (1).
2) Remove the brake caliper from the front fork by removing the caliper mounting bolts (2).

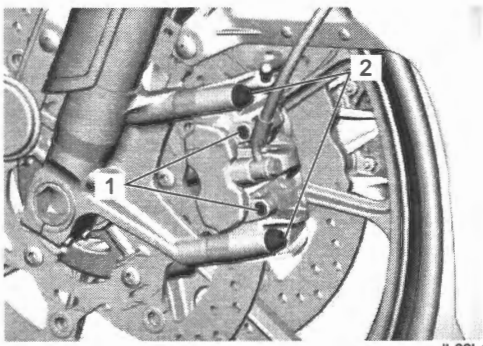

IL06L1420002-02

3) Remove the pad mounting pins (1) and brake pads (2) from the brake caliper.

NOTE

Do not operate the brake lever while removing the brake pads.

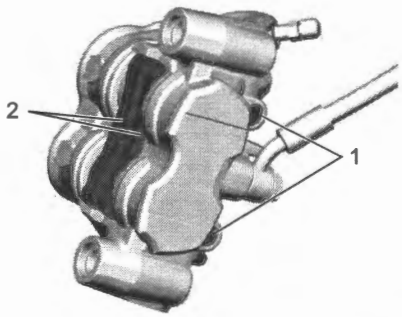

IL06L1420003-02

4) Clean up the caliper especially around the caliper pistons.
5) Assemble the new brake pad (1) and shim (2).

NOTE

- **Replace the brake pads as a set.**
- **Pushing back the caliper pistons into the caliper will facilitate installation of the brake pads. At the time, observe the reservoir level not to exceed the upper level.**

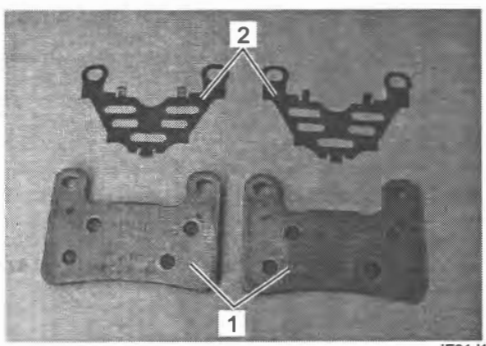

IE31J1420005-01

6) Install the new brake pads and temporarily pad mounting pins to the brake caliper.
7) Tighten the brake caliper mounting bolts (1) and pad mounting pins (2) to the specified torque.

Tightening torque
Caliper mounting bolt (a): 39 N·m (4.0 kgf-m, 29.0 lbf-ft)
Pad mounting pin (b): 15 N·m (1.5 kgf-m, 11.0 lbf-ft)

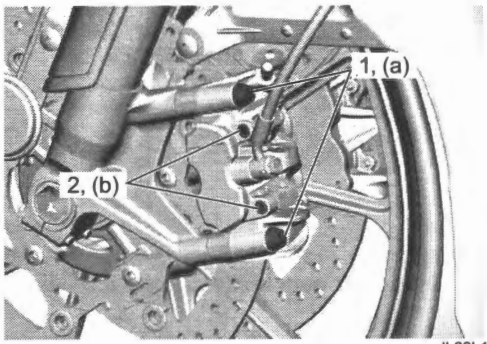

IL06L1420004-02

Front Brake Caliper Removal and Installation

BENL06L24206004

NOTE

The right and left calipers are installed symmetrically and therefore the removal procedure for one side is the same as that for the other side.

Removal

1) Drain brake fluid. ☞(Page 0B-23)
2) Place a rag underneath the union bolt on the brake caliper to catch any spilt brake fluid.
3) Remove the brake hose (1) from the caliper (2) by removing the union bolt (3) and catch the brake fluid in a suitable receptacle.

NOTE

Slightly loosen the pad mounting pins (4) to facilitate later disassembly.

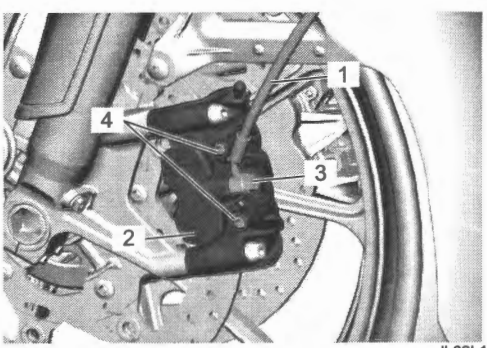

IL06L1420010-01

4) Remove the caliper (1) by removing the caliper mounting bolts (2).

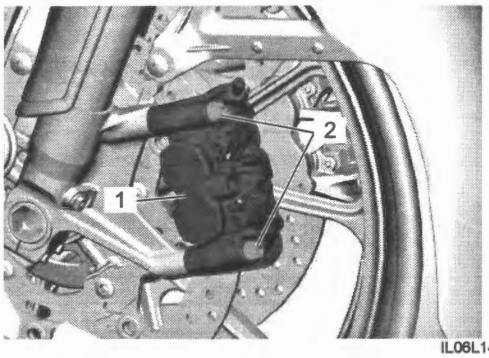

IL06L1420005-02

Installation

1) Install the brake caliper (1).
2) Tighten caliper mounting bolts (2) and pad mounting pins (3) to the specified torque.

Tightening torque
Caliper mounting bolt (a): 39 N·m (4.0 kgf-m, 29.0 lbf-ft)
Pad mounting pin (b): 15 N·m (1.5 kgf-m, 11.0 lbf-ft)

3) Install the brake hose union bolt (4) and new seal washers to brake hose.
4) After setting the brake hose union (5) to the stopper (6) of the brake caliper, tighten the union bolt (4) to the specified torque.

Tightening torque
Brake hose union bolt (c): 23 N·m (2.3 kgf-m, 17.0 lbf-ft)

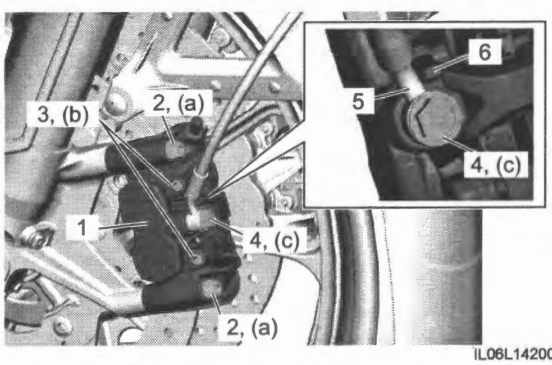

IL06L1420006-02

5) Bleed air from the brake system after installing the caliper. ☞(Page 4A-12)
6) Check the brake fluid leakage referring to "Brake Hose Inspection" in Section 4A (Page 4A-11) and brake operation.

Front Brake Caliper Disassembly and Reassembly

BENL06L24206005

Refer to "Front Brake Caliper Removal and Installation" (Page 4B-3).

⚠ CAUTION

Take care not to damage piston and caliper cylinder of front brake caliper.

NOTE

The right and left calipers are installed symmetrically and therefore the disassembly procedure for one side is the same as that for the other side.

Disassembly

1) Remove the brake pads. ☞(Page 4B-2)
2) Remove the pad spring (1).

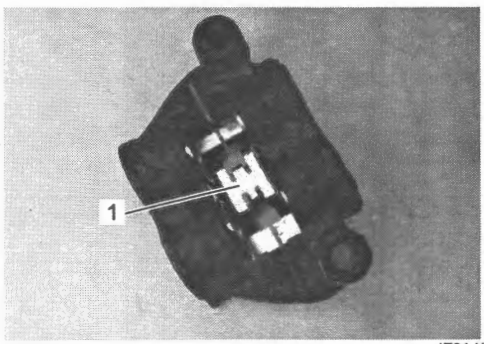

IE31J1420009-01

3) Remove the caliper pistons applying compressed air gradually from the hole for the brake hose.

⚠ WARNING

Do not apply highly compressed air to the piston as it is. Place a cloth to prevent brake piston from jumping-out. Gradually apply compressed air. Do not place your fingers in front of brake piston while applying compressed air.



IE31J1420010-01

4) Remove the dust seals (1) and piston seals (2).

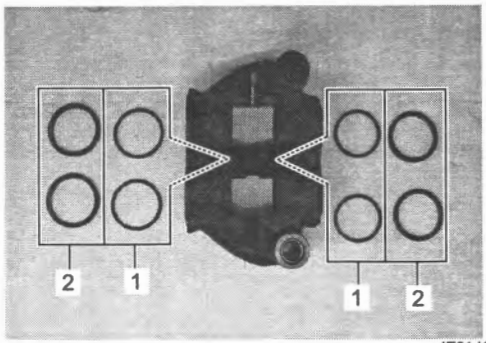

IE31J1420011-01

Reassembly

1) Wash the caliper bores and pistons with specified brake fluid. Particularly wash the dust seal grooves and piston seal grooves.

NOTICE

- **Wash the caliper components with fresh brake fluid before reassembly. Never use cleaning solvent or gasoline to wash them.**
- **Do not wipe the brake fluid off after washing the components.**
- **When washing the components, use the specified brake fluid. Never use different types of fluid or cleaning solvent such as gasoline, kerosine or the others.**

Brake fluid (DOT 4)

2) Apply the brake fluid to new piston seals (1) and new dust seals (2).

Brake fluid (DOT 4)

3) Install the piston seals (1) and dust seals (2).

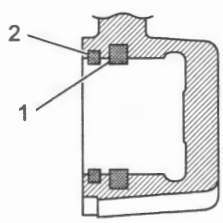

IL41K1420023-01

4) Install the caliper pistons to the brake caliper.
5) When installing the spring to caliper, bring its winder side of pawl (1) face top.

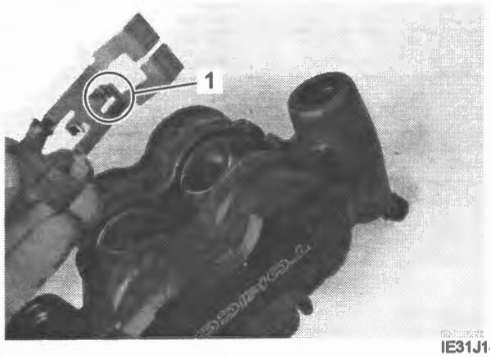

IE31J1420013-01

6) Install the brake pads. ☞(Page 4B-2)

Front Brake Caliper Parts Inspection

BENL06L24206006

Refer to "Front Brake Caliper Disassembly and Reassembly" (Page 4B-4).

Brake Caliper Cylinder
Inspect the brake caliper cylinder wall for nicks, scratches or other damage. If any damage is found, replace the caliper with a new one.

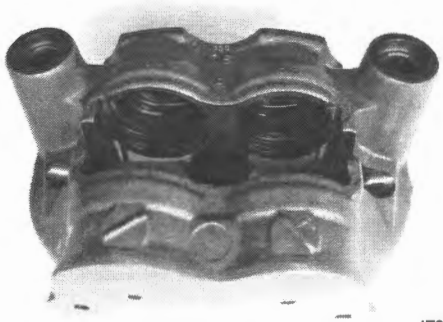
IE31J1420014-01

Brake Caliper Piston
Inspect the brake caliper pistons surface for any scratches or other damage. If any damage is found, replace them with new ones.

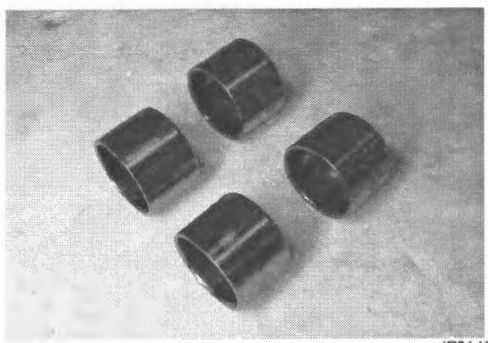
IE31J1420015-01

Brake Pad Mounting Pin
Inspect the brake pad mounting pins for wear and other damage. If any damage is found, replace them with new ones.

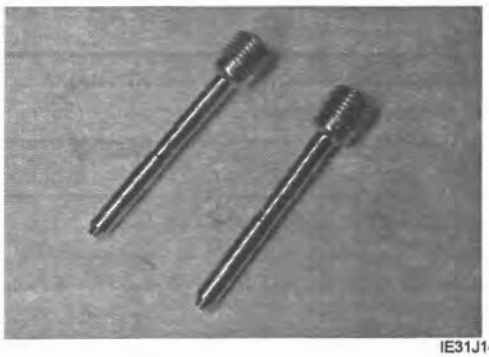
IE31J1420016-01

Brake Pad Spring
Inspect the brake pad spring for damage and excessive bend. If any defects are found, replace it with a new one.

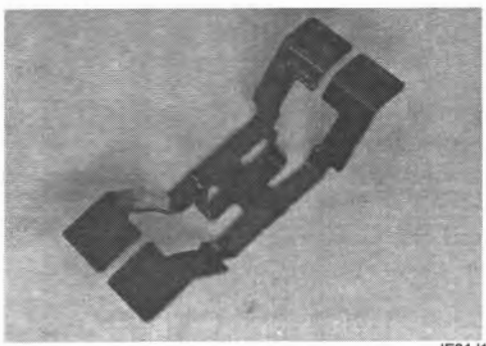
IE31J1420017-01

Front Brake Disc Removal and Installation

BENL06L24206007

Refer to "Front Wheel Assembly Removal and Installation" in Section 2D (Page 2D-5).

Removal
1) Remove the front brake disc (1).

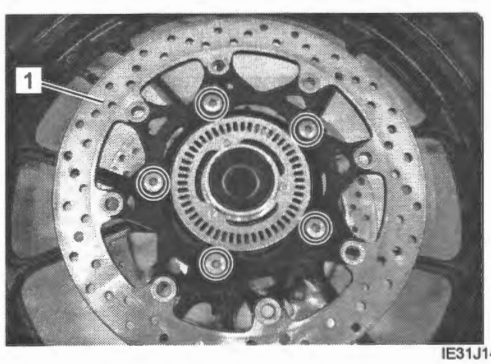

IE31J1420018-01

Installation

1) Make sure that the brake disc is clean and free of any grease.
2) Install the front brake disc.

NOTE

The stamped mark (1) on the brake disc should face to the outside.

3) Apply thread lock to the brake disc bolts and tighten them to the specified torque.

"A": Thread lock cement 99000–32130 (THREAD LOCK CEMENT 1360)

Tightening torque
Brake disc bolt (a): 23 N·m (2.3 kgf-m, 17.0 lbf-ft)

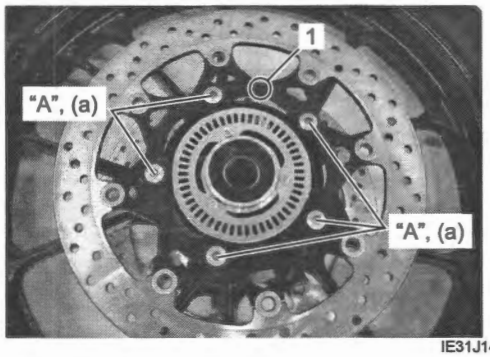

IE31J1420019-01

Front Brake Disc Inspection

BENL06L24206008

Refer to "Brakes" in Section 0B (Page 0B-20).

Specifications

Tightening Torque Specifications

BENL06L24207001

Fastening part	Tightening torque			Note
	N·m	kgf-m	lbf-ft	
Caliper mounting bolt	39	4.0	29.0	☞(Page 4B-3) / ☞(Page 4B-3)
Pad mounting pin	15	1.5	11.0	☞(Page 4B-3) / ☞(Page 4B-3)
Brake hose union bolt	23	2.3	17.0	☞(Page 4B-3)
Brake disc bolt	23	2.3	17.0	☞(Page 4B-6)

Reference:
For the tightening torques of fasteners not specified in this page, refer to:
"Front Brake Components" (Page 4B-1)
"Fasteners Information" in Section 0C (Page 0C-10)

Special Tools and Equipment

Recommended Service Material

BENL06L24208001

Material	SUZUKI recommended product or Specification		Note
Brake fluid	DOT 4	—	☞(Page 4B-4) / ☞(Page 4B-4)
Thread lock cement	THREAD LOCK CEMENT 1360	P/No.: 99000–32130	☞(Page 4B-6)

NOTE

Required service material(s) is also described in:
"Front Brake Components" (Page 4B-1)

Rear Brakes

Repair Instructions

Rear Brake Components

BENL06L24306001

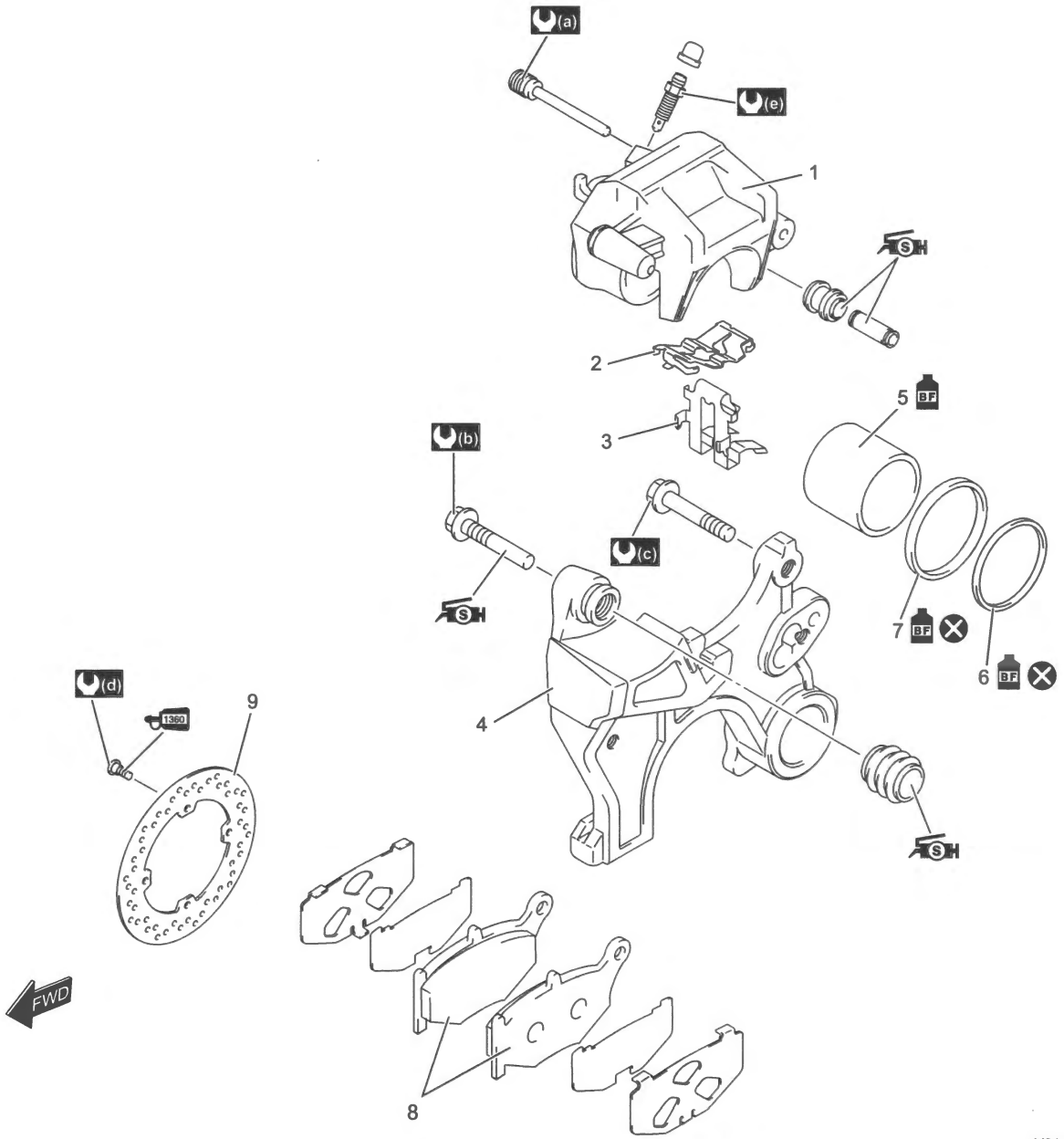

IJ31J1430001-01

1. Rear brake caliper	7. Piston seal	(d) : 23 N·m (2.3 kgf-m, 17.0 lbf-ft)
2. Brake pad spring	8. Brake pad	(e) : 7.5 N·m (0.76 kgf-m, 5.55 lbf-ft)
3. Retainer	9. Rear brake disc	S : Apply silicone grease.
4. Caliper bracket	(a) : 15 N·m (1.5 kgf-m, 11.0 lbf-ft)	1360 : Apply thread lock to the thread part.
5. Piston	(b) : 32 N·m (3.3 kgf-m, 24.0 lbf-ft)	BF : Apply brake fluid.
6. Dust seal	(c) : 17 N·m (1.7 kgf-m, 12.5 lbf-ft)	: Do not reuse.

Rear Brake Pad Inspection

BENL06L24306002

Refer to "Brakes" in Section 0B (Page 0B-20).

Rear Brake Pad Replacement

BENL06L24306003

NOTE

After replacing the brake pads, pump the brake pedal several times to check for proper brake operation and then check the brake fluid level.

1) Remove the pad mounting pin (1) from the brake caliper.
2) Remove the caliper mounting bolt (2) from the brake caliper.

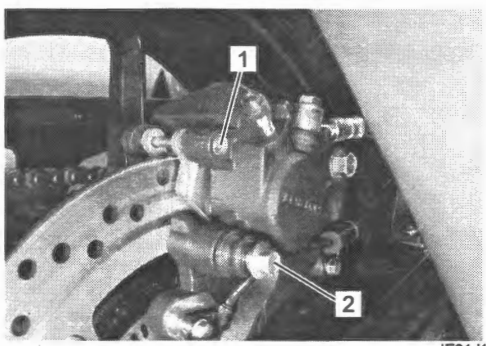

IE31J1430002-01

3) Remove the brake pads (1) from the brake caliper with the rear caliper pivoted up.

NOTE

Do not operate the brake pedal while removing the brake pads.

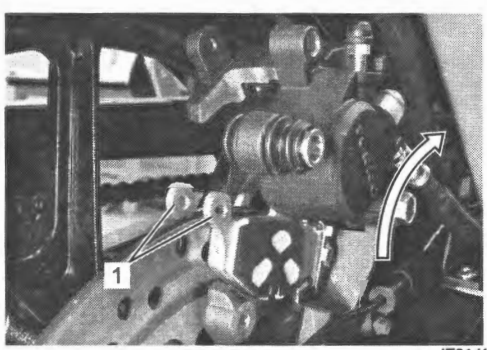

IE31J1430003-01

4) Clean up the caliper especially around the caliper piston.
5) Assemble the new brake pads (1), insulators (2) and shims (3).

NOTE

- **Replace the brake pads as a set.**
- **Pushing back the caliper piston into the caliper will facilitate installation of the brake pads. At the time, observe the reservoir level not to exceed the upper level.**

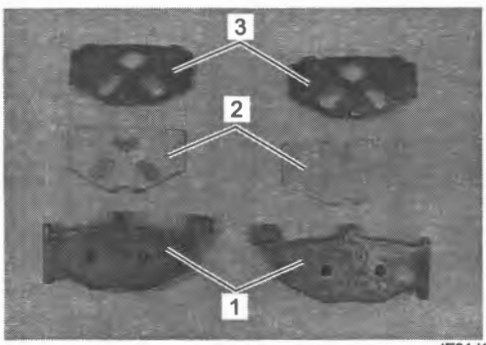

IE31J1430004-01

6) Install the new brake pads to the brake caliper.

NOTE

Check the pads end (1) for proper fit to the brake pad spring.

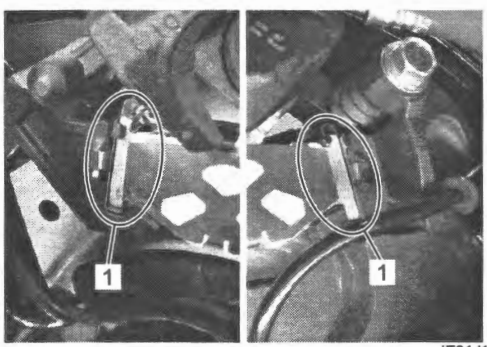

IE31J1430005-01

7) Tighten the caliper mounting bolt (1) and pad mounting pin (2) to the specified torque.

Tightening torque
Caliper mounting bolt (a): 17 N·m (1.7 kgf-m, 12.5 lbf-ft)
Pad mounting pin (b): 15 N·m (1.5 kgf-m, 11.0 lbf-ft)

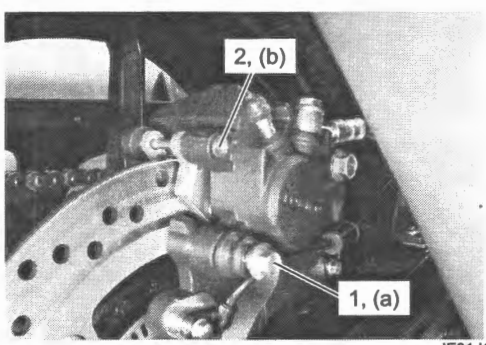

IE31J1430006-01

Rear Brake Caliper Removal and Installation

BENL06L24306004

Removal

1) Drain brake fluid. ☞(Page 0B-23)
2) Place a rag underneath the union bolt on the brake caliper to catch any spilt brake fluid.
3) Remove the brake hose from the caliper by removing the union bolt (1) and catch the brake fluid in a suitable receptacle.

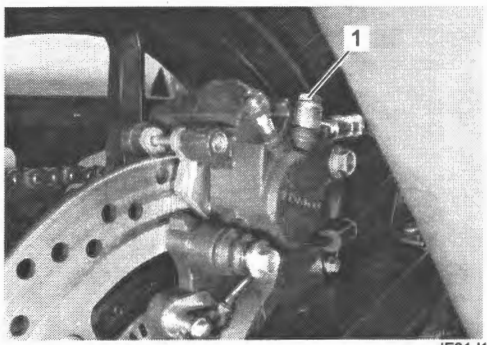

IE31J1430007-01

4) Remove the brake pads. ☞(Page 4C-2)
5) Pivot the caliper up and remove the caliper from the caliper bracket.

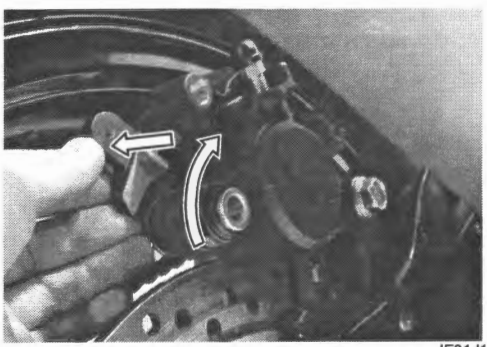

IE31J1430008-02

Installation

1) Apply grease to the sliding pin.

"A": Grease 99000–25100 (SUZUKI SILICONE GREASE)

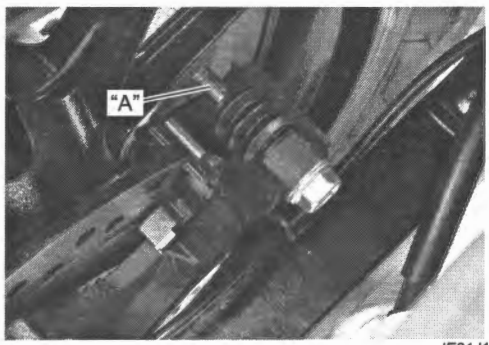

IE31J1430009-01

2) Install the caliper to the caliper bracket.
3) Set the rubber boot (1) onto the caliper securely.

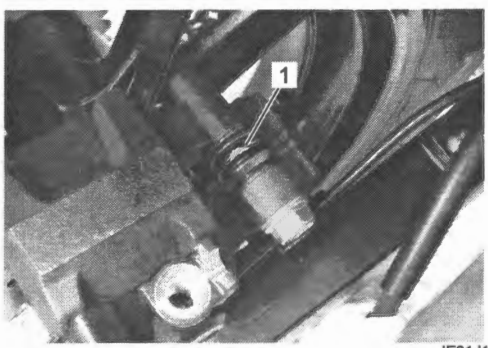

IE31J1430010-01

4) Install the brake pads. ☞(Page 4C-2)
5) Install the brake hose union bolt (1) and new seal washers to brake hose.
6) After setting the brake hose union to the stopper, tighten the union bolt (1) to the specified torque.

Tightening torque
Brake hose union bolt (a): 23 N·m (2.3 kgf-m, 17.0 lbf-ft)

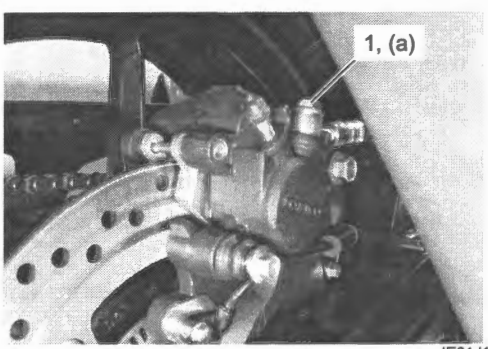

IE31J1430011-01

7) Bleed air from the brake system after installing the caliper. ☞(Page 4A-12)
8) Check the brake fluid leakage referring to "Brake Hose Inspection" in Section 4A (Page 4A-11) and brake operation.

Rear Brake Caliper Disassembly and Reassembly

BENL06L24306005

Refer to "Rear Brake Caliper Removal and Installation" (Page 4C-3).

⚠ CAUTION

Take care not to damage piston and caliper cylinder of rear brake caliper.

Disassembly

1) Remove the pad spring (1), rubber boot (2) and sliding pin (3).

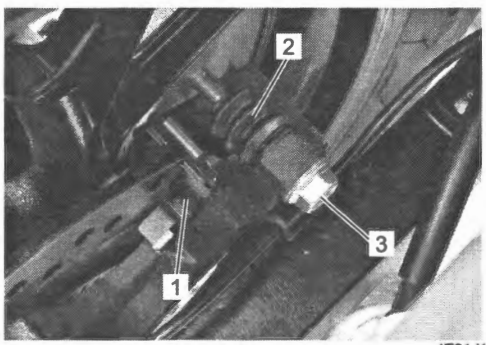

IE31J1430012-01

2) Remove the retainer (1).
3) Remove the spacer (2) and rubber boot (3) from the caliper.

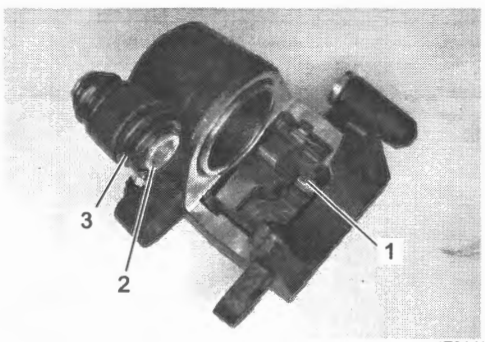

IE31J1430013-01

4) Remove the caliper piston applying compressed air gradually from the hole for the brake hose.

⚠ WARNING

Do not apply highly compressed air to the piston as it is. Place a cloth to prevent brake piston from jumping-out. Gradually apply compressed air. Do not place your fingers in front of brake piston while applying compressed air.

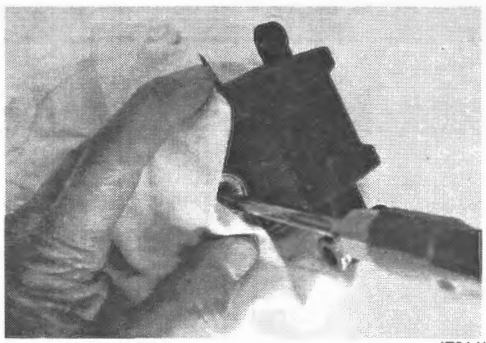

IE31J1430014-01

5) Remove the dust seal (1) and piston seal (2).

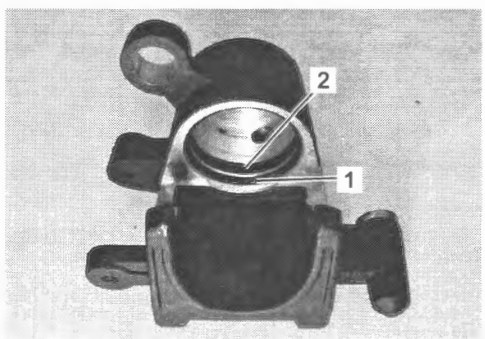

IE31J1430015-01

Reassembly

1) Wash the caliper bore and piston with specified brake fluid. Particularly wash the dust seal groove and piston seal groove.

NOTICE

- **Wash the caliper components with fresh brake fluid before reassembly. Never use cleaning solvent or gasoline to wash them.**
- **Do not wipe the brake fluid off after washing the components.**
- **When washing the components, use the specified brake fluid. Never use different types of fluid or cleaning solvent such as gasoline, kerosine or the others.**

Brake fluid (DOT 4)

2) Apply the brake fluid to new piston seal (1) and new dust seal (2).

Brake fluid (DOT 4)

3) Install the piston seal (1) and dust seal (2).

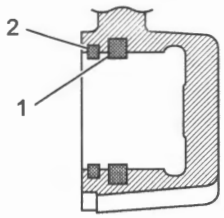

IL41K1430011-01

4) Install the caliper piston to the brake caliper.
5) Install the rubber boot (1) to the caliper.

NOTE

The wide side "a" of rubber boot inside.

6) Apply grease to the inside of the rubber boot (1).

"A": Grease 99000–25100 (SUZUKI SILICONE GREASE)

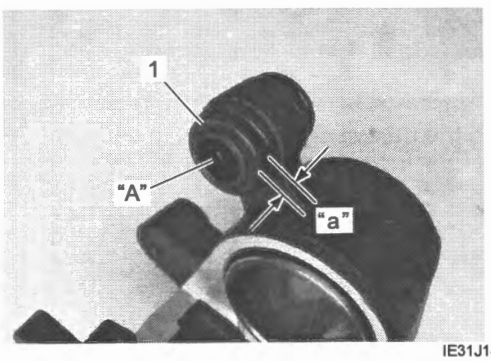

IE31J1430017-02

7) Apply grease to the spacer (1).

"A": Grease 99000–25100 (SUZUKI SILICONE GREASE)

8) Install the spacer (1) into the rubber boot.
9) Set the rubber boot to the spacer securely.

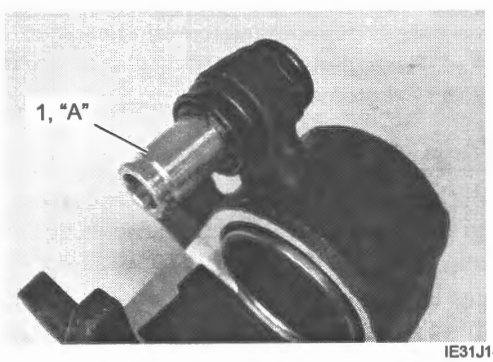

IE31J1430018-01

10) Install the pad spring (1).

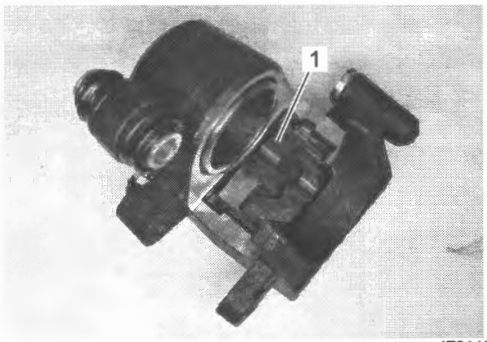

IE31J1430019-01

11) Tighten sliding pin (1) to the specified torque.

Tightening torque
Caliper sliding pin (a): 32 N·m (3.3 kgf-m, 24.0 lbf-ft)

12) Apply grease to the sliding pin (1).

"A": Grease 99000–25100 (SUZUKI SILICONE GREASE)

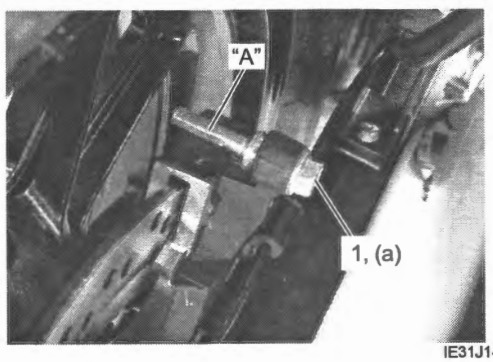

IE31J1430020-01

13) Apply grease to the inside of the rubber boot (1).

"A": Grease 99000–25100 (SUZUKI SILICONE GREASE)

14) Set the rubber boot (1) onto the caliper bracket.
15) Install the retainer (2).

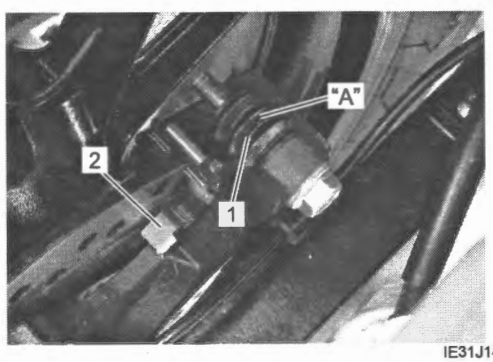

IE31J1430021-01

Rear Brake Caliper Parts Inspection

BENL06L24306006

Refer to "Rear Brake Caliper Disassembly and Reassembly" (Page 4C-4).

Brake Caliper Cylinder

Inspect the brake caliper cylinder wall for nicks, scratches or other damage. If any damage is found, replace the caliper with a new one.

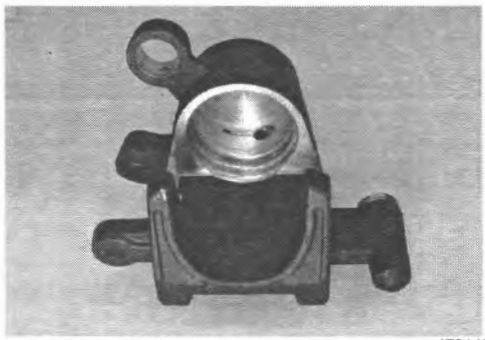

IE31J1430022-01

Brake Caliper Piston

Inspect the brake caliper piston surface for any scratches or other damage. If any defects are found, replace the piston with a new one.

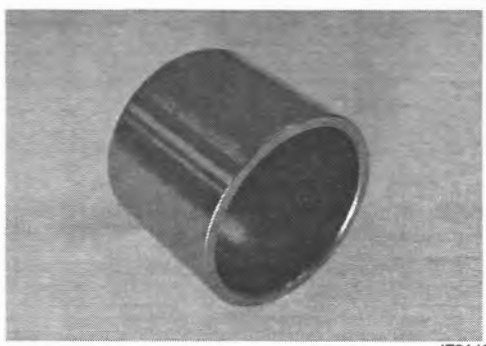

IE31J1430023-01

Brake Pad Mounting Pin

Inspect the brake pad mounting pin for wear and other damage. If any damage is found, replace the brake pad mounting pin with a new one.



IE31J1430024-01

Boot and Spacer

Inspect the boots and spacer for damage and wear. If any defects are found, replace them with new ones.

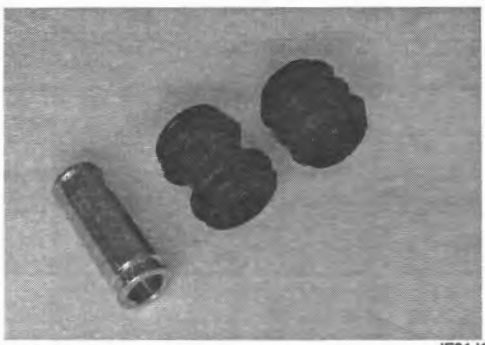

IE31J1430025-01

Brake Pad Spring

Inspect the brake pad springs for damage and excessive bend. If any defects are found, replace them with new ones.

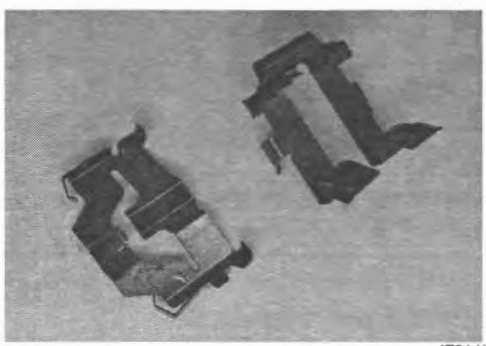

IE31J1430026-01

Brake Caliper Sliding Pin

Inspect the brake caliper sliding pin for wear and other damage. If any damage is found, replace the brake caliper sliding pin with a new one.



IE31J1430027-01

Rear Brake Disc Removal and Installation

BENL06L24306007

Refer to "Rear Wheel Assembly Removal and Installation" in Section 2D (Page 2D-12).

Removal

1) Remove the rear brake disc (1).

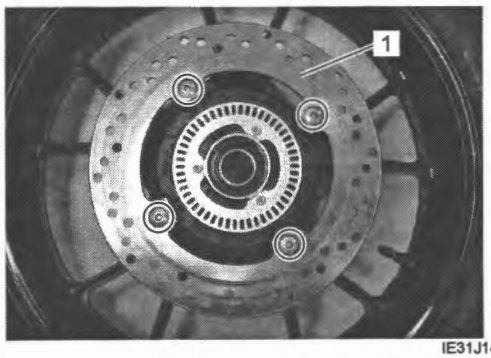

IE31J1430028-01

Installation

1) Make sure that the brake disc (1) is clean and free of any grease.
2) Install the rear brake disc (1).

NOTE

The stamped mark (2) on the brake disc should face to the outside.

3) Apply thread lock to the brake disc bolts and tighten them to the specified torque.

"A": Thread lock cement 99000–32130 (THREAD LOCK CEMENT 1360)

Tightening torque
Brake disc bolt (a): 23 N·m (2.3 kgf-m, 17.0 lbf-ft)

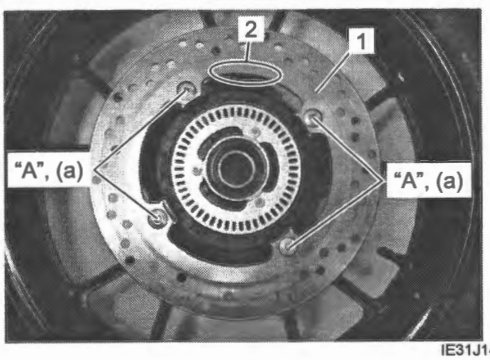

IE31J1430029-02

Rear Brake Disc Inspection

BENL06L24306008

Refer to "Brakes" in Section 0B (Page 0B-20).

Specifications

Tightening Torque Specifications

BENL06L24307001

Fastening part	Tightening torque			Note
	N·m	kgf-m	lbf-ft	
Caliper mounting bolt	17	1.7	12.5	☞(Page 4C-2)
Pad mounting pin	15	1.5	11.0	☞(Page 4C-2)
Brake hose union bolt	23	2.3	17.0	☞(Page 4C-3)
Caliper sliding pin	32	3.3	24.0	☞(Page 4C-5)
Brake disc bolt	23	2.3	17.0	☞(Page 4C-7)

Reference:
For the tightening torques of fasteners not specified in this page, refer to:
"Rear Brake Components" (Page 4C-1)
"Fasteners Information" in Section 0C (Page 0C-10)

Special Tools and Equipment

Recommended Service Material

BENL06L24308001

Material	SUZUKI recommended product or Specification		Note
Brake fluid	DOT 4	—	☞(Page 4C-4) / ☞(Page 4C-4)
Grease	SUZUKI SILICONE GREASE	P/No.: 99000–25100	☞(Page 4C-3) / ☞(Page 4C-5) / ☞(Page 4C-5) / ☞(Page 4C-5) / ☞(Page 4C-5)
Thread lock cement	THREAD LOCK CEMENT 1360	P/No.: 99000–32130	☞(Page 4C-7)

NOTE

Required service material(s) is also described in:
"Rear Brake Components" (Page 4C-1)

ABS

Precautions

Precautions for ABS Service

BENL06L24500001

Refer to "General Precautions" in Section 00 (Page 00-1), "Precautions for Electrical Circuit Service" in Section 00 (Page 00-2) and "Precautions for Circuit Tester" in Section 00 (Page 00-8).

- Battery voltage is always applied to the ABS control unit. Therefore, disconnect the battery (–) lead wire before disconnecting the ABS control unit coupler.
- When the ABS control unit coupler is connected, do not disconnect the sensor coupler(s) with the ignition switch turned ON. If the sensor coupler is disconnected with the ignition ON, DTC will be stored in the ABS control unit.
- The wheel speed sensor and ABS control unit/HU cannot be disassembled.

Precautions for Diagnosing Troubles

BENL06L24500002

To ensure that the trouble diagnosis is done accurately and smoothly, observe the following and follow "ABS Check" (Page 4E-12).

- The information on the DTCs detected by the ABS control unit can be checked and cleared using the SDS-II. For the usage and available functions of the SDS-II, refer to the SDS-II operation manual.
- If the motorcycle was operated in any of the following conditions, ABS indicator light may light but this does not indicate any fault in ABS.
  - The motorcycle is stuck in mud, sand, etc.
  - Wheel spins while driving.
  - Wheels are rotated while the motorcycle is jacked up.
- Be sure to follow the trouble diagnosis procedure described in "ABS Check" (Page 4E-12). If the trouble diagnosis procedure is not followed properly, incorrect diagnosis may result. (If the incorrect procedure is performed, other DTC may be stored in the ABS control unit.)

NOTE

After repairing the trouble, clear the DTC using SDS-II. ☞(Page 4E-16)

Precautions for IMU

BENL06L24500003

- Pay attention not to expose the IMU to strong shocks, such as striking or dropping it.
- When IMU is removed / installed, do not use an impact wrench, as shock it generates may damage the IMU.
- In the case that IMU is dropped, do not use it after that.

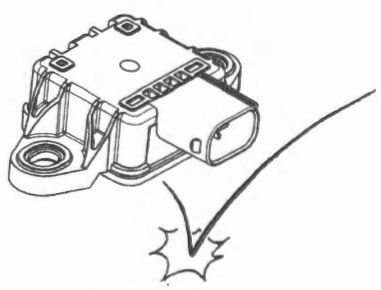

IJ31J1452001-01

General Description

ABS Control Unit Calculating Process

BENL06L24501001

The ABS controls and its calculations, in addition to the self-diagnosing and the fail-safe processes, occur during the ABS control unit calculating process. In addition, if a malfunction is detected by the self-diagnosis function, the brake stops being controlled by the ABS and a diagnostic trouble code is stored.

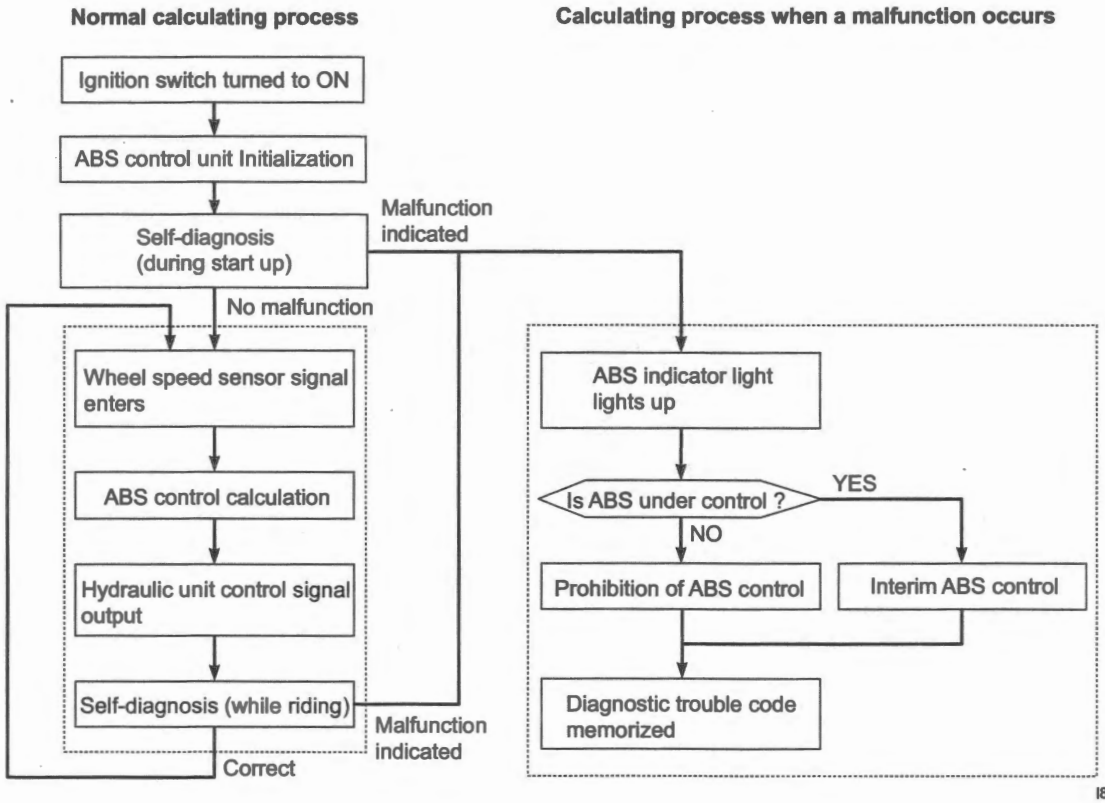

I823H3450006-01

Self-diagnosis Function

BENL06L24501002

The self-diagnosis function is incorporated in the ABS control unit. The function has two modes, "User mode" and "Dealer mode". The user can only be notified by the LED (ABS indicator light). To check the function of the individual ABS devices, the dealer mode is provided. In this check, the special tool is necessary to read the DTC.

Warning Function

- The ABS control unit warns riders to turn the ABS indicator light (1) on or blink it depending on the failure place or its content. When the ignition switch is turned to ON, the ABS indicator light lights up even if no malfunction has occurred, to indicate that the LED is not burnt out. It will go off after the motorcycle is ridden at more than 5 km/h (3.1 mile/h).
  If an ABS malfunction has occurred, the ABS indicator light keeps lighting up.
- When any of the DTCs is detected, the ABS controller turns the master warning indicator light (2) on.
- For LCD indication (3), referring to "Combination Meter System Description" in Section 0A.

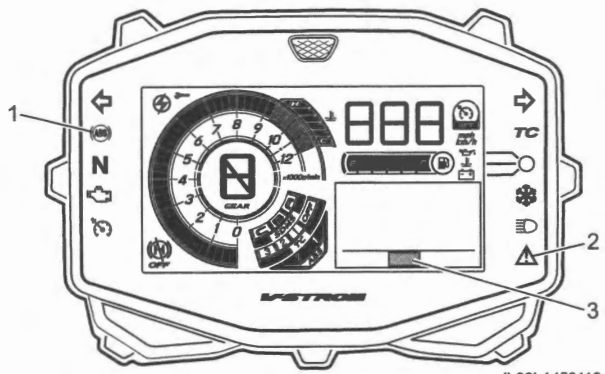

IL06L1450110-01

Diagnostic coupler location

Mode select coupler (2P) (1) and (6P) (2) is located under the rear seat. Mode select coupler (2P) can use mode select switch, mode select coupler (6P) can use SDS-II.

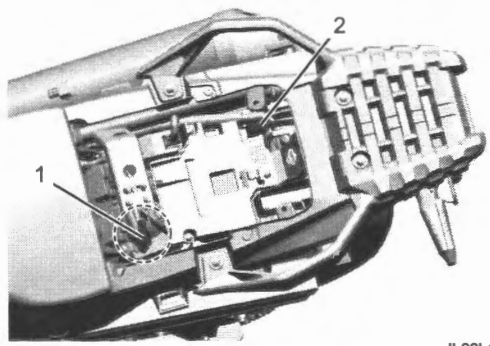

IL06L1450111-01

User Mode

The ABS indicator light shows the ABS operating condition. During normal operation, the ABS indicator light lights up when the ignition switch is turned to ON and goes off after the motorcycle is ridden at more than 5 km/h (3.1 mile/h). If a malfunction has occurred, the ABS indicator light keeps lighting up.

ABS indicator light condition	Correction / Reference Item
The ABS indicator light goes off when the motorcycle is ridden at more than 5 km/h (3.1 mile/h).	The ABS is normally activated.
The ABS indicator light keeps lighting up even though the motorcycle is ridden at more than 5 km/h (3.1 mile/h).	One or more malfunction has been found and ABS activation been hanged up. Check the DTC. Refer to "DTC Check" (Page 4E-14).
The ABS indicator light does not light up when turning the ignition switch ON.	Check the wire harness and combination meter. Refer to "ABS Indicator Light Inspection" (Page 4E-25).

Dealer Mode

The defective function is memorized in the ABS control unit. Use the mode select coupler (6P) to connect to the SDS-II. The memorized DTC is displayed on ABS indicator light. Malfunction means that the ABS control unit does not receive signal from the devices. These affected devices are indicated in the code form.

NOTE

Before checking the DTC, do not disconnect the ABS control unit coupler. If the coupler from the ABS control unit is disconnected, the DTC memory is erased and the DTC can not be checked.

Schematic and Routing Diagram

ABS Circuit Diagram

BENL06L24502001

With motion track brake system

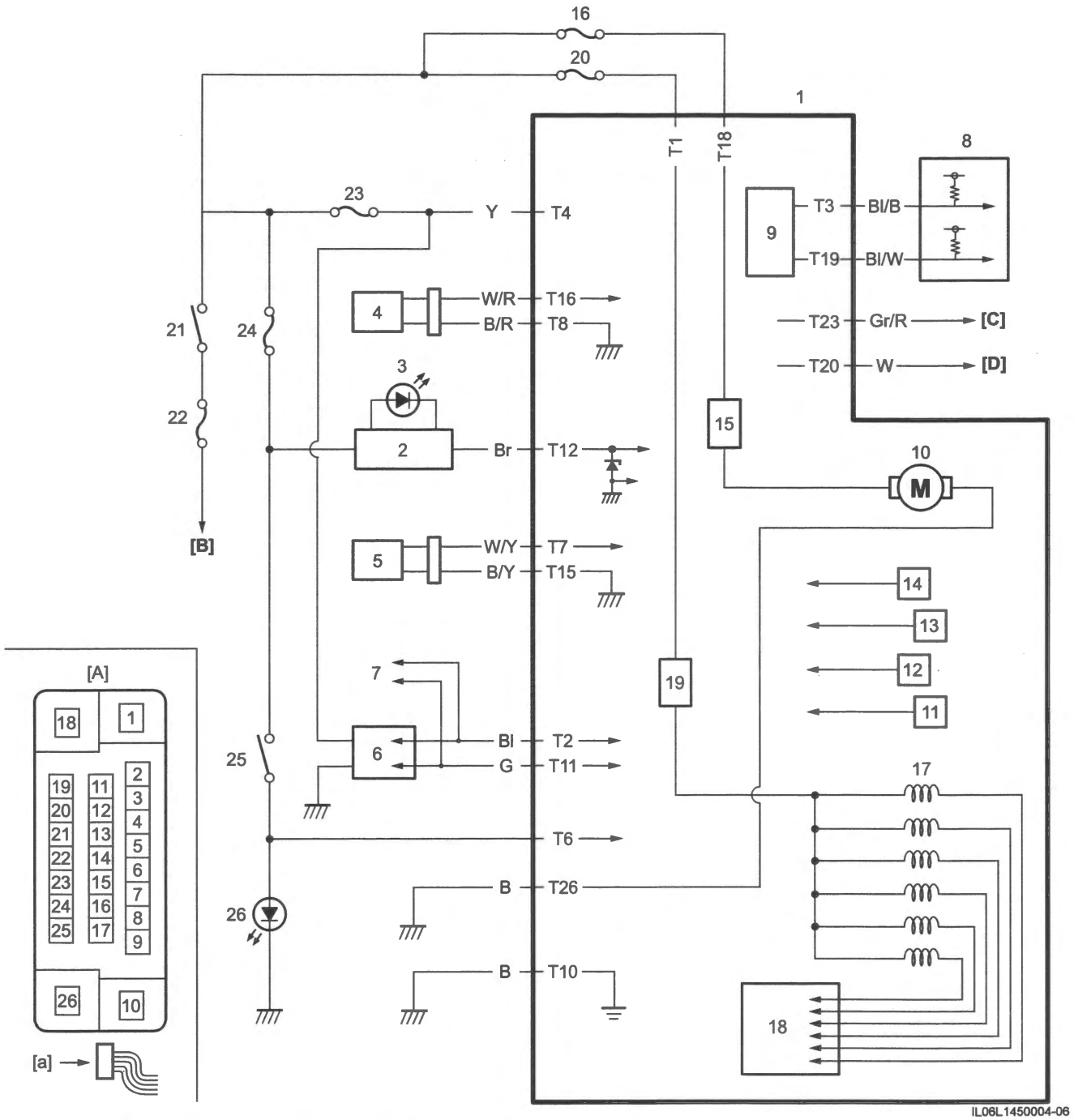

IL06L1450004-06

[A]: ABS control unit coupler (View: [a])	7. To other control modules by CAN	17. Solenoid valve
[B]: To battery	8. ECM	18. Solenoid valve drive circuit
[C]: To mode select switch coupler (6P)	9. Wheel speed output circuit	19. Solenoid valve relay
[D]: To mode select switch coupler (2P)	10. Pump motor	20. ABS solenoid valve fuse (15A)
1. CPU (ABS controller)	11. Front brake master cylinder pressure sensor	21. Ignition switch
2. Combination meter	12. Front brake caliper pressure sensor	22. Main fuse (20A)
3. ABS indicator light	13. Rear brake master cylinder pressure sensor	23. Ignition fuse
4. Front wheel speed sensor	14. Rear brake caliper pressure sensor	24. Signal fuse
5. Rear wheel speed sensor	15. Pump motor relay	25. Brake switch
6. IMU	16. ABS motor fuse (25A)	26. Brake light

Without motion track brake system

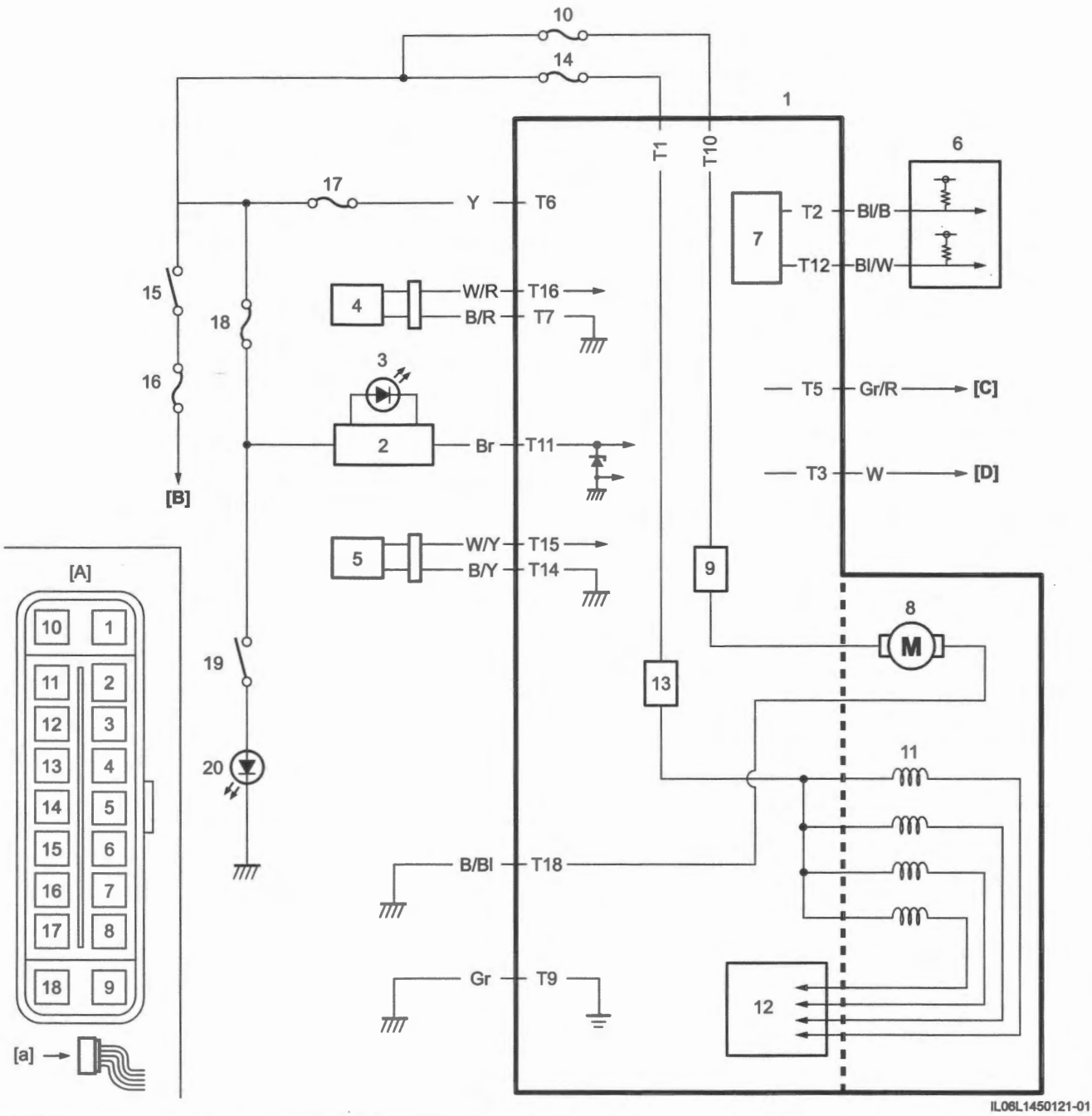

IL06L1450121-01

[A]:	ABS control unit coupler (View: [a])	5.	Rear wheel speed sensor	13.	Solenoid valve relay
[B]:	To battery	6.	ECM	14.	ABS solenoid valve fuse (15 A)
[C]:	To mode select switch coupler (6P)	7.	Wheel speed output circuit	15.	Ignition switch
[D]:	To mode select switch coupler (2P)	8.	Pump motor	16.	Main fuse (20 A)
1.	CPU (ABS controller)	9.	Pump motor relay	17.	Ignition fuse
2.	Combination meter	10.	ABS motor fuse (25A)	18.	Signal fuse
3.	ABS indicator light	11.	Solenoid valve	19.	Brake switch
4.	Front wheel speed sensor	12.	Solenoid valve drive circuit	20.	Brake light

Front Wheel Speed Sensor Routing Diagram

BENL06L24502002

NOTICE

- **Be careful not to twist lead wire.**
- **Set clamps without looseness of lead wire.**

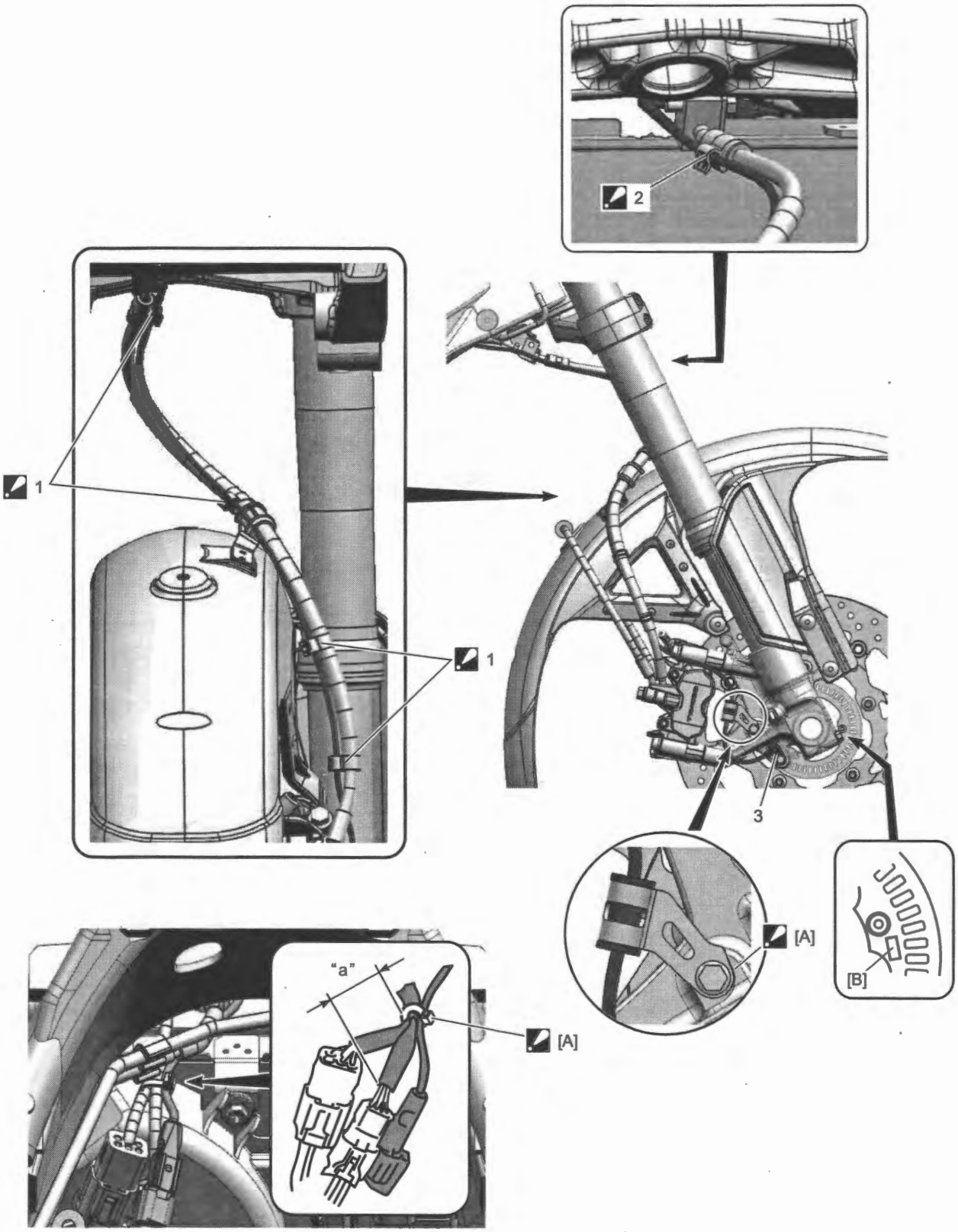

IL06L1450116-01

[A]:	After positioning the clamp with the stopper, tighten the bolt.	2.	Clamp : Clamp the marking of the wheel speed sensor lead wire to side of the brake hose end fitting.
[B]:	Outside marking	3.	Front wheel speed sensor
1.	Clamp : Clamp the marking of the wheel speed sensor lead wire inside of the vehicle.	"a":	20 – 30 mm (0.8 – 1.2 in)

Rear Wheel Speed Sensor Routing Diagram

BENL06L24502003

NOTICE

- **Be careful not to twist lead wire.**
- **Set clamps without looseness of lead wire.**

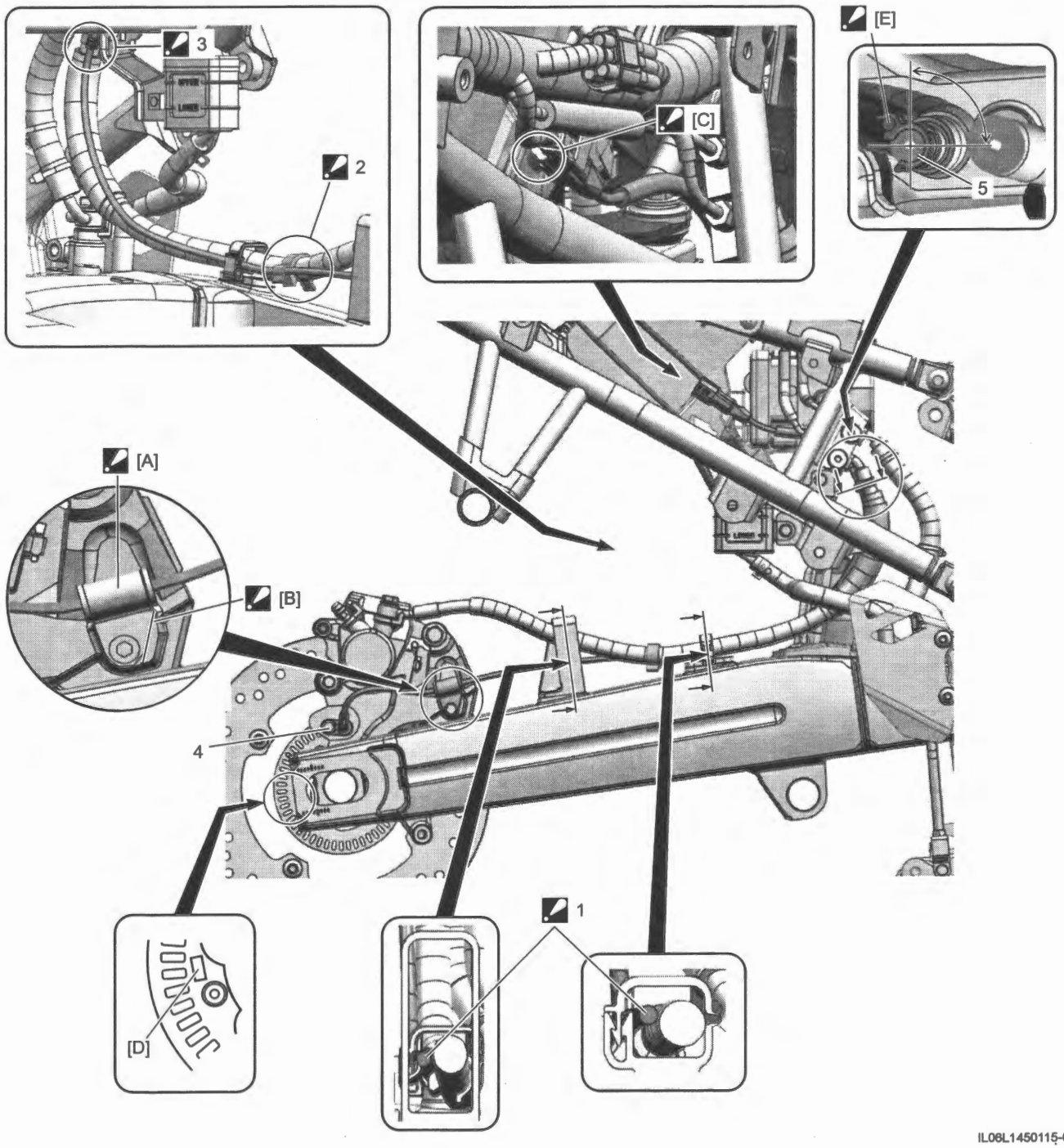

IL06L1450115-02

[A]: Fix the wheel speed sensor lead wire sleeve to the clamp firmly.	1. Rear wheel speed sensor lead wire : Pass the rear wheel speed sensor lead wire to inside of the guide.
[B]: After positioning the clamp with the stopper, tighten the bolt.	2. Clamp : Clamp the wheel speed sensor lead wire at inside of the brake hose.
[C]: Insert the fixed clamp of the speed sensor coupler into the hole of the battery holder.	3. Clamp : Clamp the white making of the wheel speed sensor lead wire to inside of the brake hose end fitting.
[D]: Outside marking.	4. Rear wheel speed sensor
[E]: Clamp the wheel speed sensor lead wire to inside and backside of the rear brake hose (5).	5. Rear brake hose

Component Location

ABS Components Location

BENL06L24503001

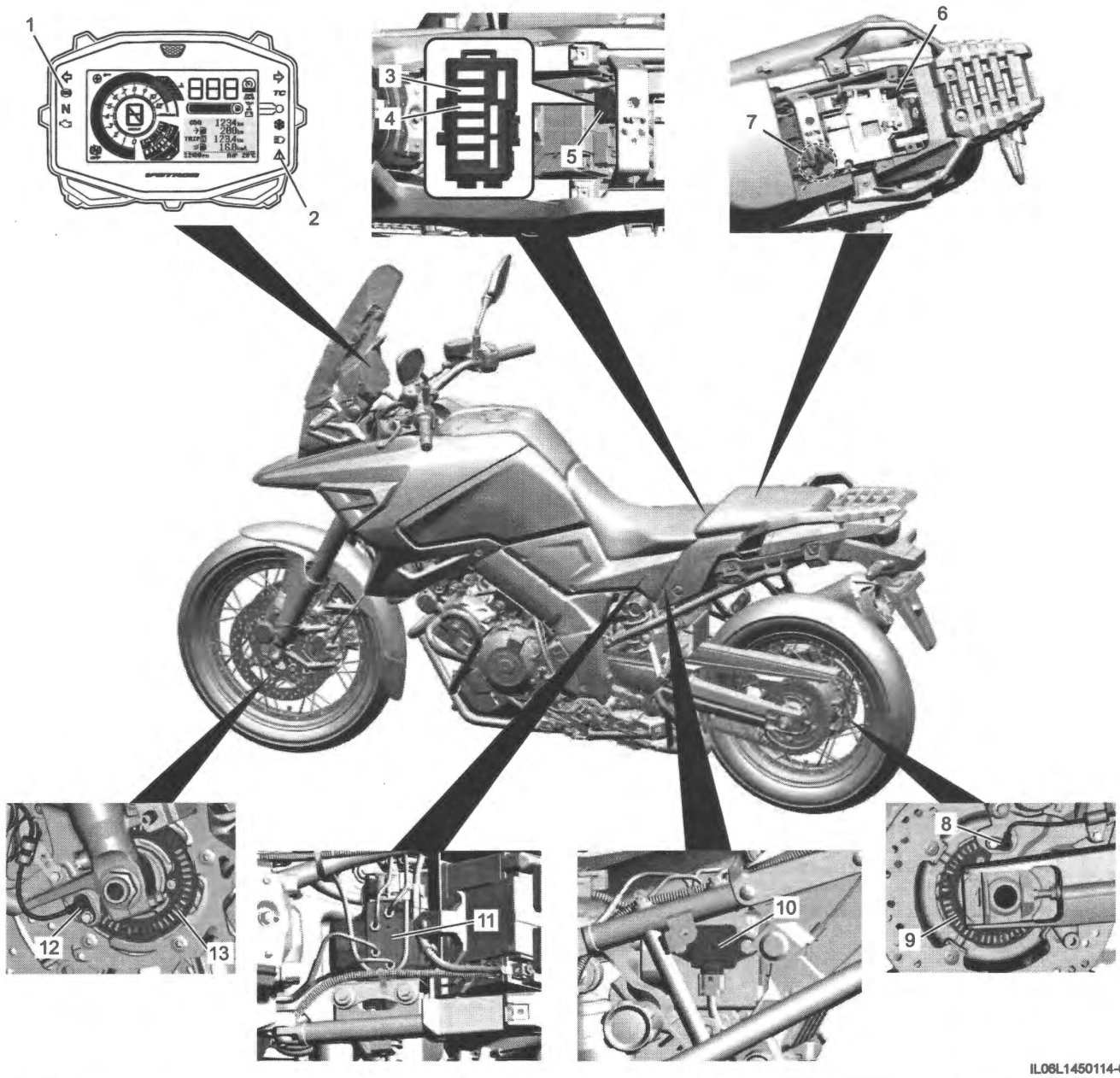

IL06L1450114-02

1. ABS indicator light	6. Mode select coupler (6P)	11. ABS control unit/HU
2. Master warning indicator light	7. Mode select coupler (2P)	12. Front wheel speed sensor
3. ABS motor fuse (25 A)	8. Rear wheel speed sensor	13. Front wheel speed sensor rotor
4. ABS solenoid valve fuse (15 A)	9. Rear wheel speed sensor rotor	
5. Fuse box	10. IMU (With Motion Track Brake System)	

Diagnostic Information and Procedures

ABS Check

BENL06L24504001

Refer to the following items for the details of each step.

Step 1

Customer complaint analysis

1) Perform customer complaint analysis. ☞(Page 4E-13)

Was customer complaint analysis performed?

Yes — Go to Step 2.

No — Perform customer complaint analysis.

Step 2

DTC check

1) Check for DTCs (including pending DTC). ☞(Page 4E-14)

Is there any DTC(s)?

Yes — Print DTCs write down and check and repair according to applicable DTC troubleshooting, and go to Step 5.

No — Go to Step 3.

Step 3

Visual inspection

1) Perform visual inspection. ☞(Page 4E-14)

Is there any faulty condition?

Yes — Repair or replace defective part, and then go to Step 5.

No — Go to Step 4.

Step 4

Trouble symptom confirmation

1) Check trouble symptom. ☞(Page 4E-14)

Is trouble symptom identified?

Yes — Repair or replace defective part, and then go to Step 5.

No — Go to Step 5.

Step 5

ABS hydraulic unit operation check

1) Check ABS hydraulic unit operation. ☞(Page 4E-14)

Is there any abnormal condition?

Yes — Repair or replace the malfunction part, and then go to Step 6.

No — Go to Step 6.

Step 6

Final confirmation test

1) Perform final confirmation test. ☞(Page 4E-14)

Does the trouble recur?

Yes — Go to Step 2.

No — End.

Step 1: Customer Complaint Analysis

Record details of the problem (failure, complaint) and how it occurred as described by the customer. For this purpose, use of such an inspection form such as following will facilitate collecting information to the point required for proper analysis and diagnosis.

NOTE

This form is a standard sample. The form should be modified according to conditions and characteristic of each market.

EXAMPLE: CUSTOMER PROBLEM INSPECTION FORM

User name:	Model:	VIN:	Date of issue:
Date Reg.	Date of problem:	Mileage:	

PROBLEM SYMPTOMS	
ABS operation	Past malfunctions and repairs
ABS does not work	
ABS works so often with	
Too long stopping distance	
Other	

CONDITION WHEN MALFUNCTION OCCURRED	
ABS indicator light	Riding conditions
Does not light up	While stopping
Lights up	Over 5 km/h (3.1 mile/h)
Goes off after running over 5 km/h (3.1 mile/h): Yes / No	When turning
Flashes	Others
Tires	Brake operating conditions
Abnormal air pressure	Usual braking
Less thread depth	Quick/hard braking
No specified tires installed	
	Interface
Road surface	Too big pulsations at brake lever and pedal
Paved road:	Too large brake lever and pedal strokes
Dry / Wet / Others	Others
Unpaved road:	
Gravel / Muddy / Uneven / Others	Others
	Abnormal noise from the ABS control unit/HU
	Skid noise from the calipers
	Vibration at the brake lever and pedal

NOTE:

IE31J1450074-01

Step 2: DTC Check
First, check DTC (including pending DTC). ☞(Page 4E-14)

Step 3: Visual Inspection
As a preliminary step, perform visual check of the items that support proper function of the ABS. ☞(Page 4E-25)

Step 4: Trouble Symptom Confirmation
Based on information obtained in "Step 1: Customer Complaint Analysis" (Page 4E-13), check trouble symptoms.

Step 5: ABS hydraulic unit operation check
Check that the ABS hydraulic operation is normal. ☞(Page 4E-12)

Step 6: Final Confirmation Test
Ride the motorcycle at more than 30 km/h (19 mile/h) and quickly apply the brakes to check that the ABS activates correctly. Confirm that the problem symptom is not observed anymore and ABS is free from any abnormal conditions. If what has been repaired is related to the malfunction DTC, clear the DTC referring to "DTC Clearance" (Page 4E-16) and perform test riding and confirm that the DTC is not indicated.

DTC Check

BENL06L24504002

NOTE

- **Don't disconnect couplers from ABS control unit, the battery cable from the battery, ABS control unit ground wire harness from the main fuse before confirming the DTC stored in memory. Such disconnection will erase the memorized information in ABS control unit memory.**
- **Before proceeding DTC check, read "Self-diagnosis Function" (Page 4E-3) and correctly understand the function and usage.**

Use of SDS-II

1) Turn the ignition switch "OFF".
2) Remove the seat. ☞(Page 9D-27)
3) Connect the conversion cable (ISO) to mode select coupler (6P) (1).
☞(Page 4E-11)

Special tool
(A): 09904–41070

4) Connect the SDS-II to conversion cable (ISO).

Special tool
(B): 09904–41031
09904–41041

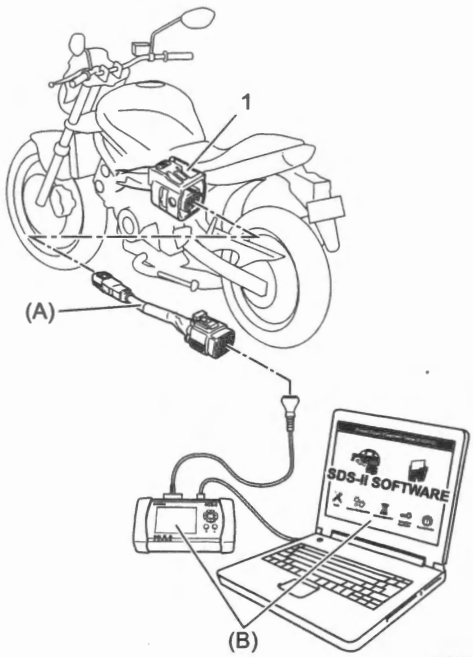

IM27K1450001-01

5) Turn the ignition switch "ON".
6) Read DTC according to instructions displayed on SDS-II and print it or write it down. Refer to Operation Manual of SDS-II for further details.

NOTE

- **Not only SDS-II used for detecting DTCs but also for reproducing and checking on screen the failure condition as described by customers using the trigger.**
- **How to use trigger referring to the SDS-II operation manual for further details.**

7) Close the SDS-II and turn the ignition switch OFF.
8) Disconnect the SDS-II from conversion cable (ISO).
9) Disconnect the conversion cable (ISO) from mode select coupler (6P).
10) Install the removed parts.

Use of Mode Select Switch

How to read the DTC

A two-digit DTC is shown through the flashing pattern of the ABS indicator light. A number between 1 and 9 is represented by the number of times that the ABS indicator light lights up in interval of 0.4 seconds and the separation between the tens and ones are indicated by the light staying off for 1.6 seconds. In addition, the separation between the start code and the DTC is indicated by the light being off for 3.6 seconds. After the start code is displayed, DTCs appear from the smallest number code.

If no DTC is recorded, the light repeats flashing for 3.6 seconds in a cyclic manner.

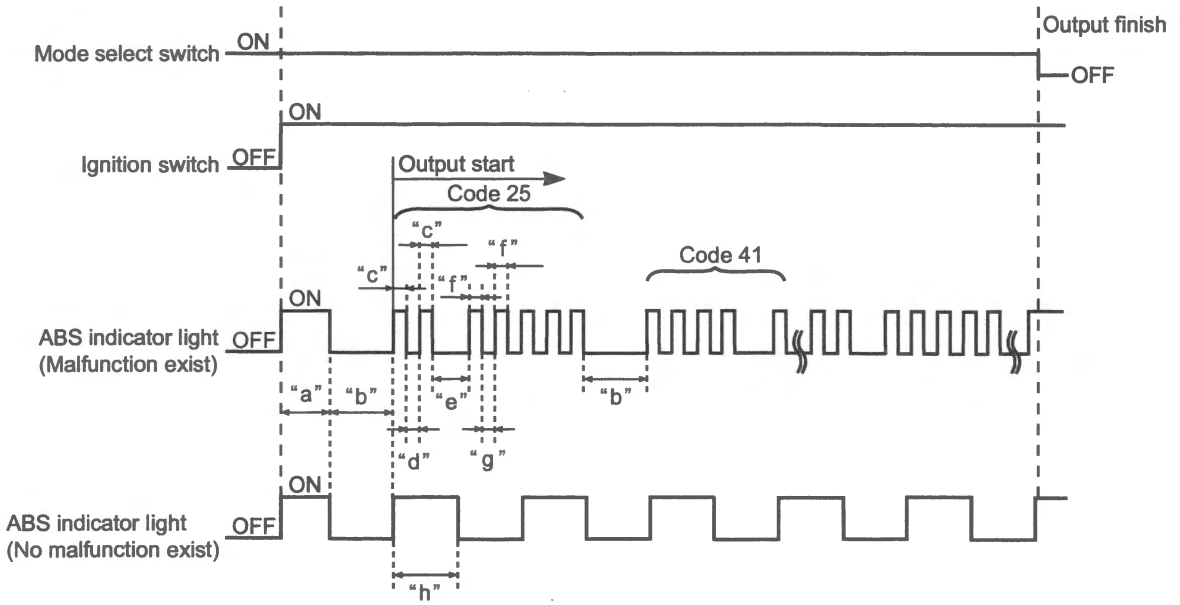

IE31J1450023-02

"a": Initial minimum light ON time (About 2 seconds)	"e": Main-sub code interval (1.6 seconds)
"b": Error code interval (About 3.6 seconds)	"f": Sub code light ON time (0.4 seconds)
"c": Main code light ON time (0.4 seconds)	"g": Sub code light OFF time (0.4 seconds)
"d": Main code light OFF time (0.4 seconds)	"h": About 3.6 seconds

NOTE

In the case of "10", the one place of the cord is shown in alphabet "A".

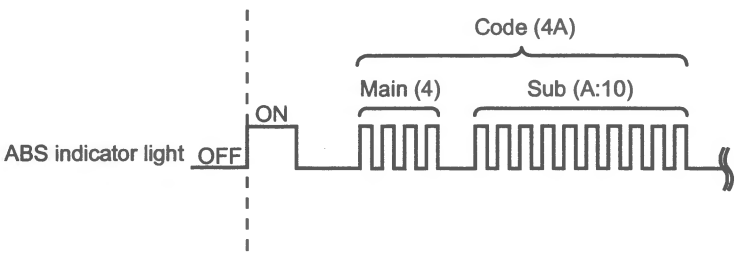

IL08L1450112-01

DTC check

NOTE

Both past DTC and current DTC are detected by using mode select coupler.

Connect the special tool to the mode select coupler to output the memorized DTCs on the ABS indicator light.

1) Turn the ignition switch OFF.
2) Remove the seat. ☞(Page 9D-27)
3) Connect the special tool to the mode select coupler (2P) (1). Refer to "ABS Components Location" (Page 4E-11).

Special tool
(A): 09930–82760

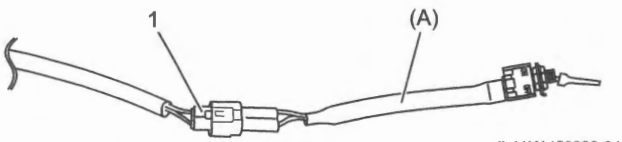

IL41K1450008-04

4) Switch the special tool to ON.



I718H1450040-03

5) Turn the ignition switch ON.
The ABS indicator light (1) starts flashing to indicate the DTC. ☞(Page 4E-19)

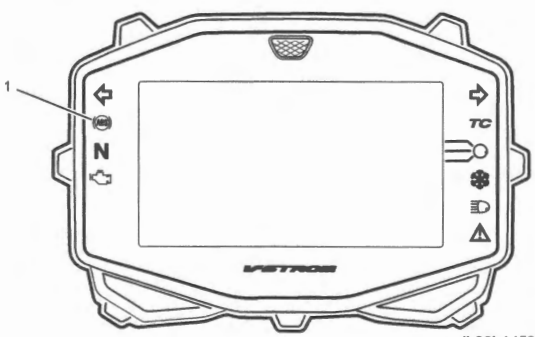

IL06L1450011-01

6) Turn the ignition switch OFF and disconnect the special tool.
7) Install the removed parts.

DTC Clearance

BENL06L24504003

NOTE

- **The previous past DTC still remains stored in the ABS HU. Therefore, erase the past DTC memorized in the ABS control unit using SDS-II.**
- **The DTC is memorized in the ABS control unit also when the wire coupler of any sensor is disconnected. Therefore, when a wire coupler has been disconnected at the time of diagnosis, erase the stored malfunction past DTC.**

Use of SDS-II

1) Turn the ignition switch OFF.
2) Remove the seat. ☞(Page 9D-27)
3) Connect the conversion cable (ISO) to mode select coupler (6P) (1). ☞(Page 4E-11)

Special tool
(A): 09904–41070

4) Connect the SDS-II to conversion cable (ISO).

Special tool
(B): 09904–41031
09904–41041

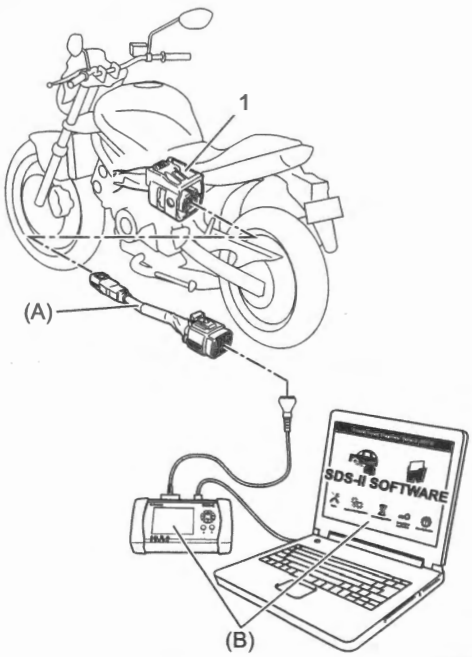

IM27K1450001-01

5) Turn the ignition switch "ON".
6) Clear DTC according to instructions displayed on SDS-II tool. Refer to Operation Manual of SDS-II for further details.
7) After completing the clearance, close the SDS-II and turn the ignition switch "OFF".
8) Disconnect the SDS-II and install the removed parts.

9) Ride the motorcycle at more than 30 km/h (18.6 mile/h) and quickly apply the brakes to check that the ABS activates correctly.

Use of Mode Select Switch
Current DTC

1) After repairing the trouble, turn off the ignition switch.
2) Clear current DTC according to the clearance method of past DTC. ☞(Page 4E-17)
3) Connect the special tool to the mode select coupler (2P) (1). Refer to "ABS Components Location" (Page 4E-11).

Special tool
(A): 09930–82760

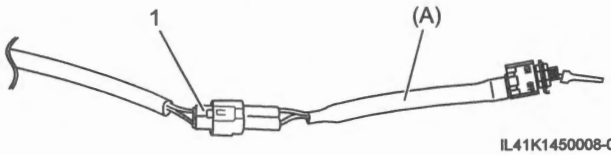

IL41K1450008-04

4) Switch the special tool to ON.



I718H1450040-03

5) Turn the ignition switch ON.
6) When the ABS indicator light turns on and off repeatedly at 3.6 sec intervals, the current DTC has been erased.

Past DTC

1) Turn the ignition switch OFF.
2) Remove the rear seat. ☞(Page 9D-27)
3) Connect the special tool to the mode select coupler (2P) (1). Refer to "ABS Components Location" (Page 4E-11).

Special tool
(A): 09930–82760

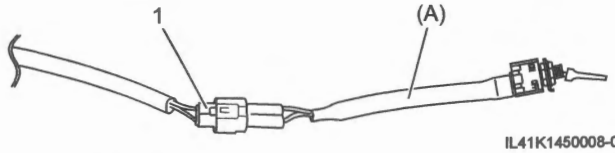

IL41K1450008-04

4) Switch the special tool to ON.



I718H1450040-03

5) Turn the ignition switch ON.
6) Turn the special tool's switch OFF then ON again for more than 1 second. Repeat this operation 3 or more times. When the ABS indicator light turns on and off repeatedly at 3.6 sec intervals, the past DTC is cleared
7) Disconnect the special tool from the mode select coupler and install the removed parts.

ABS Hydraulic Unit Operation Check

BENL06L24504004

NOTE

- **A false diagnosis may result if operation check of the ABS hydraulic unit is performed without satisfying all of the specified condition below.**
  Check that all the following conditions are met before performing operation check of the ABS hydraulic unit.
  - **Battery voltage is 12 V or more.**
  - **No air is trapped in the brake system.**
  - **Brakes do not drag.**
  - **No DTC is stored in ABS hydraulic unit / control module.**
- **Operation check must be performed by 2 persons.**

1) Remove the rear seat. ☞(Page 9D-27)
2) Raise the front and rear wheels off the ground and support the motorcycle with a jack or a wooden block.
3) Shift the transmission into neutral.
4) Set up the SDS-II tool referring to the SDS-II operation manual for further details.
5) Turn the ignition switch ON.
6) Click the "Active control".
7) Click the "ABS HU operating".
8) Perform the following procedures.
   a) Apply the front brake.
   b) Select front wheel by SDS-II tool.
   c) Check whether the front wheel rotates freely by hand due to brake depressurization.
   d) Check the rear wheel in the same manner as described previously.

NOTE

Depressurization by SDS-II tool is available for 5 seconds.

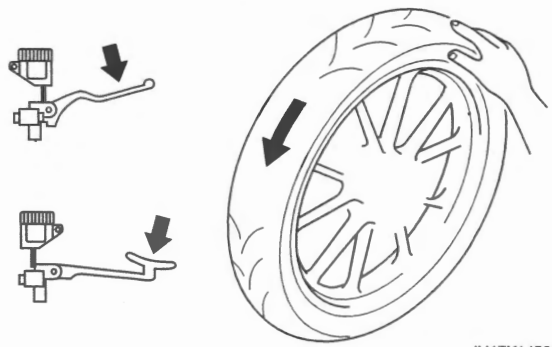

IH17K1450092-01

9) If any faulty condition is found, replace ABS control unit/HU. ☞(Page 4E-54)
10) Close the SDS-II tool and turn the ignition switch OFF.

DTC Table

BENL06L24504005

DTC	Malfunction cause	ABS indicator	Master warning indicator	Reference
None	Normal	ON *1	ON	—
C1625 (25)	Wheel speed sensor related malfunction	ON		☞(Page 4E-29)
C1635 (35)	ABS motor malfunction	ON		☞(Page 4E-30)
C1641 (41)	Wheel speed sensor signal malfunction (F) *2	ON		☞(Page 4E-32)
C1642 (42)	Wheel speed sensor circuit open (F) *2	ON		☞(Page 4E-33)
C1644 (44)	Wheel speed sensor signal malfunction (R) *2	ON		☞(Page 4E-37)
C1645 (45)	Wheel speed sensor circuit open (R) *2	ON		☞(Page 4E-37)
C1647 (47)	Supply voltage (Increased)	ON *3		☞(Page 4E-41)
C1648 (48)	Supply voltage (Decreased)	ON *3		☞(Page 4E-41)
C1649 (49)	CAN high voltage	ON		☞(Page 4E-43)
C164A (4A)	CAN low voltage	ON		☞(Page 4E-43)
C1655 (55)	ABS control unit malfunction	ON *4		☞(Page 4E-44)
C1661 (61)	ABS solenoid malfunction	ON		☞(Page 4E-44)
C1671 (71)	Inertial sensor signal value	ON		☞(Page 4E-46)
C1672 (72)	Inertial sensor open / short	ON		☞(Page 4E-47)
C1681 (81)	ABS pressure sensor	ON		☞(Page 4E-47)
C1682 (82)	CAN IPC	OFF		☞(Page 4E-48)
C1683 (83)	CAN ECM (1)	OFF		☞(Page 4E-48)
U0073 (11)	CAN bus off	ON		☞(Page 4E-48)
U0100 (12)	CAN ECM (2)	OFF		☞(Page 4E-48)
U0123 (13)	CAN (IMU)	ON		☞(Page 4E-48)
U0155 (14)	CAN (meter)	OFF		☞(Page 4E-48)

*1: It goes off after running at more than 5 km/h (3.1 mile/h).
*2: The wheel speed sensor lead wire is connected to the ABS control unit, but a short-circuit or faulty continuity inside the ABS control unit caused this DTC to appear, therefore, the ABS control unit/HU assembly must be replaced. An insufficient wheel speed sensor output voltage is the cause of a malfunction in which the ABS is activated even if the brakes are not suddenly applied. If this occurs frequently even though the wheel speed sensor is operating correctly, the ABS control unit/HU assembly should be replaced.
*3: When the voltage resumes the normal level, the ABS indicator light will go off.
*4: These are times that the ABS indicator light does not light up.

Fail-Safe Table

BENL06L24504006

When any of the following DTCs is detected, ABS control unit enters fail-safe mode and ABS functions are deactivated until ABS control module judges the system is normal.

NOTE

- **○ : Activated**
- **–: Deactivated**
- ***1: The corresponding function is blocked after the end of control.**
- ***2: The control is gradually reduced, and the corresponding function is blocked after the end of control.**
- ***3: The corresponding function is enabled (No cornering function)**
- **Combined brake control, Cornering brake control, Hill hold control, Slope dependant control and Road dependant controls are included in the motion truck brake system model.**

With motion truck brake system

DTC	Fail-safe operation						Fail-safe cancel condition
	ABS	Combined brake control	Cornering brake control	Hill hold control	Slope dependant control	Load dependant control	
C1625 (25)	—	—	—	—	—	—	Turn the ignition OFF and then ON, and perform diagnosis again. (Recovery is not performed based on normal judgment)
C1635 (35)	*1	*2	—	—	—	—	Turn the ignition OFF and then ON, and perform diagnosis again. (Recovery is not performed based on normal judgment) However, the "pump motor power supply voltage monitor error" can be recovered if normal state occurs in the same ignition cycle.
C1641 (41)	—	—	—	—	—	—	Turn the ignition OFF and then ON, and perform diagnosis again. (Recovery is not performed based on normal judgment)
C1642 (42)	—	—	—	—	—	—	Turn the ignition OFF and then ON, and perform diagnosis again. (Recovery is not performed based on normal judgment)
C1644 (44)	—	—	—	—	—	—	Turn the ignition OFF and then ON, and perform diagnosis again. (Recovery is not performed based on normal judgment)
C1645 (45)	—	—	—	—	—	—	Turn the ignition OFF and then ON, and perform diagnosis again. (Recovery is not performed based on normal judgment)
C1647 (47)	—	—	—	—	—	—	Recovery can be performed if normal state occurs in the same ignition cycle.

DTC	Fail-safe operation						Fail-safe cancel condition
	ABS	Combined brake control	Cornering brake control	Hill hold control	Slope dependant control	Load dependant control	
C1648 (48)	—	—	—	—	—	—	Recovery can be performed if normal state occurs in the same ignition cycle.
C1649 (49)	*3	*3	—	—	—	○	Recovery can be performed if normal state occurs in the same ignition cycle.
C164A (4A)	*3	*3	—	—	—	○	Recovery can be performed if normal state occurs in the same ignition cycle.
C1655 (55)	—	—	—	—	—	—	Turn the ignition OFF and then ON, and perform diagnosis again. (Recovery is not performed based on normal judgment)
C1661 (61)	—	—	—	—	—	—	Turn the ignition OFF and then ON, and perform diagnosis again. (Recovery is not performed based on normal judgment)
C1671 (71)	*3	*3	—	—	—	○	Turn the ignition OFF and then ON, and perform diagnosis again. (Recovery is not performed based on normal judgment)
C1672 (72)	*3	*3	—	—	—	○	Turn the ignition OFF and then ON, and perform diagnosis again. (Recovery is not performed based on normal judgment)
C1681 (81)	*1	*2	—	—	—	—	Turn the ignition OFF and then ON, and perform diagnosis again. (Recovery is not performed based on normal judgment)
C1682 (82)	○	○	○	—	○	○	Turn the ignition OFF and then ON, and perform diagnosis again. (Recovery is not performed based on normal judgment)
C1683 (83)	○	○	○	—	○	○	Turn the ignition OFF and then ON, and perform diagnosis again. (Recovery is not performed based on normal judgment)
U0073 (11	*3	*3	—	—	—	*1	Turn the ignition OFF and then ON, and perform diagnosis again. (Recovery is not performed based on normal judgment)
U0100 (12)	○	○	○	—	○	○	Turn the ignition OFF and then ON, and perform diagnosis again. (Recovery is not performed based on normal judgment)

DTC	Fail-safe operation						Fail-safe cancel condition
	ABS	Combined brake control	Cornering brake control	Hill hold control	Slope dependant control	Load dependant control	
U0123 (13)	*3	*3	—	—	—	○	Turn the ignition OFF and then ON, and perform diagnosis again. (Recovery is not performed based on normal judgment)
U0155 (14)	○	○	○	—	○	○	Turn the ignition OFF and then ON, and perform diagnosis again. (Recovery is not performed based on normal judgment)

Without motion truck brake system

DTC	Fail-safe operation	Fail-safe cancel condition
	ABS	
C1625 (25)	—	Turn the ignition OFF and then ON, and perform diagnosis again. (Recovery is not performed based on normal judgment)
C1635 (35)	*1	Turn the ignition OFF and then ON, and perform diagnosis again. (Recovery is not performed based on normal judgment) However, the "pump motor power supply voltage monitor error" can be recovered if normal state occurs in the same ignition cycle.
C1641 (41)	—	Turn the ignition OFF and then ON, and perform diagnosis again. (Recovery is not performed based on normal judgment)
C1642 (42)	—	Turn the ignition OFF and then ON, and perform diagnosis again. (Recovery is not performed based on normal judgment)
C1644 (44)	—	Turn the ignition OFF and then ON, and perform diagnosis again. (Recovery is not performed based on normal judgment)
C1645 (45)	—	Turn the ignition OFF and then ON, and perform diagnosis again. (Recovery is not performed based on normal judgment)
C1647 (47)	—	Recovery can be performed if normal state occurs in the same ignition cycle.
C1648 (48)	—	Recovery can be performed if normal state occurs in the same ignition cycle.
C1655 (55)	—	Turn the ignition OFF and then ON, and perform diagnosis again. (Recovery is not performed based on normal judgment)
C1661 (61)	—	Turn the ignition OFF and then ON, and perform diagnosis again. (Recovery is not performed based on normal judgment)

Scan Tool Data

BENL06L24504007

As the data values are standard values estimated on the basis of values obtained from the new vehicles of the following conditions by using a scan tool, use them as reference values.

- Park vehicle in a flat area.
- Adjust air pressure of all tires to specified value.
- Use new genuine tires and genuine suspension.
- Do not modify suspension.

Even when the vehicle is in good condition, there may be cases where the checked value does not fall within each specified data range. Therefore, judgment as abnormal should not be made by checking with these data alone.

NOTE

If communication between SDS-II and ABS control unit is not possible, perform the following checks:

- **Check DIG cable. If necessary, check DIG cable by substituting a known-good DIG cable.**
- **Check ABS control unit power circuit and ground circuit.**

Scan tool data	Vehicle condition		Condition / Reference value
Wheel speed sensor (F)	At stop (Stationary vehicle)		0 km/h (0 mph)
	Turn a wheel		Numerical value increases
Wheel speed sensor (R)	At stop (Stationary vehicle)		0 km/h (0 mph)
	Turn a wheel		Numerical value increases
IG monitoring voltage	Ignition "ON" (Engine stopped)		Battery voltage
Inertial sensor Output Ox	Static	Side-stand position with steering fully turn to left side	3.12 to -3.12 deg/s
	Dynamic	Raise to upright position from side-stand position (While raising)	Numerical Value increases to the positive side
Inertial sensor Output Oy	Static	Side-stand position with steering fully turn to left side	3.12 to -3.12 deg/s
	Dynamic	Raise to upright position from side-stand position (While raising)	Numerical Value increases to the positive side
Inertial sensor Output Oz	Static	Side-stand position with steering fully turn to left side	3.12 to -3.12 deg/s
	Dynamic	Raise to upright position from side-stand position (While raising)	Numerical Value increases to the positive or negative side
Inertial sensor Output Ax Axis	Side-stand position with steering fully turn to left side		10.92 to 8.63 m/s^2
	Upright position		Numerical Value increases to the positive side
Inertial sensor Output Ay Axis	Side-stand position with steering fully turn to left side		1.36 to -1.72 m/s^2
	Upright position		Numerical Value increases to the positive side
Inertial sensor Output Az Axis	Side-stand position with steering fully turn to left side		-0.97 to -4.02 m/s^2
	Upright position		Numerical Value increases to the positive side
Pressure sensor Output caliper (R)	Not brake pedal operating		0.0 Mpa
	Brake pedal operating		Numerical value increases
ABS solenoid Input Voltage open or shorted (F)	Ignition "ON" (Engine stopped)		Normal

Scan tool data	Vehicle condition	Condition / Reference value
ABS solenoid Output Voltage open or shorted (F)	Ignition "ON" (Engine stopped)	Normal
ABS solenoid Input Voltage open or shorted (R)	Ignition "ON" (Engine stopped)	Normal
ABS solenoid Output Voltage open or shorted (R)	Ignition "ON" (Engine stopped)	Normal
ABS solenoid valve relay lock	Ignition "ON" (Engine stopped)	Normal
Solenoid pilot valve (R) open or short circuit	Ignition "ON" (Engine stopped)	Normal
Solenoid high pressure switching valve (R) open or short circuit	Ignition "ON" (Engine stopped)	Normal
ABS motor	Ignition "ON" (Engine stopped)	Normal
ABS motor relay lock (OFF)	Ignition "ON" (Engine stopped)	Normal
ABS motor relay lock (ON)	Ignition "ON" (Engine stopped)	Normal
Service check signal condition	Ignition "ON" (Engine stopped)	OFF
ABS motor	Ignition "ON" (Engine stopped)	OFF
ABS solenoid valve relay	Ignition "ON" (Engine stopped)	ON
ABS solenoid IN/V (F)	Ignition "ON" (Engine stopped)	OFF
ABS solenoid OUT/V (F)	Ignition "ON" (Engine stopped)	OFF
Pilot valve (R)	Ignition "ON" (Engine stopped)	OFF
High pressure switching valve (R)	Ignition "ON" (Engine stopped)	OFF
ABS solenoid IN/V (R)	Ignition "ON" (Engine stopped)	OFF
ABS solenoid OUT/V (R)	Ignition "ON" (Engine stopped)	OFF
Pressure sensor master cylinder side (F) open or short circuit	Ignition "ON" (Engine stopped)	Normal
Pressure sensor caliper side (F) open or short circuit	Ignition "ON" (Engine stopped)	Normal
Pressure sensor master cylinder side (R) open or short circuit	Ignition "ON" (Engine stopped)	Normal
Pressure sensor caliper side (R) open or short circuit	Ignition "ON" (Engine stopped)	Normal

Visual Inspection

BENL06L24504008

Check the following parts and systems visually.

Inspection Item		Referring Section
Connectors of electric wire harness	Disconnection, friction	"Precautions for Electrical Circuit Service" in Section 00 (Page 00-2)
Fuses	Burning	"Precautions for Electrical Circuit Service" in Section 00 (Page 00-2)
Brake pad	Worn	"Front Brake Pad Inspection" in Section 4B (Page 4B-2) "Rear Brake Pad Inspection" in Section 4C (Page 4C-2)
Brake fluid	Level, leakage	"Brake Fluid Level Check" in Section 4A (Page 4A-11)
ABS indicator light	Operation	"ABS Indicator Light Inspection" (Page 4E-25)
Master Warning Indicator Light	Operation	"Master Warning Indicator Light Inspection" in Section 1A (Page 1A-30)
Tire	Pressure	"Tire Inspection and Cleaning" in Section 2D (Page 2D-19)
	Type, size	
	Damage, wear	
Wheel	Runout, play	"Wheel / Wheel Axle Inspection" in Section 2D (Page 2D-15)
Wheel speed sensor	Damage, wear	"Wheel Speed Sensor and Sensor Rotor Inspection" (Page 4E-58)
Wheel speed sensor rotor	Damage, wear	
Other parts that can be checked visually		—

ABS Symptom Diagnosis

BENL06L24504009

Condition	Possible cause	Correction / Reference Item
The ABS indicator light keeps lighting up even though the motorcycle is ridden at more than 5 km/h (3.1 mile/h).	Malfunctioning the ABS function.	*Perform the ABS check. ☞(Page 4E-12)*
	Malfunctioning the ABS indicator light circuit.	*Check the ABS indicator light circuit. ☞(Page 4E-25)*
The ABS indicator light does not light up when turning the ignition switch to ON.	Malfunctioning the ABS function.	*Perform the ABS check. ☞(Page 4E-12)*
	Malfunctioning the ABS indicator light circuit.	*Check the ABS indicator light circuit. ☞(Page 4E-25)*
	Malfunctioning the combination meter.	*Check the combination meter. ☞(Page 9C-10)*

ABS Indicator Light Inspection

BENL06L24504010

Wiring Diagram

Refer to "ABS Circuit Diagram" (Page 4E-5).

Troubleshooting (With motion truck brake system)

Step 1

1) Check if the ABS indicator light (1) lights up when turning the ignition switch ON.

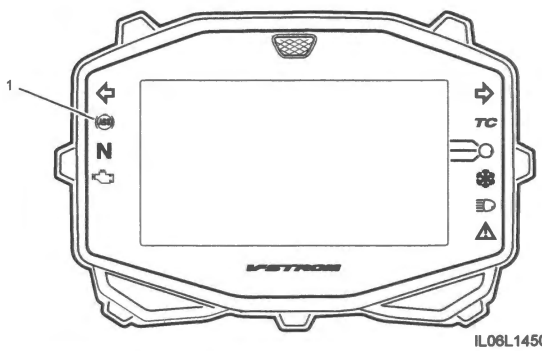

IL06L1450012-01

Does the ABS indicator light up?

Yes Go to Step 2.

No Go to Step 3.

Step 2

(The ABS indicator light lights up)

1) Ride the motorcycle at more than 5 km/h (3 mile/h).

Does the ABS indicator light go off?

Yes — Normal (No DTC exists)

No
- DTC output. ☞(Page 4E-14)
- If DTC can not be output (the ABS indicator light does not flash), go to Step 6.

Step 3

(The ABS indicator light does not light up)

1) Turn the ignition switch OFF.
2) Remove the seat.
3) Open the fuse box and inspect the signal fuse (15 A) (1).

NOTE

If a fuse is blown, find the cause of the problem and correct it before replacing the fuse.

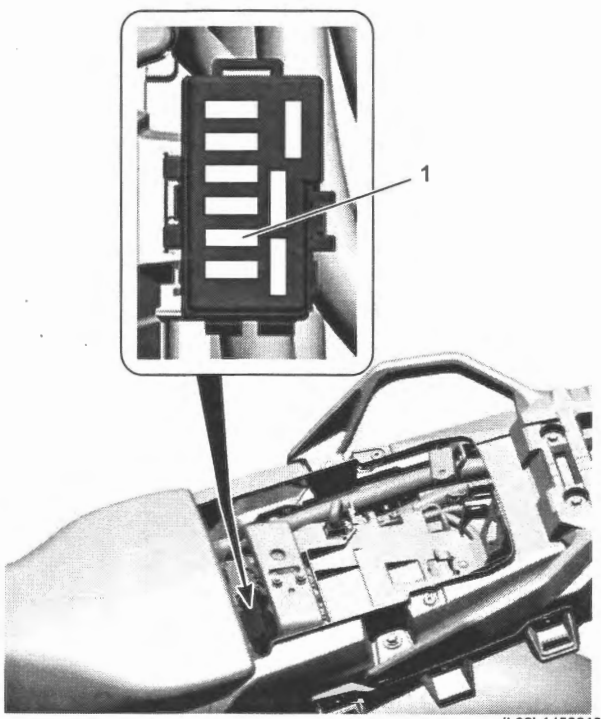

IL06L1450013-01

Is the signal fuse OK?

Yes — Go to Step 4.

No — Replace the signal fuse.

Step 4

1) Disconnect the ABS control unit coupler. ☞(Page 4E-54)
2) Turn the ignition switch ON with the ABS control unit coupler disconnected, measure the voltage between "T12" and "T10" at the coupler.

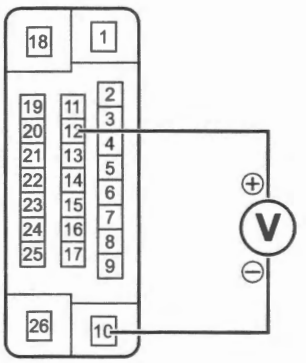

IL06L1450014-01

Is voltage 7.5 – 9.5 V?

Yes — Go to Step 5.

No
- Repair or replace the defective wire harness. (Faulty indicator light wire or ground wire)
- Faulty combination meter.

Step 5

1) Turn the ignition switch OFF.
2) Check for continuity between "T10" at the coupler and body ground.

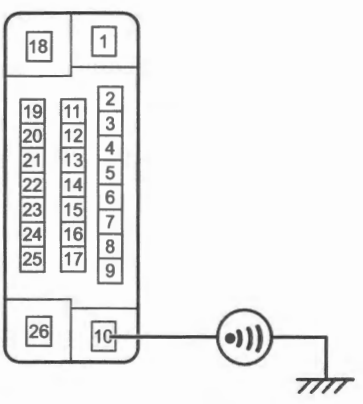

IL06L1450015-01

Is continuity indicated?

Yes — Replace the ABS control unit/HU. ☞(Page 4E-54)

No — Repair the wire harness. (Faulty ground wire)

Step 6

(The ABS indicator light does not go off)

1) Turn the ignition switch OFF.
2) Remove the seat. ☞(Page 9D-27)
3) Short the mode select coupler terminals using the special tool. Refer to "ABS Components Location" (Page 4E-11).

Special tool
(A): 09930–82760

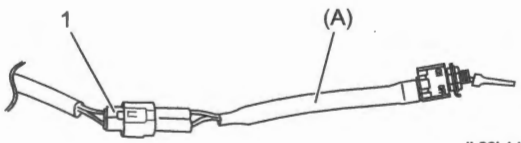

IL06L1450016-01

4) Check for continuity between "T20" and "T10" at the coupler.

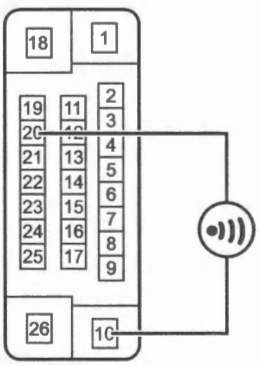

IL06L1450017-01

Is continuity indicated?

Yes — Yes Repair the ABS control unit/HU. ☞(Page 4E-54)

No — Repair the wire harness. (Faulty mode select coupler wire)

Troubleshooting (Without motion truck brake system)

Step 1

1) Check if the ABS indicator light (1) lights up when turning the ignition switch ON.

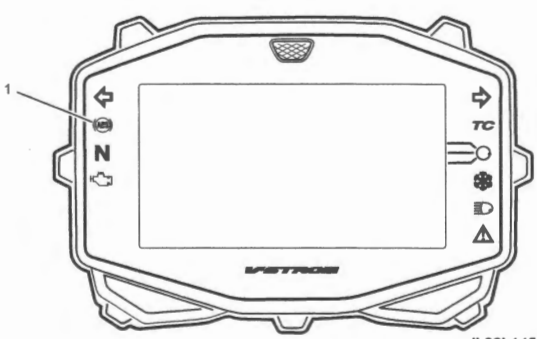

IL06L1450018-01

Does the ABS indicator light up?

Yes — Go to Step 2.

No — Go to Step 3.

Step 2

(The ABS indicator light lights up)

1) Ride the motorcycle at more than 5 km/h (3 mile/h).

Does the ABS indicator light go off?

Yes — Normal (No DTC exists)

No —
- DTC output. ☞(Page 4E-14)
- If DTC can not be output (the ABS indicator light does not flash), go to Step 6.

Step 3

(The ABS indicator light does not light up)

1) Turn the ignition switch OFF.
2) Remove the seat.
3) Open the fuse box and inspect the signal fuse (15 A) (1).

NOTE

If a fuse is blown, find the cause of the problem and correct it before replacing the fuse.

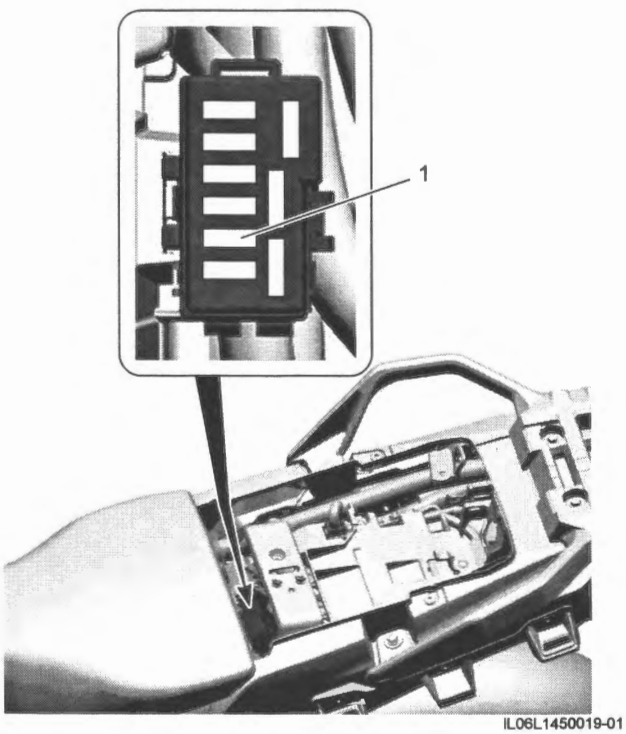

IL06L1450019-01

Is the signal fuse OK?

Yes — Go to Step 4.

No — Replace the signal fuse.

Step 4

1) Disconnect the ABS control unit coupler. ☞(Page 4E-54)
2) Turn the ignition switch ON with the ABS control unit coupler disconnected, measure the voltage between "T11" and "T9" at the coupler.

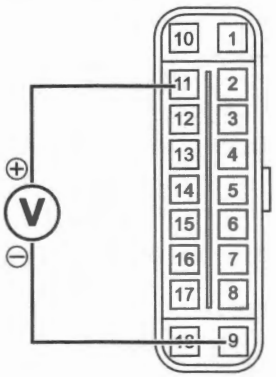

IL06L1450020-02

Is voltage 7.5 - 9.5 V?

Yes — Go to Step 5.

No
- Repair the wire harness. (Faulty indicator light wire or ground wire)
- Faulty combination meter.

Step 5

1) Turn the ignition switch OFF.
2) Check for continuity between "T9" at the coupler and body ground.

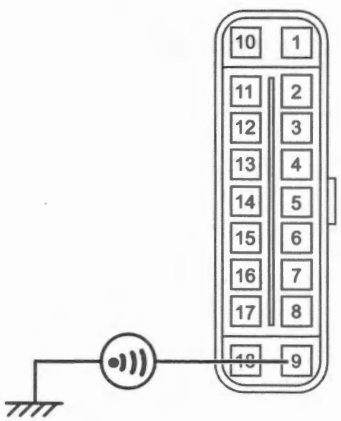

IL06L1450021-02

Is continuity indicated?

Yes — Replace the ABS control unit/HU. ☞(Page 4E-54)

No — Repair the wire harness. (Faulty ground wire)

Step 6

(The ABS indicator light does not go off)

1) Turn the ignition switch OFF.
2) Remove the seat. ☞(Page 9D-27)
3) Short the mode select coupler terminals using the special tool. Refer to "ABS Components Location" (Page 4E-11).

Special tool
09930–82760



IL06L1450022-01

4) Check for continuity between "T3" and "T9" at the coupler.

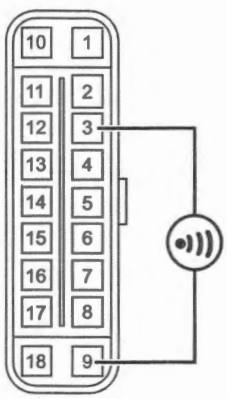

IL06L1450023-02

Is continuity indicated?

Yes — Repair the ABS control unit/HU. ☞(Page 4E-54)

No — Repair the wire harness. (Faulty mode select coupler wire)

Master Warning Indicator Light Inspection

BENL06L24504011

Refer to "Master Warning Indicator Light Inspection" in Section 1A (Page 1A-30).

DTC C1625 (25)

BENL06L24504012

Possible Cause
Wheel Speed Sensor Related Malfunction Incorrect tire size, poor tire pressure, deformed wheel, wheel spinning, incorrect tooth count, interference at one or more wheels, permanent bad signal, etc.

Troubleshooting

Step 1

1) Check that the specified tires are installed. ☞(Page 0B-25)

Are the tires OK?

Yes Go to Step 2.

No Use the specified tires.

Step 2

1) Make sure the tire pressure for each tire. ☞(Page 0B-25)

Is the tire pressure for each tire correct?

Yes Go to Step 3.

No Adjust the tire pressure.

Step 3

1) Inspect both wheel speed sensor rotors for damage and check that no foreign objects are caught in the rotor openings.

Are the rotors OK?

Yes Go to Step 4.

No Clean or replace the rotor.

- Front wheel speed sensor rotor. ☞(Page 4E-57)
- Rear wheel speed sensor rotor. ☞(Page 4E-58)

Step 4

1) Inspect the clearances of the front and rear wheel speed sensor – sensor rotor using the thickness gauge. ☞(Page 4E-58)

Are the clearances OK?

Yes Replace the ABS control unit/HU. ☞(Page 4E-54)

No Find and repair the cause. ☞(Page 4E-58)

DTC C1635 (35)

BENL06L24504013

Possible Cause
ABS Motor Malfunction Motor relay circuit open or short, broken fuse for motor relay, pump motor circuit open or short, faulty motor relay, faulty ABS motor, faulty ABS control unit, etc.

Wiring Diagram
Refer to "ABS Circuit Diagram" (Page 4E-5).

Troubleshooting (With motion truck brake system)

Step 1

1) Turn the ignition switch OFF.
2) Remove the rear seat.
3) Open the fuse box and inspect the ABS motor fuse (25 A) (1). Refer to "ABS Components Location" (Page 4E-11).

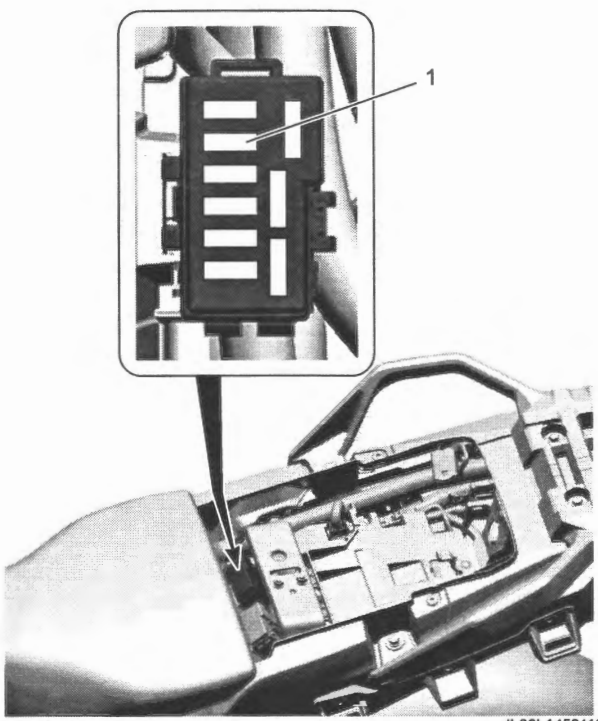

IL06L1450113-02

NOTE

If a fuse is blown, find the cause of the problem and correct it before replacing the fuse.

Is the ABS motor fuse OK?

Yes — Go to Step 3.

No — Go to Step 2.

Step 2

1) Remove the ABS motor fuse.
2) Disconnect the ABS control unit coupler. ☞(Page 4E-54)
3) Measure the continuity between "T18" at the coupler and ground.

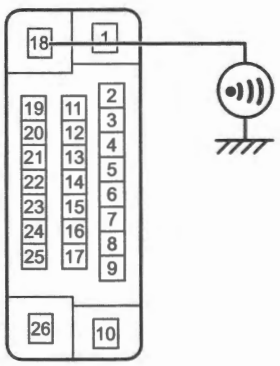

IL06L1450024-01

Is no continuity indicated?

Yes — Faulty ABS control unit/HU. Replace the ABS control unit/HU. ☞(Page 4E-54)

No — Repair the wire harness. (Faulty "T18" wire)

Step 3

1) Check the ABS control unit coupler (1) for loose or poor contacts. If OK, then disconnect the ABS control unit coupler. ☞(Page 4E-54)

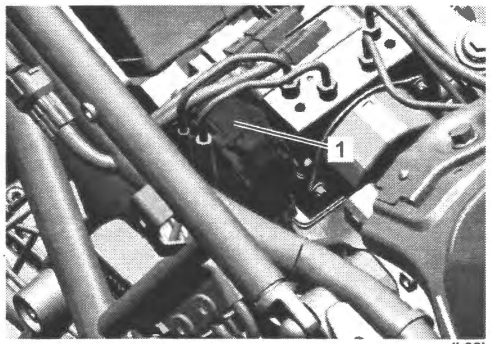

IL06L1450025-01

2) Measure the voltage between "T18" and "T26" at the coupler.

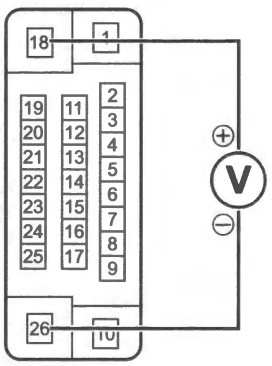

IL06L1450026-01

Is voltage 12.0 V or more?

Yes — Replace the ABS control unit/HU. ☞(Page 4E-54)

No — Repair the wire harness. (Faulty "T18" or "T26" wire)

Troubleshooting (Without motion truck brake system)

Step 1

1) Turn the ignition switch OFF.
2) Remove the rear seat.
3) Open the fuse box and inspect the ABS motor fuse (25 A) (1). Refer to "ABS Components Location" (Page 4E-11).

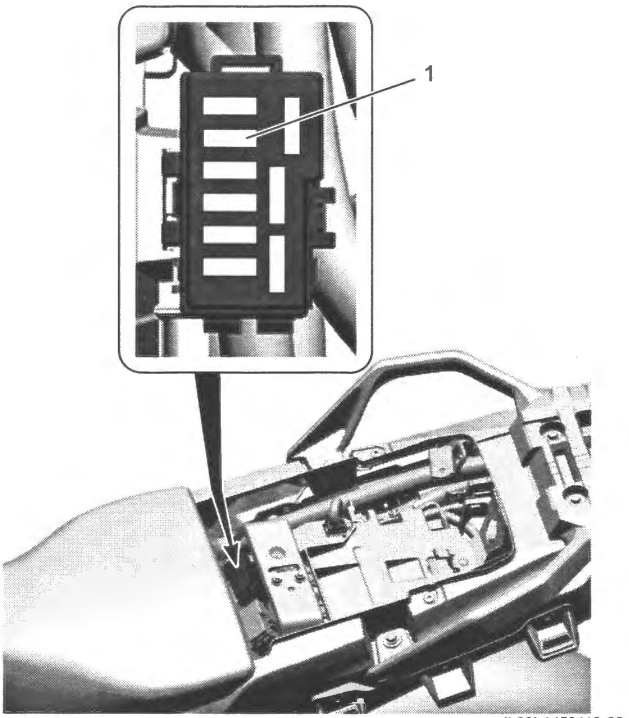

IL06L1450113-02

NOTE

If a fuse is blown, find the cause of the problem and correct it before replacing the fuse.

Is the ABS motor fuse OK?

Yes — Go to Step 3.

No — Go to Step 2.

Step 2

1) Remove the ABS motor fuse.
2) Disconnect the ABS control unit coupler. ☞(Page 4E-54)
3) Measure the continuity between "T10" at the coupler and ground.

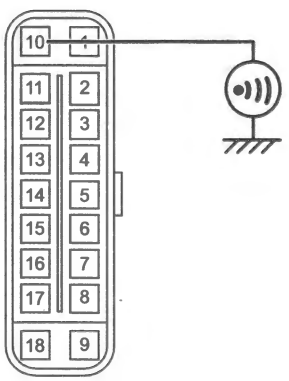

IL06L1450028-01

Is no continuity indicated?

Yes — Faulty ABS control unit/HU.

No Repair or replace the defective wire harness. (Faulty "T10" wire)

Step 3

1) Check the ABS control unit coupler (1) for loose or poor contacts. If OK, then disconnect the ABS control unit coupler. ☞(Page 4E-54)

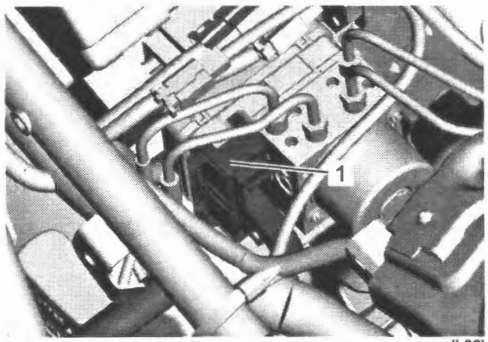

IL06L1450030-01

2) Measure the voltage between "T10" and "T18" at the coupler.

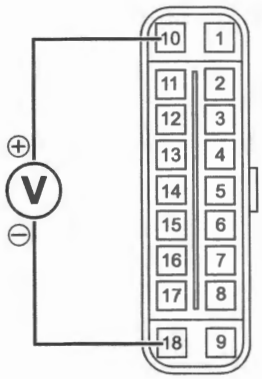

IL06L1450031-01

Is voltage 12.0 V or more?

Yes Faulty ABS control unit/HU.

No Repair or replace the defective wire harness. (Faulty "T10" or "T18" wire)

DTC C1641 (41)

BENL06L24504014

Possible Cause
Wheel Speed Sensor Signal Malfunction (F) Too great air gap, worn or missing teeth, noise, interference between lines, loose contact in wheel speed sensor connector, wheel speed sensor not securely fastened, input amplifier in wheel speed sensor connector, input amplifier in ABS control unit failure, etc.

Troubleshooting

Step 1

1) Inspect the clearance between the front wheel speed sensor and sensor rotor using the thickness gauge. ☞(Page 4E-58)

Is the clearance OK?

Yes Go to Step 2.

No Find and repair the cause. ☞(Page 4E-58)

Step 2

1) Inspect the front wheel speed sensor rotor for damage and check that no foreign objects are caught in the rotor openings.

Is the sensor rotor OK?

Yes Go to Step 3.

No Clean or replace the sensor rotor. ☞(Page 4E-57)

Step 3

1) Check that the front wheel speed sensor (1) is mounted securely.

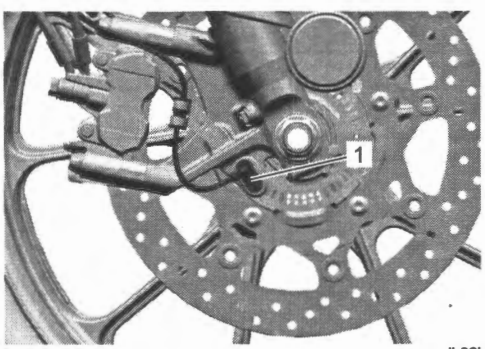

IL06L1450032-01

Is the sensor mounted securely?

Yes Go to DTC C1642. ☞(Page 4E-33)

No Tighten the mounting bolt.

DTC C1642 (42)

BENL06L24504015

Possible Cause
Wheel Speed Sensor Circuit Open (F) Wheel speed sensor circuit open or short, loosen contact in wheel speed sensor connector, input amplifier in ABS control unit failure, etc.

Wiring Diagram
Refer to "ABS Circuit Diagram" (Page 4E-5).

Troubleshooting (With motion truck brake system)

Step 1

1) Turn ignition switch OFF.
2) Remove the air cleaner box. ☞(Page 1D-6)
3) Remove the seat bridge. ☞(Page 4E-54).
4) Check the ABS control unit coupler (1) and front wheel speed sensor coupler (2) for loose or poor contacts. If OK, then disconnect the ABS control unit coupler.

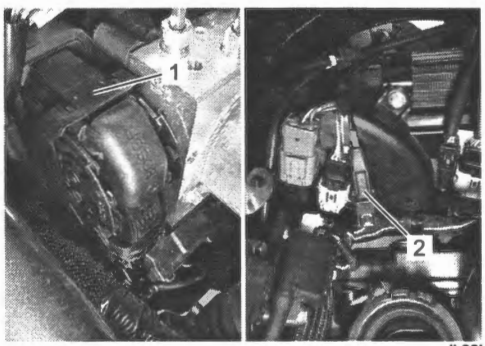

IL06L1450033-01

5) Check for continuity between "T16" and "T8" at the ABS control unit coupler.

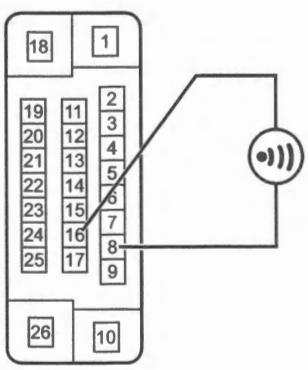

IL06L1450034-01

Is no continuity indicated?

Yes — Go to Step 2.

No
- Repair or replace the defective wire harness. (Faulty sensor wire)
- Faulty front wheel speed sensor. ☞(Page 4E-56)

Step 2

1) Check for continuity between "T16" and ground at the ABS control unit coupler.

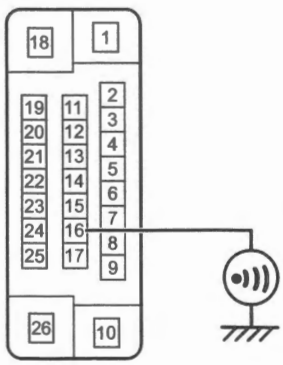

IL06L1450035-01

Is no continuity indicated?

Yes — Go to Step 4.

No — Go to Step 3.

Step 3

1) Disconnect the front wheel speed sensor coupler.
2) Check for continuity between power supply terminal "T1" and ground at the front wheel speed sensor coupler.

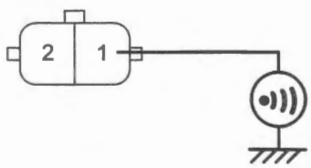

IL06L1450036-01

Is no continuity indicated?

Yes — Repair or replace the defective wire harness. (Faulty "T16" wire at the ABS control unit coupler)

No — Faulty front wheel speed sensor. ☞(Page 4E-56)

Step 4

1) Check for continuity between "T8" and ground at the ABS control unit coupler.

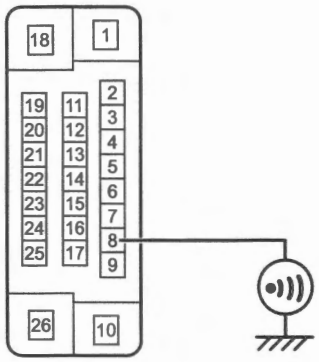

IL06L1450037-01

Is no continuity indicated?

Yes Go to Step 6.

No Go to Step 5.

Step 5

1) Disconnect the front wheel speed sensor coupler.
2) Check for continuity between "T2" wire and ground at the front wheel speed sensor coupler.

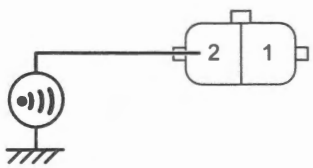

IL06L1450038-01

Is no continuity indicated?

Yes Repair or replace the defective wire harness. (Faulty "T8" wire at the ABS control unit coupler)

No Faulty front wheel speed sensor. ☞(Page 4E-56)

Step 6

1) Disconnect the front wheel speed sensor coupler.
2) Check for continuity between "T16" on the ABS control unit coupler and "T1" wire on the front wheel speed sensor coupler.
3) Check for continuity between "T8" on the ABS control unit coupler and "T2" wire on the front wheel speed sensor coupler.

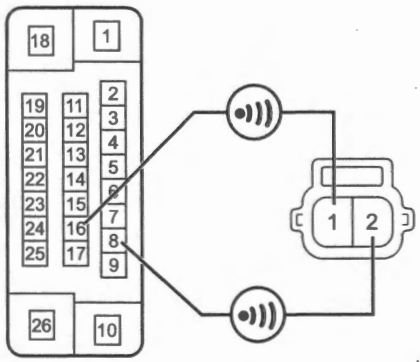

IL06L1450039-01

Is continuity indicated?

Yes Go to Step 7.

No Repair or replace the defective wire harness.

Step 7

1) Measure the front wheel speed sensor current. Refer to "Wheel Speed Sensor Current" under "Wheel Speed Sensor and Sensor Rotor Inspection" (Page 4E-58).

Is current result OK?

Yes Replace the ABS control unit/HU. ☞(Page 4E-54)

No Replace the front wheel speed sensor. ☞(Page 4E-56)

Troubleshooting (Without motion truck brake system)

Step 1

1) Turn ignition switch OFF.
2) Remove the air cleaner box. ☞(Page 1D-6)
3) Remove the seat bridge. ☞(Page 4E-54).
4) Check the ABS control unit coupler (1) and front wheel speed sensor coupler (2) for loose or poor contacts. If OK, then disconnect the ABS control unit coupler.

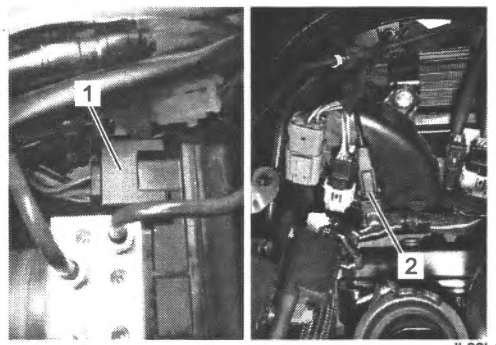

IL06L1450117-01

5) Check for continuity between "T16" and "T7" at the ABS control unit coupler.

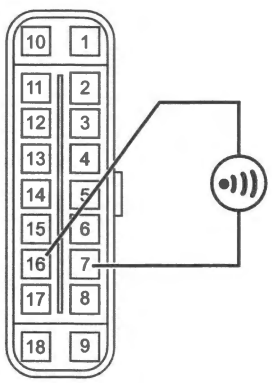

IL06L1450041-01

Is no continuity indicated?

Yes — Go to Step 2.

No
- Repair or replace the defective wire harness. (Faulty sensor wire)
- Faulty front wheel speed sensor. ☞(Page 4E-56)

Step 2

1) Check for continuity between "T16" and ground at the ABS control unit coupler.

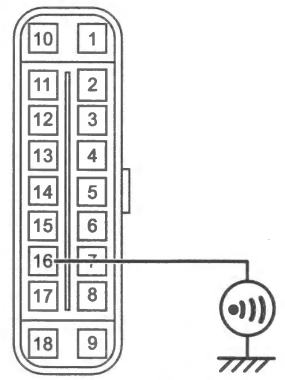

IL06L1450042-01

Is no continuity indicated?

Yes — Go to Step 4.

No — Go to Step 3.

Step 3

1) Disconnect the front wheel speed sensor coupler.
2) Check for continuity between "T1" and ground at the front wheel speed sensor coupler.

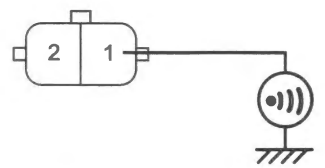

IL06L1450043-01

Is no continuity indicated?

Yes — Repair or replace the defective wire harness. (Faulty "T16" wire at the ABS control unit coupler)

No — Faulty front wheel speed sensor. ☞(Page 4E-56)

Step 4

1) Check for continuity between "T7" and ground at the ABS control unit coupler.

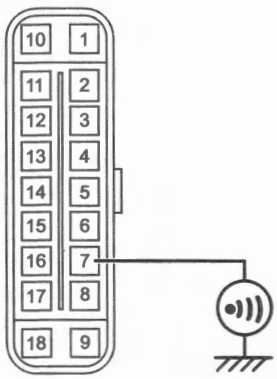

IL06L1450044-01

Is no continuity indicated?

Yes Go to Step 6.

No Go to Step 5.

Step 5

1) Disconnect the front wheel speed sensor coupler.
2) Check for continuity between "T2" and ground at the front wheel speed sensor coupler.

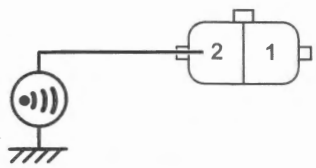

IL06L1450045-01

Is no continuity indicated?

Yes Inspect the wire harness. (Faulty "T7" wire at the ABS control unit coupler)

No Faulty front wheel speed sensor. ☞(Page 4E-56)

Step 6

1) Disconnect the front wheel speed sensor coupler.
2) Check for continuity between "T16" on the ABS control unit coupler and "T1" on the front wheel speed sensor coupler.
3) Check for continuity between "T7" on the ABS control unit coupler and "T2" on the front wheel speed sensor coupler.

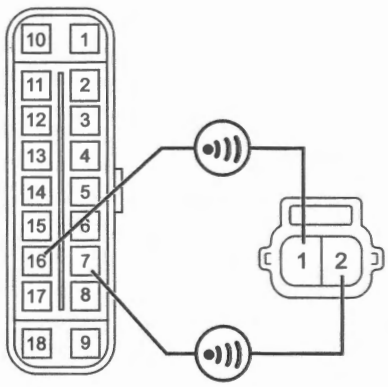

IL06L1450046-01

Is continuity indicated?

Yes Go to Step 7.

No Repair or replace the defective wire harness.

Step 7

1) Measure the front wheel speed sensor current. Refer to "Wheel Speed Sensor Current" under "Wheel Speed Sensor and Sensor Rotor Inspection" (Page 4E-58).

Is current result OK?

Yes Replace the ABS control unit/HU. ☞(Page 4E-54)

No Replace the front wheel speed sensor. ☞(Page 4E-56)

DTC C1644 (44)

BENL06L24504016

Possible Cause
Wheel Speed Sensor Signal Malfunction (R) Too great air gap, worn or missing teeth, noise, interference between lines, loose contact in wheel speed sensor connector, wheel speed sensor not securely fastened, input amplifier in ABS control unit failure, etc.

Troubleshooting

Step 1

1) Inspect the clearance between the rear wheel speed sensor and sensor rotor using the thickness gauge. ☞(Page 4E-58)

Is the clearance OK?

Yes Go to Step 2.

No Adjust the clearance.

Step 2

1) Inspect the rear wheel speed sensor rotor for damage and check that no foreign objects are caught in the rotor openings.

Is the sensor rotor OK?

Yes Go to Step 3.

No Clean or replace the sensor rotor. ☞(Page 4E-58)

Step 3

1) Check that the rear wheel speed sensor (1) is mounted securely.

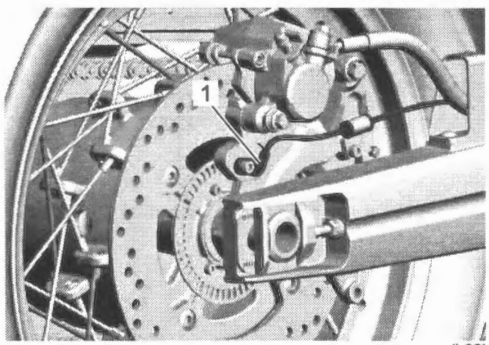

IL06L1450047-01

Is the sensor mounted securely?

Yes Go to DTC C1645 (45). ☞(Page 4E-37)

No Tighten the mounting bolt.

DTC C1645 (45)

BENL06L24504017

Possible Cause
Wheel Speed Sensor Circuit Open (R) Wheel speed sensor circuit open or short, loosen contact in wheel speed sensor connector, input amplifier in ABS control unit failure, etc.

Wiring Diagram

Refer to "ABS Circuit Diagram" (Page 4E-5).

Troubleshooting (With motion truck brake system)

Step 1

1) Turn ignition switch OFF.
2) Check the ABS control unit coupler (1) and rear wheel speed sensor coupler (2) for loose or poor contacts. If OK, then disconnect the ABS control unit coupler.
   - Rear wheel speed sensor coupler: ☞(Page 4E-57)
   - ABS control unit coupler: ☞(Page 4E-54)

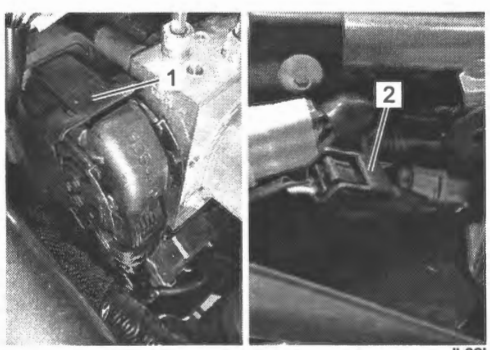

IL06L1450048-01

3) Check for continuity between "T7" and "T15" at the ABS control unit coupler.

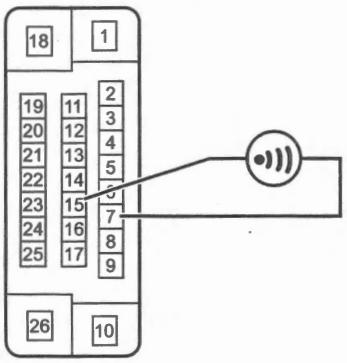

IL06L1450049-01

Is no continuity indicated?

Yes — Go to Step 2.

No
- Repair or replace the defective wire harness. (Faulty sensor wire)
- Faulty rear wheel speed sensor. ☞(Page 4E-57)

Step 2

1) Check for continuity between "T7" and ground at the ABS control unit coupler.

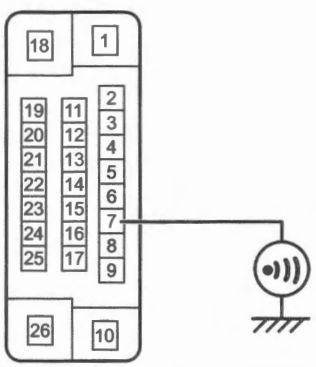

IL06L1450050-01

Is no continuity indicated?

Yes — Go to Step 4.

No — Go to Step 3.

Step 3

1) Disconnect the rear wheel speed sensor coupler.
2) Check for continuity between "T1" and ground at the rear wheel speed sensor coupler.

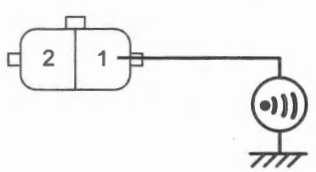

IL06L1450051-01

Is no continuity indicated?

Yes — Repair or replace the defective wire harness. (Faulty "T7" wire at the ABS control unit coupler)

No — Replace the rear wheel speed sensor. ☞(Page 4E-57)

Step 4

1) Check for continuity between "T15" and ground at the ABS control unit coupler.

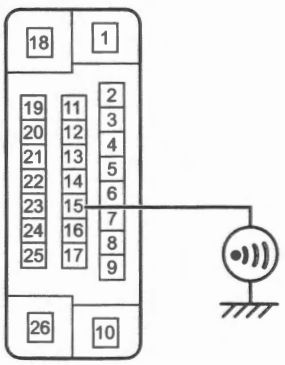

IL06L1450052-01

Is no continuity indicated?

Yes — Go to Step 6.

No — Go to Step 5.

Step 5

1) Disconnect the rear wheel speed sensor coupler.
2) Check for continuity between "T2" and ground at the rear wheel speed sensor coupler.

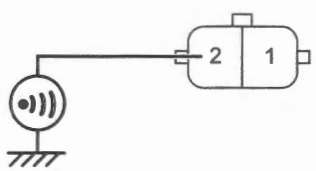

IL06L1450053-01

Is no continuity indicated?

Yes — Repair or replace the defective wire harness. (Faulty "T15" wire at the ABS control unit coupler)

No — Replace the rear wheel speed sensor. ☞(Page 4E-57)

Step 6

1) Disconnect the rear wheel speed sensor coupler.
2) Check for continuity between "T7" on the ABS control unit coupler and "T1" on the rear wheel speed sensor coupler.
3) Check for continuity between "T15" on the ABS control unit coupler and "T2" wire on the rear wheel speed sensor coupler.

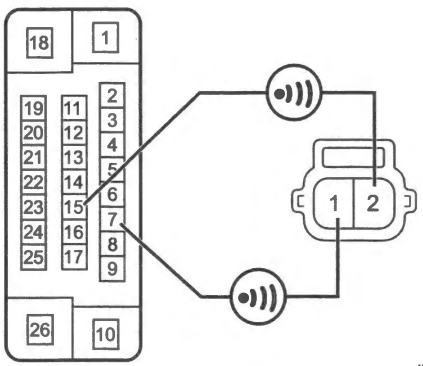

IL06L1450054-01

Is continuity indicated?

Yes — Go to Step 7.

No — Repair or replace the defective wire harness.

Step 7

1) Measure the rear wheel speed sensor current. Refer to "Wheel Speed Sensor Current" under "Wheel Speed Sensor and Sensor Rotor Inspection" (Page 4E-58).

Is rear wheel speed sensor OK?

Yes — Replace the ABS control unit/HU. ☞(Page 4E-54)

No — Replace the rear wheel speed sensor. ☞(Page 4E-57)

Troubleshooting (Without motion truck brake system)

Step 1

1) Turn ignition switch OFF.
2) Check the ABS control unit coupler (1) and rear wheel speed sensor coupler (2) for loose or poor contacts. If OK, then disconnect the ABS control unit coupler.
   - Rear wheel speed sensor coupler: ☞(Page 4E-57)
   - ABS control unit coupler: ☞(Page 4E-54)

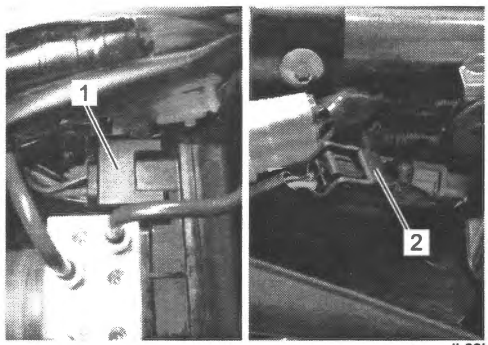

IL06L1450118-01

3) Check for continuity between "T14" and "T15" at the ABS control unit coupler.

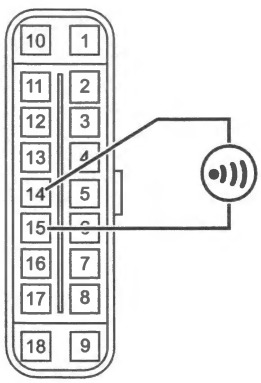

IL06L1450056-01

Is no continuity indicated?

Yes — Go to Step 2.

No
- Repair or replace the defective wire harness. (Faulty sensor wire)
- Faulty rear wheel speed sensor. ☞(Page 4E-57)

Step 2

1) Check for continuity between "T15" and ground at the ABS control unit coupler.

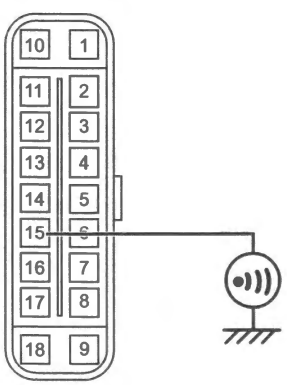

IL06L1450057-01

Is no continuity indicated?

Yes — Go to Step 4.

No — Go to Step 3.

Step 3

1) Disconnect the rear wheel speed sensor coupler.
2) Check for continuity between "T1" and ground at the rear wheel speed sensor coupler.

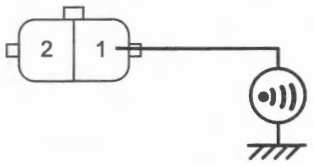

IL06L1450058-01

Is no continuity indicated?

Yes — Repair or replace the defective wire harness. (Faulty "T15" wire at the ABS control unit coupler)

No — Replace the rear wheel speed sensor. ☞(Page 4E-57)

Step 4

1) Check for continuity between "T14" and ground at the ABS control unit coupler.

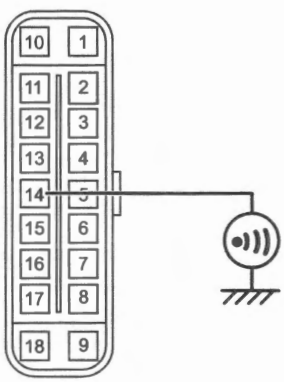

IL06L1450059-01

Is no continuity indicated?

Yes — Go to Step 6.

No — Go to Step 5.

Step 5

1) Disconnect the rear wheel speed sensor coupler.
2) Check for continuity between "T2" and ground at the rear wheel speed sensor coupler.

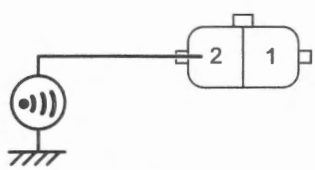

IL06L1450060-01

Is no continuity indicated?

Yes — Repair or replace the defective wire harness. (Faulty "T14" wire at the ABS control unit coupler)

No — Replace the rear wheel speed sensor. ☞(Page 4E-57)

Step 6

1) Disconnect the rear wheel speed sensor coupler.
2) Check for continuity between "T14" on the ABS control unit coupler and "T2" wire on the rear wheel speed sensor coupler.
3) Check for continuity between "T15" on the ABS control unit coupler and "T1" wire on the rear wheel speed sensor coupler.

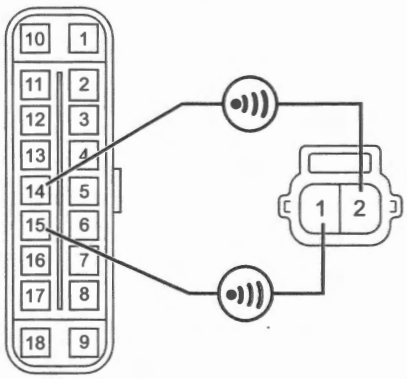

IL06L1450061-01

Is continuity indicated?

Yes — Go to Step 7.

No — Repair the wire harness.

Step 7

1) Measure the rear wheel speed sensor current. Refer to "Wheel Speed Sensor Current" under "Wheel Speed Sensor and Sensor Rotor Inspection" (Page 4E-58).

Is rear wheel speed sensor OK?

Yes — Replace the ABS control unit/HU. ☞(Page 4E-54)

No — Replace the rear wheel speed sensor. ☞(Page 4E-57)

DTC C1647 (47) / C1648 (48)

BENL06L24504018

Possible Cause
C1647: Supply Voltage (Increased) **C1648: Supply Voltage (Decreased)** • Faulty generator or regulator/rectifier • Faulty battery • Faulty ABS control unit • Faulty wire harness, etc.

Wiring Diagram
Refer to "ABS Circuit Diagram" (Page 4E-5).

Troubleshooting (With motion truck brake system)

Step 1

1) Turn the ignition switch OFF.
2) Remove the seat. ☞(Page 9D-27)
3) Measure the voltage between the (+) and (–) battery terminals.

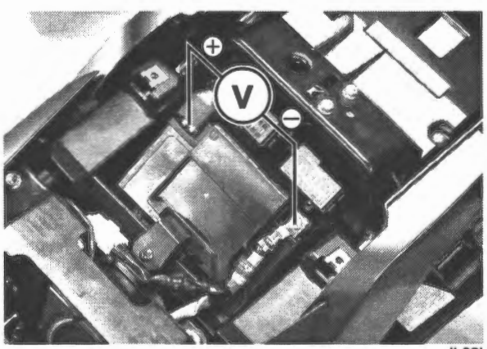

IL06L1450062-02

Is voltage 12 V or more?

Yes — Go to Step 2.

No — Charge or replace the battery. ☞(Page 1J-10)

Step 2

1) Start the engine at 5000 r/min with the dimmer switch set to HI.
2) Measure the voltage between the (+) and (–) battery terminals.

Is voltage 14.0 – 15.5 V?

Yes — Go to Step 3.

No — Inspect the generator and regulator/rectifier.
- Generator: ☞(Page 1J-4)
- Regulator/rectifier: ☞(Page 1J-8)

Step 3

1) Turn the ignition switch OFF.
2) Check the ABS control unit coupler (1) for loose or poor contacts. If OK, then disconnect the ABS control unit coupler. ☞(Page 4E-54)

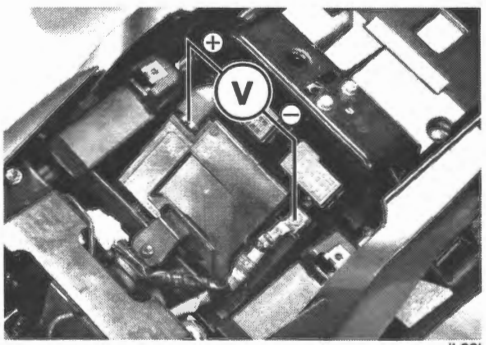

IL06L1450062-02

3) Start the engine at 5000 r/min with the dimmer switch set to HI.
4) Measure the voltage between "T4" and "T10" at the ABS control unit coupler.

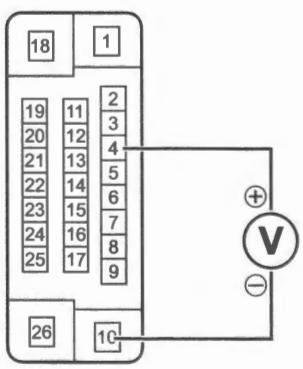

IL06L1450064-01

Is voltage 14.0 – 15.5 V?

Yes — Replace the ABS control unit/HU. ☞(Page 4E-54)

No — Repair or replace the defective wire harness. (Faulty ignition or ground wire)

Troubleshooting (Without motion truck brake system)

Step 1

1) Turn the ignition switch OFF.
2) Remove the seat. ☞(Page 9D-27)
3) Measure the voltage between the (+) and (–) battery terminals.

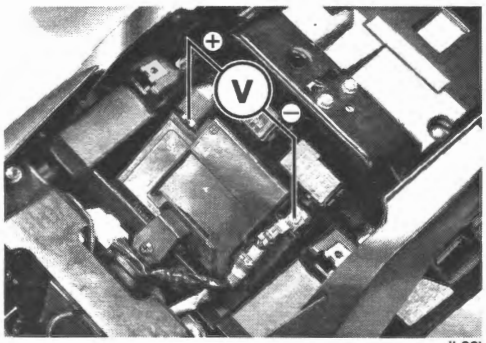

IL06L1450065-01

Is voltage 12 V or more?

Yes — Go to Step 2.

No — Charge or replace the battery. ☞(Page 1J-10)

Step 2

1) Start the engine at 5000 r/min with the dimmer switch set to HI.
2) Measure the voltage between the (+) and (-) battery terminals.

Is voltage 14.0 - 15.5 V?

Yes — Go to Step 3.

No — Inspect the generator and regulator/rectifier.

- Generator: ☞(Page 1J-4)
- Regulator/rectifier: ☞(Page 1J-8)

Step 3

1) Turn the ignition switch OFF.
2) Check the ABS control unit coupler (1) for loose or poor contacts. If OK, then disconnect the ABS control unit coupler. ☞(Page 4E-54)

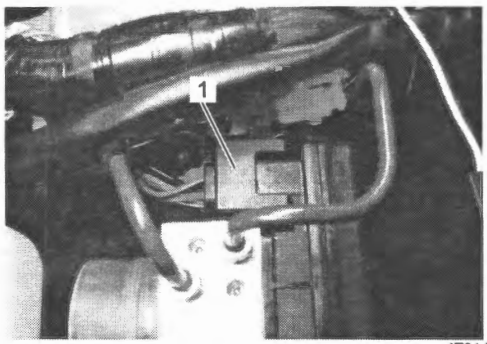

IE31J1450048-01

3) Start the engine at 5000 r/min with the dimmer switch set to HI.
4) Measure the voltage between "T6" and "T9" at the coupler.

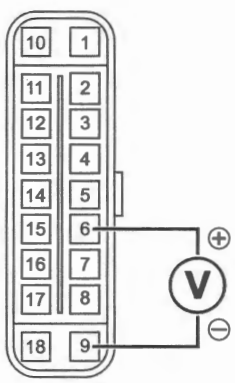

IL06L1450066-01

Is voltage 14.0 – 15.5 V?

Yes — Replace the ABS control unit/HU. ☞(Page 4E-54)

No — Repair or replace the defective wire harness. (Faulty ignition or ground wire)

DTC C1649 (49) / C164A (4A)

BENL06L24504019

Possible Cause
C1649 (49): CAN High Voltage **C164A (4A): CAN Low Voltage** • Faulty generator or regulator/rectifier • Faulty battery • Faulty ABS control unit/HU • Faulty wire harness, etc.

Wiring Diagram
Refer to "ABS Circuit Diagram" (Page 4E-5).

Troubleshooting

Step 1

1) Turn the ignition switch OFF.
2) Remove the seat. ☞(Page 9D-27)
3) Measure the voltage between the (+) and (–) battery terminals.

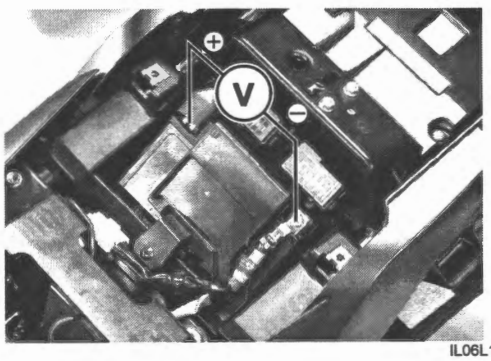

IL06L1450067-01

Is voltage 12.0 V or more?

Yes — Go to Step 2.

No — Charge or replace the battery. ☞(Page 1J-10)

Step 2

1) Start the engine at 5000 r/min with the dimmer switch set to HI.
2) Measure the voltage between the (+) and (-) battery terminals.

Is voltage 14.0 – 15.5 V?

Yes — Go to Step 3.

No — Inspect the generator and regulator/rectifier.
- Generator: ☞(Page 1J-4)
- Regulator/rectifier: ☞(Page 1J-8)

Step 3

1) Turn the ignition switch OFF.
2) Check the IMU coupler for loose or poor contacts. If OK, then disconnect the IMU harness coupler. ☞(Page 4E-56)
3) Start the engine at 5000 r/min with the dimmer switch set to HI.
4) Measure the voltage between the "T1" wire and "T4" wire.

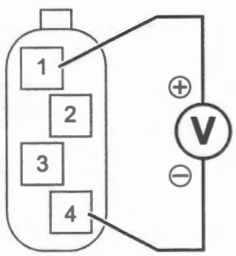

IL06L1450068-01

Is voltage 14.0 – 15.5 V?

Yes — Replace the ABS control unit/HU. ☞(Page 4E-54)

No — Repair or replace the defective wire harness.

DTC C1655 (55)

BENL06L24504020

Possible Cause
ABS Control Unit Malfunction Faulty ABS control unit

Troubleshooting

Step 1

1) Delete DTCs "DTC Clearance" (Page 4E-16) and repeat the code output procedure. "DTC Check" (Page 4E-14)

Is the DTC C1655 output again?

Yes — Replace the ABS control unit/HU. ☞(Page 4E-54)

No — Intermittent trouble.

DTC C1661 (61)

BENL06L24504021

Possible Cause
ABS Solenoid Malfunction Valve relay circuit open or short, broken fuse for valve relay, faulty valve relay, interruption of valve, failure output from ABS control unit, etc.

Troubleshooting (With motion truck brake system)

Step 1

1) Turn the ignition switch OFF.
2) Remove the seat. ☞(Page 9D-27)
3) Open the fuse box and inspect the ABS valve fuse (15 A) (1).

NOTE

If a fuse is blown, find the cause of the problem and correct it before replacing the fuse.

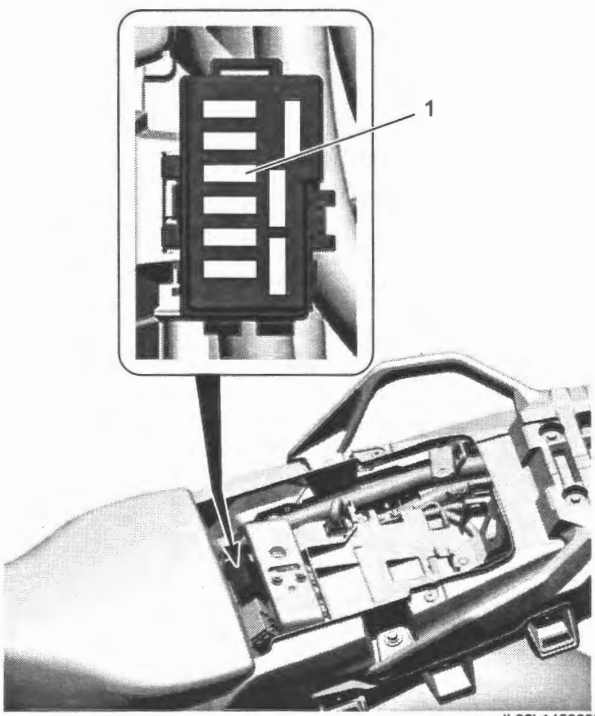

IL06L1450069-01

Is the ABS valve fuse OK?

Yes — Go to Step 2.

No — Replace the ABS valve fuse.

Step 2

1) Check the ABS control unit coupler (1) for loose or poor contacts. If OK, then disconnect the ABS control unit coupler. ☞(Page 4E-54)

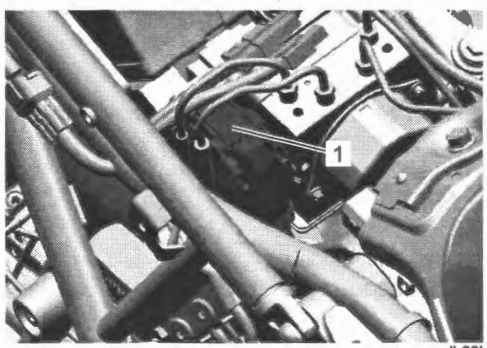

IL06L1450070-01

2) Measure the voltage between "T1" and "T10" at the coupler.

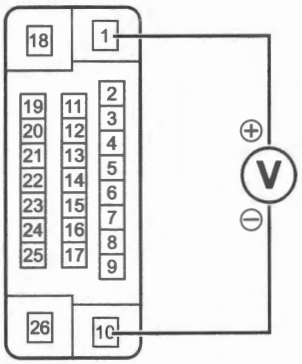

IL06L1450071-01

Is voltage 12.0 V or more?

Yes — Replace the ABS control unit/HU. ☞(Page 4E-54)

No — Repair or replace the defective wire harness. (Faulty solenoid or ground wire)

Troubleshooting (Without motion truck brake system)

Step 1

1) Turn the ignition switch OFF.
2) Remove the seat. ☞(Page 9D-27)
3) Open the fuse box and inspect the ABS valve fuse (15 A) (1).

NOTE

If a fuse is blown, find the cause of the problem and correct it before replacing the fuse.

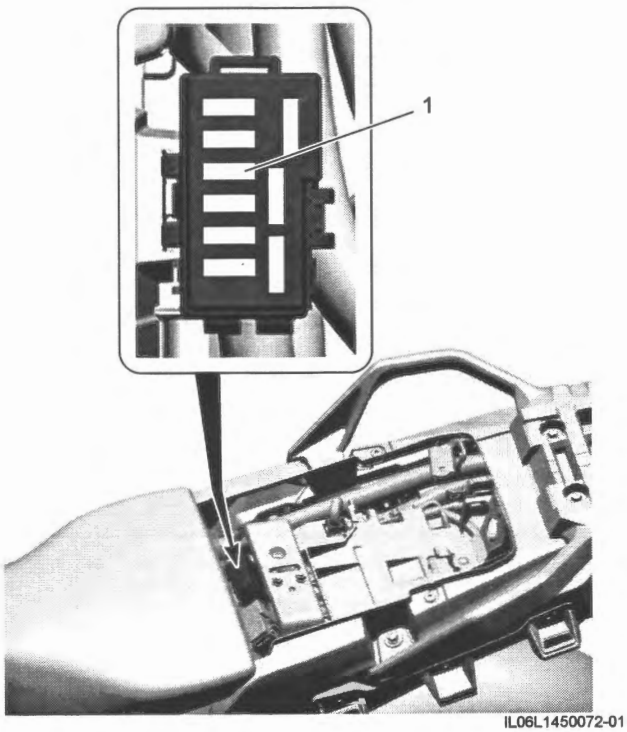

IL06L1450072-01

Is the ABS valve fuse OK?

Yes — Go to Step 2.

No — Replace the ABS valve fuse.

Step 2

1) Check the ABS control unit coupler (1) for loose or poor contacts. If OK, then disconnect the ABS control unit coupler. ☞(Page 4E-54)

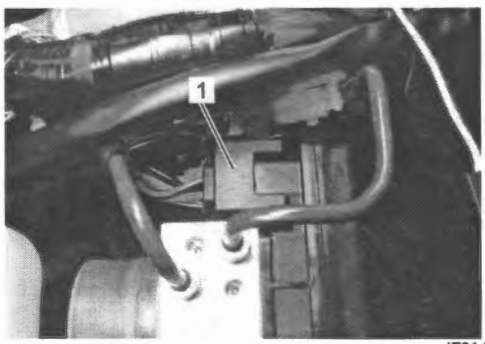

IE31J1450048-01

2) Measure the voltage between "T1" and "T9" at the coupler.

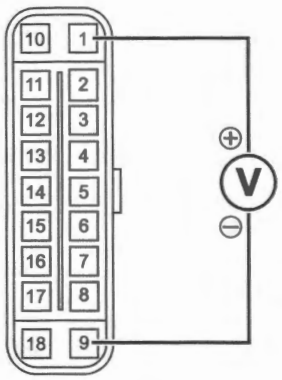

IL06L1450073-01

Is voltage 12.0 V or more?

Yes — Replace the ABS control unit/HU. ☞(Page 4E-54)

No — Repair or replace the defective wire harness. (Faulty solenoid or ground wire)

DTC C1671 (71)

BENL06L24504022

Possible Cause
C1671: Inertial Sensor Malfunction
• Abnormality in installation position of IMU
• Faulty IMU

Troubleshooting

Step 1

1) Turn the ignition switch OFF.
2) Remove the left frame cover (LH). ☞(Page 9D-30)
3) Check the IMU coupler (1) for loose or poor contacts.

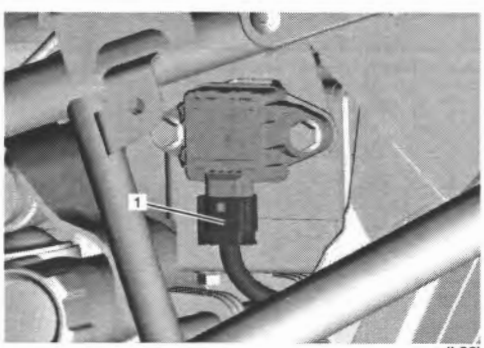

IL06L1450074-02

Is check result OK?

Yes — Go to Step 2.

No — Repair or replace the defective parts.

Step 2

1) Check that IMU (1) is mounted securely. ☞(Page 4E-56)

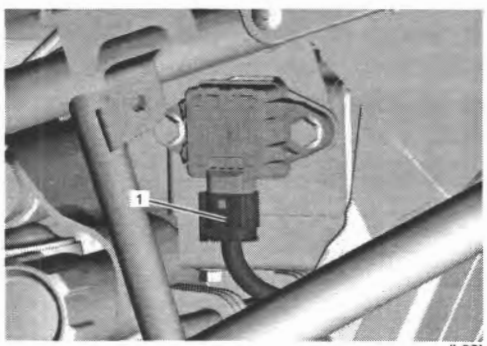

IL06L1450074-02

Is check result OK?

Yes — Go to Step 3.

No — Reinstall the IMU properly.

Step 3

1) Replace the IMU. Refer to ☞(Page 4E-56).
2) Perform "DTC Clearance" (Page 4E-16), and clear DTC.
3) Perform "DTC Check" (Page 4E-14), and check DTC.

Is DTC C1671 (71) still detected?

Yes — Replace the ABS control unit/HU.

No — End.

DTC C1672 (72)

BENL06L24504023

Possible Cause
C1672 (72): CAN Bus Malfunction
• Faulty IMU
• CAN communication circuit open or short
• Faulty ABS control unit

Troubleshooting

Step 1

1) Check DTC related to CAN communication.

Is there any CAN-DTC(s) detected?

Yes — Go to troubleshooting for applicable DTC. ☞(Page 10H-6)

No — Go to Step 2.

Step 2

1) Replace the IMU with a known good one and recheck DTC. ☞(Page 4E-56)

Is DTC C1672 (72) still detected?

Yes — Replace the ABS control unit/HU.

No — End.

DTC C1681 (81)

BENL06L24504024

Possible Cause
C1681 (81): ABS Pressure Sensor Malfunction
Faulty ABS control unit/HU

Troubleshooting

Step 1

ABS Control Unit coupler connection check

1) Turn the ignition switch OFF.
2) Disconnect the ABS control unit/HU coupler. ☞(Page 4E-54)
3) Check for proper terminal connection to the ECM couplers.
4) If connections are OK, reconnect the ECM couplers.
5) Perform "DTC Check" (Page 4E-14) and check DTC.

Is DTC C1681 (81) still detected?

Yes — Replace the ABS control unit/HU with a known good one, and inspect it again. ☞(Page 4E-54)

No — End.

DTC C1682 (82)

BENL06L24504025

Possible Cause
C1682 (82): CAN Communication Malfunction (IPC)
• Faulty ABS control unit/HU
• Faulty Instrument Panel Cluster (IPC)

Troubleshooting

Step 1

DTC check

1) Perform "DTC Check" (Page 4E-14).

Is other DTC(s) than C1682 detected?

Yes — Go to troubleshooting for applicable DTC.

No — Go to Step 2.

Step 2

DTC check

1) Replace the combination meter with a known good one. "Combination Meter Removal and Installation" in Section 9C (Page 9C-16).
2) Perform "DTC Clearance" (Page 4E-16), and clear DTC.
3) Perform "DTC Check" (Page 4E-14), and check DTC.

Is DTC C1682 (82) still detected?

Yes — Replace the ABS control unit/HU with a known good one, and recheck DTC. ☞(Page 4E-54)

No — End.

DTC C1683 (83)

BENL06L24504026

Possible Cause
CAN Communication Malfunction (ECM)
Faulty ABS control unit/HU, Faulty ECM

Troubleshooting

Step 1

ECM DTC check

1) Check that DTC is detected in ECM.

Is the DTC detected?

Yes — Go to troubleshooting for DTCs. Refer to "DTC Table" in Section 1A (Page 1A-13).

No — Go to Step 2.

Step 2

ABS DTC check

1) Check that DTC is detected in ABS.

Is the DTC C1683 (83) output again?

Yes — Replace the ABS control unit/HU with a known good one, and recheck DTC. ☞(Page 4E-54)

No — End.

DTC U0073 (11)

BENL06L24504027

Refer to "Troubleshooting for Communication Bus Off" in Section 10H (Page 10H-15).

DTC U0100 (12)

BENL06L24504028

Refer to "Troubleshooting for Lost Communication" in Section 10H (Page 10H-10).

DTC U0123 (13)

BENL06L24504029

Refer to "Troubleshooting for Lost Communication" in Section 10H (Page 10H-10).

DTC U0155 (14)

BENL06L24504030

Refer to "Troubleshooting for Lost Communication" in Section 10H (Page 10H-10).

ABS Circuits Inspection (With motion track brake system)

BENL06L24504031

Refer to "Precautions for Electrical Circuit Service" in Section 00 (Page 00-2).
Refer to "Precautions for Circuit Tester" in Section 00 (Page 00-8).

Voltage and Signal Check

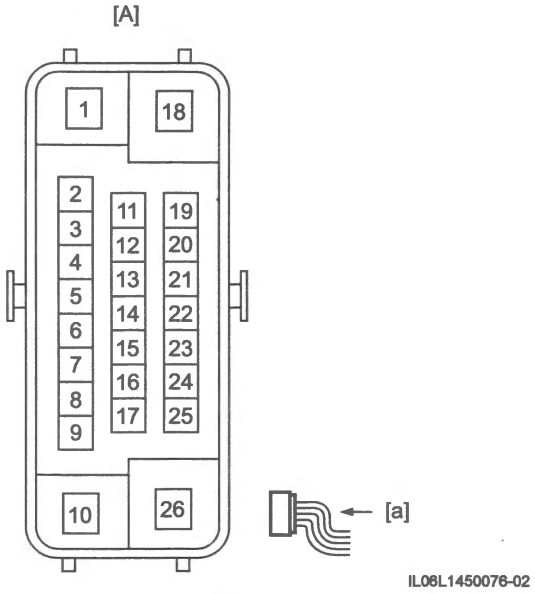

[A]: ABS control unit/HU connector "T" (View [a])

ABS control unit / HU terminal standard voltage table (reference)

NOTICE

Failure to observe "Precautions for Electrical Circuit Service" and "Precautions for Circuit Tester" may cause damage to motorcycle or parts when measuring voltage.
Read "Precautions for Electrical Circuit Service" in Section 00 (Page 00-2) and "Precautions for Circuit Tester" in Section 00 (Page 00-8) before starting the operations described below and follow all of the instructions provided.

NOTE

- **As each terminal voltage is affected by battery voltage, check that battery voltage is 12 V or more when ignition is "ON".**
- **Voltage with asterisk (*) cannot be measured with voltmeter because it is pulse signal. Use oscilloscope for its check.**

Terminal No.	Wire color	Circuit	Normal voltage	Condition
T1	R/B	Solenoid valve power supply circuit	10 to 14 V	Any condition
T2	Bl	CAN signal (High)	Approx. 3.5 V ↑↓ Approx. 2.5 V	Ignition switch: ON
T3	Bl/B	Front wheel speed sensor output	0 to 5 V	Ignition switch: ON
T4	Y	ABS controller power supply circuit	10 to 14 V	Ignition switch: ON
T7	W/Y	Rear wheel speed sensor power supply circuit	5 to 14 V	Ignition switch: ON
T8	B/R	Front wheel speed sensor signal	Approx. 0 V	Any condition
T10	B	Ground	Approx. 0 V	Any condition

Terminal No.	Wire color	Circuit	Normal voltage	Condition
T11	G	CAN signal (Low)	Approx. 2.5 V ↑↓ Approx. 1.5 V	Ignition switch: ON
T12	Br	ABS indicator light	10 to 14 V	Ignition switch: ON ABS indicator light: "ON"
			Approx. 0 V	Ignition switch: ON ABS indicator light: "OFF" ☞(Page 4E-25)
T15	B/Y	Rear wheel speed sensor signal	Approx. 0 V	Any condition
T16	W/R	Front wheel speed sensor power supply circuit	5 to 14 V	Ignition switch: ON
T18	R	Pump motor power supply circuit	10 to 14 V	Any condition
T19	Bl/W	Rear wheel speed sensor output	0 to 5 V	Ignition switch: ON
T20	W	Diagnosis L-line	10 to 14 V	Ignition switch: ON Mode select switch: "OFF"
T23	Gr/R	Diagnosis K-line	8 to 14 V	Ignition switch: ON
T26	B	Pump motor ground	Approx. 0 V	Any condition

ABS Circuits Inspection (Without motion track brake system)

BENL06L24504032

Voltage and Signal Check

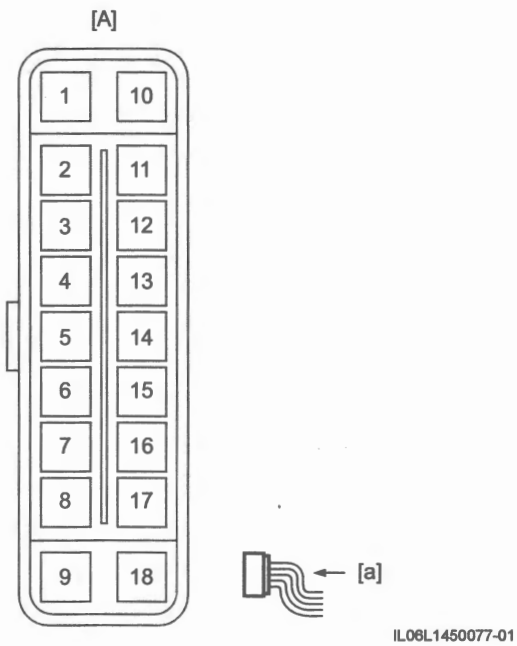

IL06L1450077-01

ABS control unit / HU terminal standard voltage table (reference)

NOTICE

Failure to observe "Precautions for Electrical Circuit Service" and "Precautions for Circuit Tester" may cause damage to motorcycle or parts when measuring voltage.
Read "Precautions for Electrical Circuit Service" in Section 00 (Page 00-2) and "Precautions for Circuit Tester" in Section 00 (Page 00-8) before starting the operations described below and follow all of the instructions provided.

NOTE

- **As each terminal voltage is affected by battery voltage, check that battery voltage is 12 V or more when ignition is "ON".**
- **Voltage with asterisk (*) cannot be measured with voltmeter because it is pulse signal. Use oscilloscope for its check.**

Terminal No.	Wire color	Circuit	Normal voltage	Condition
T1	R/B	Solenoid valve power supply circuit	10 to 14 V	Any condition
T2	Bl/B	Front wheel speed sensor output	0 to 5 V	Ignition switch: ON
T3	W	Diagnosis L-line	10 to 14 V	Ignition switch: ON Mode select switch: "OFF"
T5	Gr/R	Diagnosis K-line	8 to 14 V	Ignition switch: ON
T6	Y	ABS controller power supply circuit	10 to 14 V	Ignition switch: ON
T7	B/R	Front wheel speed sensor signal	Approx. 0 V	Any condition
T9	Gr	Ground	Approx. 0 V	Any condition
T10	R	Pump motor power supply circuit	10 to 14 V	Any condition
T11	Br	ABS indicator light	10 to 14 V	Ignition switch: ON ABS indicator light: "ON"
			Approx. 0 V	Ignition switch: ON ABS indicator light: "OFF" ☞(Page 4E-25)
T12	Bl/W	Rear wheel speed sensor output	0 to 5 V	Ignition switch: ON
T14	B/Y	Rear wheel speed sensor signal	Approx. 0 V	Any condition
T15	W/Y	Rear wheel speed sensor power supply circuit	5 to 14 V	Ignition switch: ON
T16	W/R	Front wheel speed sensor power supply circuit	5 to 14 V	Ignition switch: ON
T18	B/Bl	Pump motor ground	Approx. 0 V	Any condition

ABS Control unit / HU Power Supply and Ground Circuit Check

BENL06L24504033

Circuit Diagram

Refer to "ABS Circuit Diagram" (Page 4E-5).

Troubleshooting (With motion truck brake system)

Step 1

Fuse check

1) Remove the front seat. ☞(Page 9D-27)
2) Open the fuse box and inspect the fuses. Refer to "ABS Components Location" (Page 4E-11).

"ABS motor fuse", "ABS solenoid valve fuse", "Main fuse" and "Ignition fuse" in good condition?

Yes — Go to Step 2.

No — Replace fuse and check for short circuit to ground.

Step 2

ABS controller power supply circuit check

1) Check that ignition is "OFF".
2) Disconnect ABS control unit coupler. ☞(Page 4E-54)
3) Check for proper terminal connection to ABS control unit coupler.
4) If connections are OK, set ignition "ON".
5) Check that voltage between ABS controller power supply circuit "T4" and ground is battery voltage.

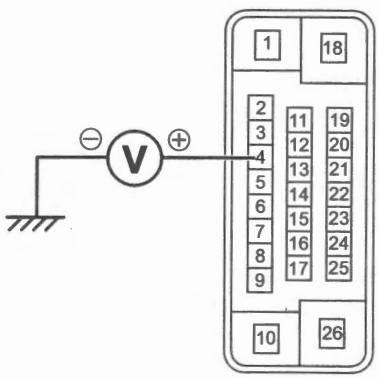

IL06L1450078-02

Is check result OK?

Yes — Go to Step 3.

No — Repair or replace ABS controller power supply circuit.

Step 3

Pump motor and solenoid valve power supply circuit check.

1) Set ignition "OFF".
2) Check the following points.
   - Voltage between Pump motor power supply circuit "T18" circuit and ground is battery voltage.
   - Voltage between Solenoid valve power supply circuit "T1" circuit and ground is battery voltage.

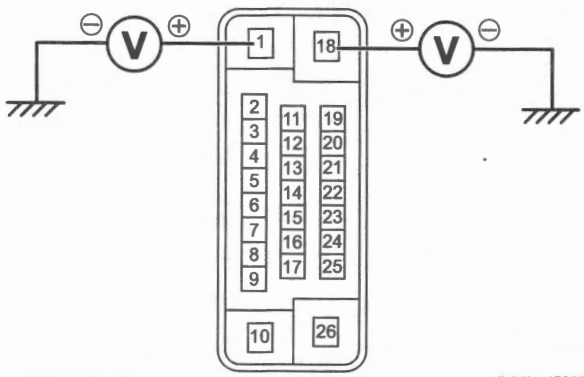

IL06L1450079-02

Is check result OK?

Yes — Go to Step 4.

No — Repair or replace Pump motor power supply circuit or Solenoid valve power supply circuit.

Step 4

ABS control unit / HU ground circuit check

1) Check that ignition is "OFF".
2) Check that resistance between ABS controller ground circuit "T10" and body ground is less than 1 Ω.

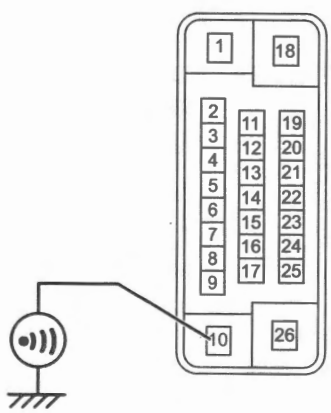

IL06L1450080-01

Is check result OK?

Yes — ABS control unit/HU power supply and ground circuit are in good condition.

No — Repair or replace ABS controller ground circuit.

Troubleshooting (Without motion truck brake system)

Step 1

Fuse check

1) Remove the front seat. ☞(Page 9D-27)
2) Open the fuse box and inspect the fuses. Refer to "ABS Components Location" (Page 4E-11).

"ABS motor fuse", "ABS solenoid valve fuse", "Main fuse" and "Ignition fuse" in good condition?

Yes — Go to Step 2.

No — Replace fuse and check for short circuit to ground.

Step 2

ABS controller power supply circuit check

1) Check that ignition is "OFF".
2) Disconnect ABS control unit coupler. ☞(Page 4E-54)
3) Check for proper terminal connection to ABS control unit coupler.
4) If connections are OK, set ignition "ON".
5) Check that voltage between ABS controller power supply circuit "T6" and ground is battery voltage.

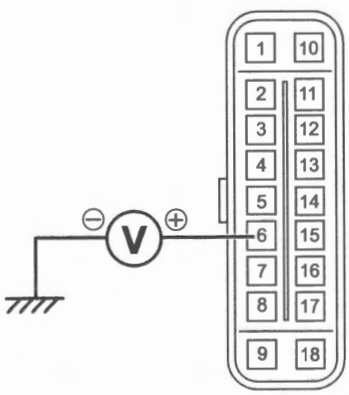

IL06L1450081-02

Is check result OK?

Yes — Go to Step 3.

No — Repair or replace ABS controller power supply circuit.

Step 3

Pump motor and solenoid valve power supply circuit check.

1) Set ignition "OFF".
2) Check the following points.
   - Voltage between Pump motor power supply circuit "T10" circuit and ground is battery voltage.
   - Voltage between Solenoid valve power supply circuit "T1" circuit and ground is battery voltage.

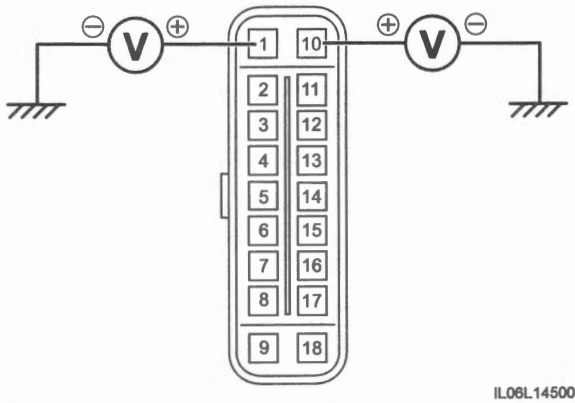

IL06L1450082-01

Is check result OK?

Yes — Go to Step 4.

No — Repair or replace Pump motor power supply circuit or Solenoid valve power supply circuit.

Step 4

ABS control unit / HU ground circuit check

1) Check that ignition is "OFF".
2) Check that resistance between ABS controller ground circuit "T9" and body ground is less than 1 Ω.

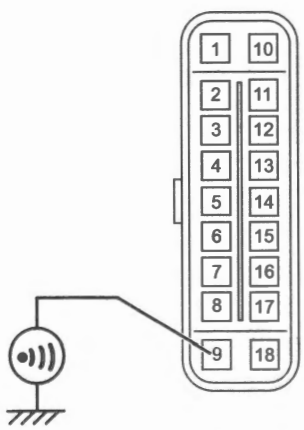

IL06L1450083-01

Is check result OK?

Yes — ABS control unit/HU power supply and ground circuit are in good condition.

No — Repair or replace ABS controller ground circuit.

Repair Instructions

ABS Control Unit Coupler Disconnect and Connect

BENL06L24506001

Disconnect

1) Turn the ignition switch OFF.
2) Remove the seat. ☞(Page 9D-27)
3) Remove the seat bridge. ☞(Page 4E-54)
4) Push the tab (1) and pull up the lock lever (2) and disconnect the ABS control unit coupler (3).

DL1050 RC

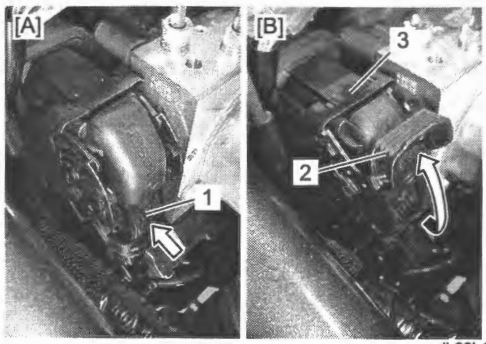

IL06L1450119-01

[A]:	Locked position
[B]:	Unlocked position

DL1050 RQ

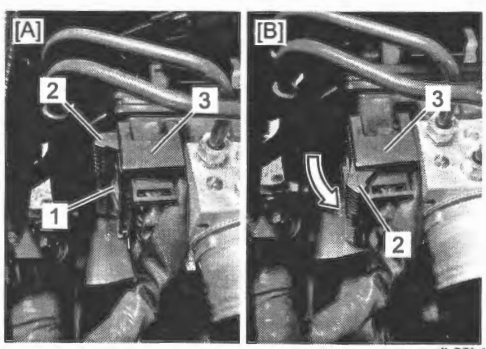

IL06L1450120-01

[A]:	Locked position
[B]:	Unlocked position

Connect

1) Connect the ABS control unit coupler.
2) Install the seat heat bridge. ☞(Page 4E-54)
3) Install the seat. ☞(Page 9D-27)

ABS Control Unit / HU Removal and Installation

BENL06L24506002

Removal

1) Turn the ignition switch OFF.
2) Drain the brake fluid. ☞(Page 0B-23)
3) Remove the battery holder. ☞(Page 9D-39)
4) Remove the seat bridge (1) by removing the bolts (2).

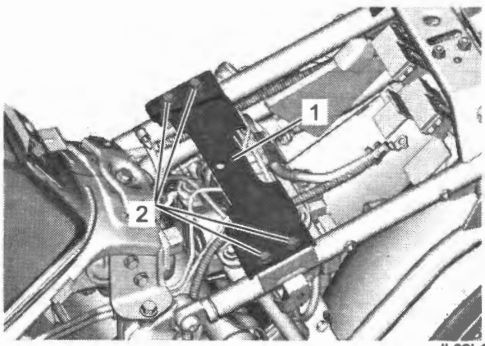

IL06L1450084-01

5) Disconnect the ABS control unit coupler (1). ☞(Page 4E-54)

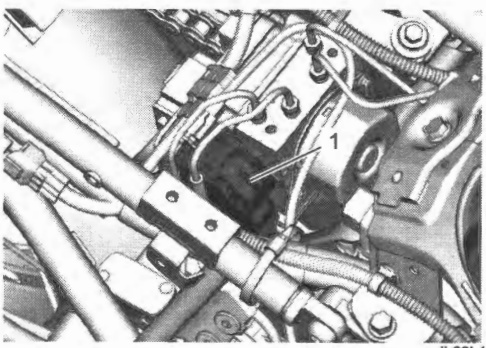

IL06L1450085-01

6) Dismount the TO sensor (1), turn signal relay (2) and IMU (3) (If equipped).

With motion track brake system

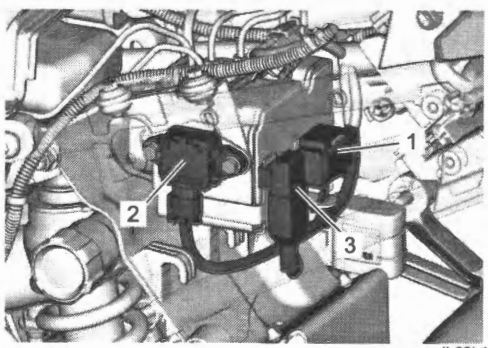

IL06L1450086-01

Without motion track brake system

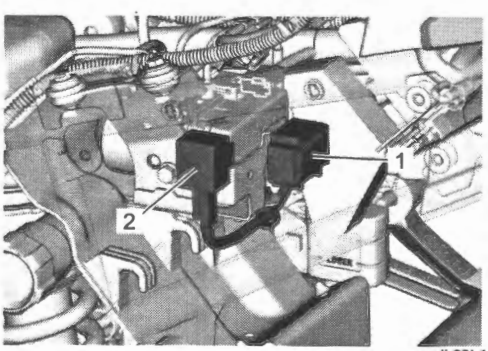

IL06L1450087-01

7) Loosen the flare nuts (1) and disconnect the brake pipes.

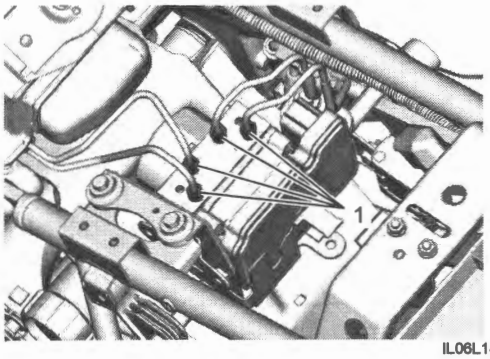

IL06L1450088-01

8) Remove the ABS control unit/HU assembly (1) by removing the holder mounting bolts (2).

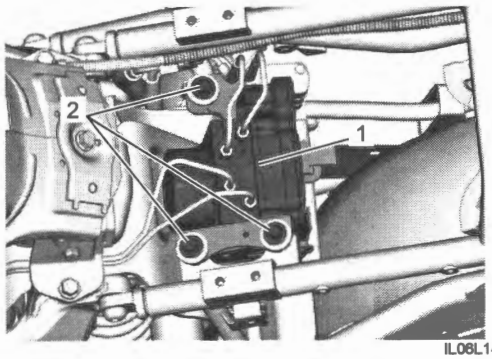

IL06L1450090-01

9) Remove the ABS control unit/HU (1) from the holder (2) by removing the bolts (3).

With motion track brake system

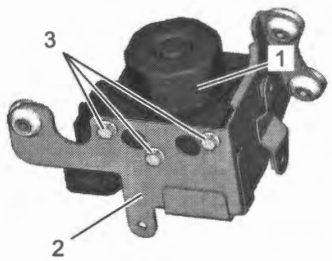

IL06L1450092-01

Without motion track brake system

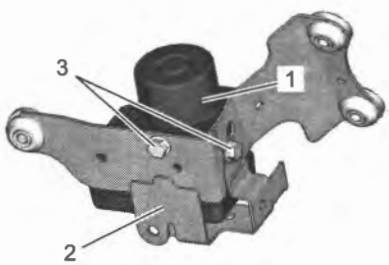

IL06L1450093-01

10) Remove the collars (1) and bushings (2) from the bracket (3).

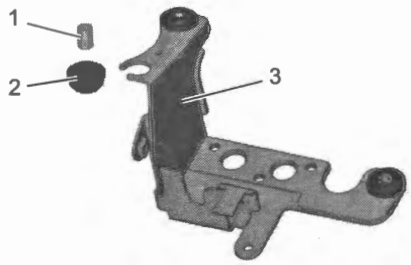

IL06L1450095-01

Installation

Installation is in the reverse order of removal. Pay attention to the following points:

- Route the brake hoses correctly.
  - Front brake hose: ☞(Page 4A-2)
  - Rear brake hose: ☞(Page 4A-7)
- Make sure to hold the brake pipe when tightening the flare nut, or it may be misaligned.
- Tighten the brake pipe flare nuts (1) to the specified torque.

Tightening torque
Brake pipe flare nut (a): 16 N·m (1.6 kgf-m, 11.5 lbf-ft)

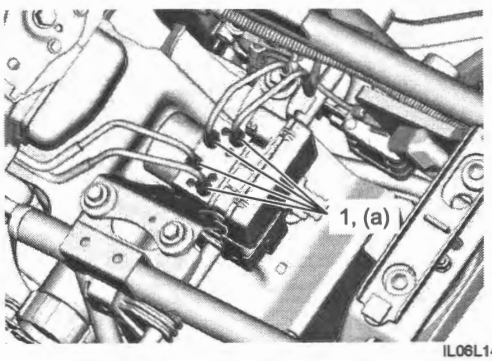

IL06L1450096-01

- Tighten the seat bridge bolts (1) to the specified torque.

Tightening torque
Seat bridge bolt (a): 10 N·m (1.0 kgf-m, 7.5 lbf-ft)

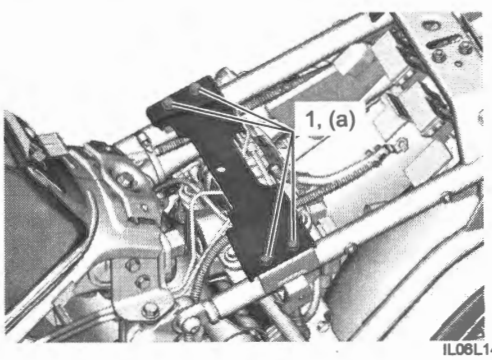

IL06L1450097-01

- Bleed air from the brake fluid circuit. ☞(Page 4A-12)

IMU Removal and Installation (If equipped)

BENL06L24506003

Removal

1) Turn the ignition switch "OFF".
2) Remove the frame cover (LH). ☞(Page 9D-30)
3) Disconnect the IMU coupler (1) and remove the IMU (2) by removing the bolts (3).

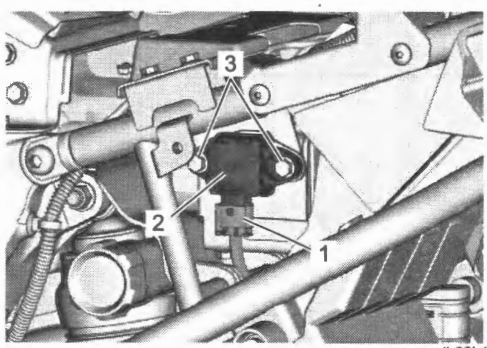

IL06L1450098-01

Installation

Installation is in the reverse order of removal. Pay attention to the following points.

- Tighten the IMU bolts (1) to the specified torque.

Tightening torque
IMU bolt (a): 7 N·m (0.7 kgf-m, 5.5 lbf-ft)

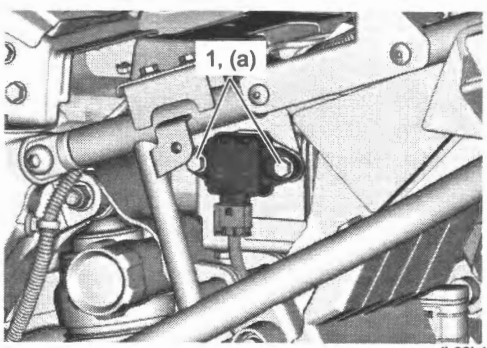

IL06L1450099-01

Front Wheel Speed Sensor Removal and Installation

BENL06L24506004

Removal

1) Turn the ignition switch OFF.
2) Remove the air cleaner box. ☞(Page 1D-6)
3) Disconnect the front wheel speed sensor lead wire coupler (1).



IL06L1450100-01

4) Remove the front wheel speed sensor mounting bolt (1).

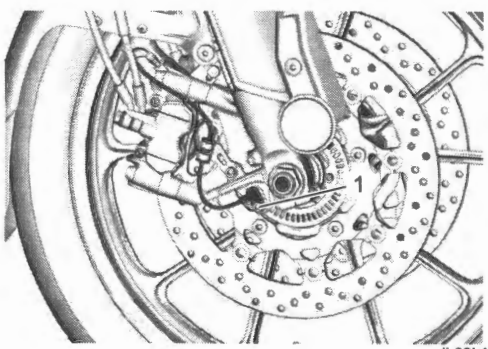

IL06L1450101-01

5) Remove the front wheel speed sensor as shown in the front wheel speed sensor routing diagram. ☞(Page 4E-7)

Installation

Install the front wheel speed sensor in the reverse order of removal. Pay attention to the following points:

- Install the front wheel speed sensor as shown in the front wheel speed sensor routing diagram. Refer to "Front Wheel Speed Sensor Routing Diagram" (Page 4E-7).
- Check the clearance between the front wheel speed sensor and sensor rotor. Refer to "Wheel Speed Sensor and Sensor Rotor Inspection" (Page 4E-58).

Rear Wheel Speed Sensor Removal and Installation

BENL06L24506005

Removal

1) Turn the ignition switch OFF.
2) Remove the frame cover (RH). ☞(Page 9D-30)
3) Disconnect the rear wheel speed sensor lead wire coupler (1).

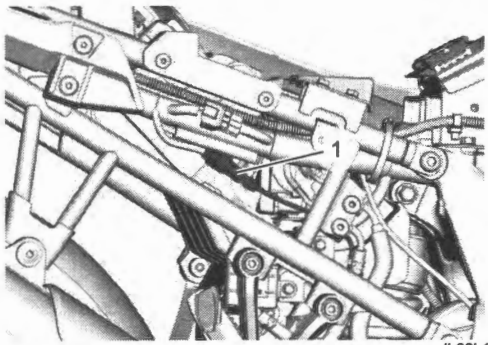

IL06L1450102-01

4) Remove the rear wheel speed sensor mounting bolt (1).

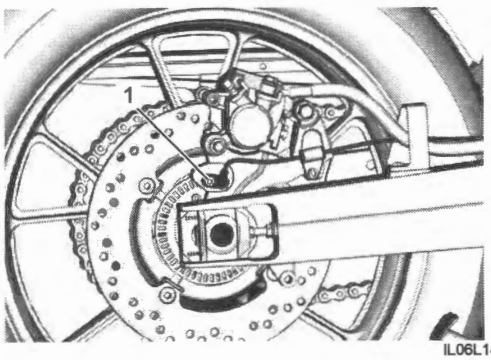

IL06L1450103-01

5) Remove the rear wheel speed sensor as shown in the rear wheel speed sensor routing diagram. Refer to "Rear Wheel Speed Sensor Routing Diagram" (Page 4E-9).

Installation

Install the rear wheel speed sensor in the reverse order of removal. Pay attention to the following points:

- Install the rear wheel speed sensor as shown in the rear wheel speed sensor routing diagram. Refer to "Rear Wheel Speed Sensor Routing Diagram" (Page 4E-9).
- Check the clearance between the rear wheel speed sensor and sensor rotor. ☞(Page 4E-58)

Front Wheel Speed Sensor Rotor Removal and Installation

BENL06L24506006

Refer to "Front Wheel Assembly Removal and Installation" in Section 2D (Page 2D-5).

NOTICE

- **Do not hit the front wheel speed sensor rotor when dismounting the front wheel.**
- **Keep any type of magnets (including magnetic pick-up tools, magnetic screwdrivers, etc.) away from the wheel speed sensor or sensor rotor.**

Removal

Remove the front wheel speed sensor rotor (1) by removing the bolts (2).

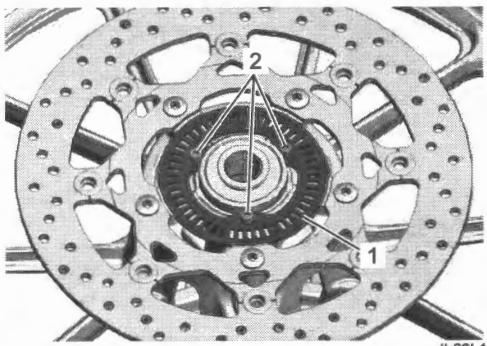

IL06L1450104-01

Installation

1) Install the front wheel speed sensor rotor (1) as the letters "50T" face outside.
2) Tighten the front wheel speed sensor rotor bolts (2) to the specified torque.

Tightening torque
Wheel speed sensor rotor bolt (a): 6.5 N·m (0.66 kgf-m, 4.80 lbf-ft)

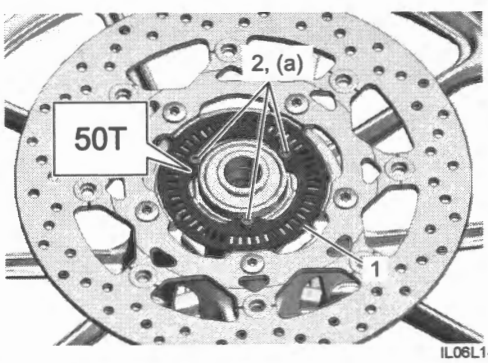

IL06L1450105-01

3) Check the clearance between the front wheel speed sensor and sensor rotor. Refer to "Wheel Speed Sensor and Sensor Rotor Inspection" (Page 4E-58).

Rear Wheel Speed Sensor Rotor Removal and Installation

BENL06L24506007

Refer to "Rear Wheel Assembly Removal and Installation" in Section 2D (Page 2D-12).

NOTICE

- **Do not hit the front wheel speed sensor rotor when dismounting the front wheel.**
- **Keep any type of magnets (including magnetic pick-up tools, magnetic screwdrivers, etc.) away from the wheel speed sensor or sensor rotor.**

Removal

Remove the front wheel speed sensor rotor (1) by removing the bolts (2).

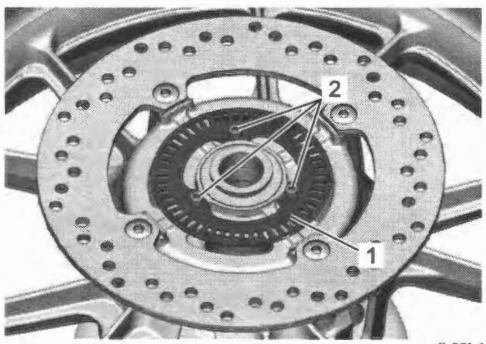

IL06L1450106-01

Installation

1) Install the rear wheel speed sensor rotor (1) as the letters "50T" face outside.
2) Tighten the rear wheel speed sensor rotor bolts (2) to the specified torque.

Tightening torque
Wheel speed sensor rotor bolt (a): 6.5 N·m (0.66 kgf-m, 4.80 lbf-ft)

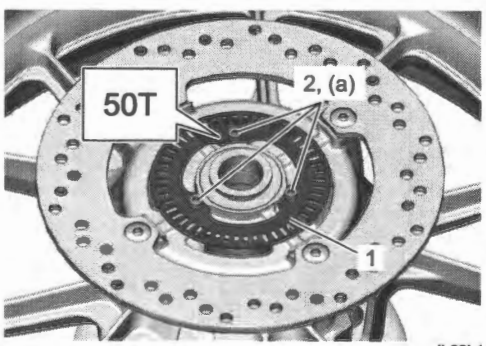

IL06L1450107-01

3) Check the clearance between the rear wheel speed sensor and sensor rotor. Refer to "Wheel Speed Sensor and Sensor Rotor Inspection" (Page 4E-58).

Wheel Speed Sensor and Sensor Rotor Inspection

BENL06L24506008

Wheel Speed Sensor – Sensor Rotor Clearance

Check the clearance between the wheel speed sensor (1) and sensor rotor (2) using the thickness gauge.

Special tool
(A): 09900–20803
(B): 09900–20806

Wheel speed sensor – Sensor rotor clearance
Front [Standard]: 0.58 – 1.55 mm (0.023 – 0.061 in)
Rear [Standard]: 0.58 – 1.55 mm (0.023 – 0.061 in)

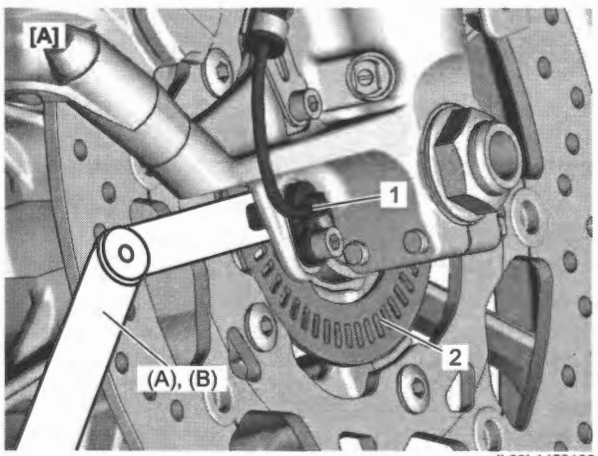

IL06L1450108-01

[A]: Front

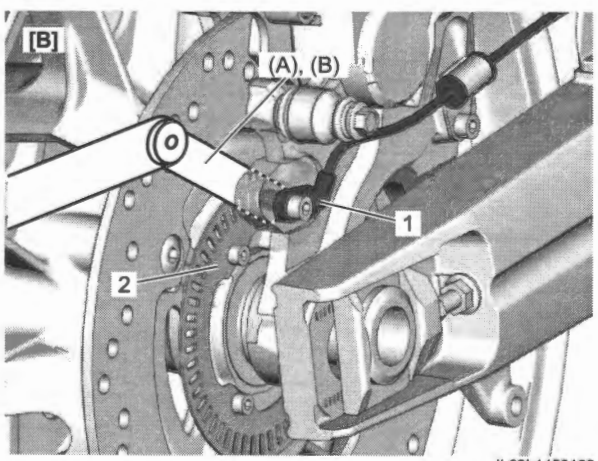

IL06L1450109-01

[A]: Rear

Wheel Speed Sensor

1) Remove the wheel speed sensor.
   - Front: ☞(Page 4E-7)
   - Rear: ☞(Page 4E-9)
2) Inspect the wheel speed sensor for damage. Clean the sensor if any metal particle or foreign material stuck on it.



IL41K1450042-01

3) After finishing the front wheel speed sensor inspection, install the wheel speed sensor. ☞(Page 4E-56)

Wheel Speed Sensor Current

1) Disconnect the front wheel speed sensor coupler. ☞(Page 4E-56)
2) Connect three 1.5 V dry cells (1) in series as shown and make sure that their total voltage is more than 4.5 V. Measure the current between (+) dry cells terminal and "T1" on the wheel speed sensor coupler.

Normal value
5.9 – 16.8 mA

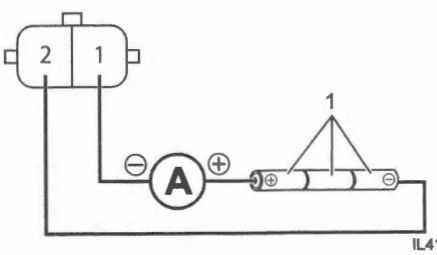

IL41K1450043-02

3) Install the removed parts.

Wheel Speed Sensor Rotor

1) Raise the front wheel off the ground and support the motorcycle with a jack.
2) Check that no wheel speed sensor rotor teeth are broken and that no foreign objects are caught in the wheel speed sensor. If any defects are found, replace the wheel speed sensor rotor with a new one. ☞(Page 4E-57)

Specifications

Tightening Torque Specifications

BENL06L24507001

Fastening part	Tightening torque			Note
	N·m	kgf-m	lbf-ft	
Brake pipe flare nut	16	1.6	11.5	☞(Page 4E-55)
Seat bridge bolt	10	1.0	7.5	☞(Page 4E-55)
IMU bolt	7	0.7	5.5	☞(Page 4E-56)
Wheel speed sensor rotor bolt	6.5	0.66	4.80	☞(Page 4E-57) / ☞(Page 4E-58)

Reference:
For the tightening torques of fasteners not specified in this page, refer to:
"Fasteners Information" in Section 0C (Page 0C-10)

Special Tools and Equipment

Special Tool

BENL06L24508001

09900–20803 Thickness gauge ☞(Page 4E-58) 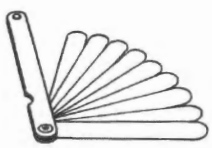	09900–20806 Thickness gauge ☞(Page 4E-58) 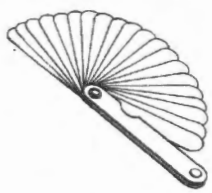
09904–41031 SDS-II set ☞(Page 4E-14) / ☞(Page 4E-16) 	09904–41041 SDS-II (oscilloscope) set ☞(Page 4E-14) / ☞(Page 4E-16) 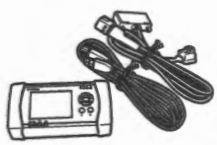
09904–41070 Conversion cable (ISO) ☞(Page 4E-14) / ☞(Page 4E-16) 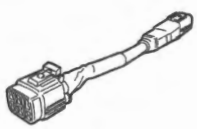	09930–82760 Mode selection switch ☞(Page 4E-16) / ☞(Page 4E-17) / ☞(Page 4E-17) / ☞(Page 4E-27) / ☞(Page 4E-28) 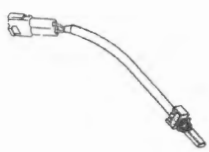

Section 5

Transmission / Transaxle

CONTENTS

Precautions 5-1
Precautions 5-1
Precautions for Transmission / Transaxle 5-1

Manual Transmission 5B-1
Diagnostic Information and Procedures 5B-1
Manual Transmission Symptom Diagnosis 5B-1
Repair Instructions 5B-2
Transmission Components 5B-2
Transmission Removal and Installation 5B-3
Transmission Construction 5B-4
Countershaft Assembly / Driveshaft Assembly Disassembly and Reassembly 5B-5
Gearshift Fork / Gearshift Cam Inspection 5B-8
Left Crankcase Bearing / Oil Seal Removal and Installation 5B-8
Right Crankcase Bearing Removal and Installation 5B-10
Transmission Bearing / Oil Seal Inspection 5B-11
GP Switch Inspection 5B-11
GP Switch Removal and Installation 5B-12
Gearshift Lever Removal and Installation 5B-12
Gearshift Lever Height Inspection and Adjustment 5B-13
Gearshift Lever Construction 5B-13
Gearshift Shaft / Gearshift Cam Plate Components 5B-13
Gearshift Shaft / Gearshift Cam Plate Removal and Installation 5B-14
Gearshift Linkage Inspection 5B-17
Gearshift Shaft Oil Seal Removal and Installation 5B-17
Specifications 5B-18
Tightening Torque Specifications 5B-18
Special Tools and Equipment 5B-19
Recommended Service Material 5B-19
Special Tool 5B-19

Clutch 5C-1
Precautions 5C-1
Precautions for Clutch System 5C-1
Clutch Fluid (Brake Fluid) Information 5C-1
Schematic and Routing Diagram 5C-2
Clutch Hose Routing Diagram 5C-2
Diagnostic Information and Procedures 5C-4
Clutch System Symptom Diagnosis 5C-4
Repair Instructions 5C-5
Clutch Lever Position Switch Inspection 5C-5
Clutch Fluid Level Inspection 5C-5
Clutch Hose Inspection 5C-5
Air Bleeding from Clutch Line 5C-5
Clutch Fluid Replacement 5C-6
Clutch Hose Removal and Installation 5C-6
Clutch Control System Components 5C-7
Clutch Master Cylinder Assembly Removal and Installation 5C-8
Clutch Master Cylinder / Clutch Lever Disassembly and Reassembly 5C-9
Clutch Master Cylinder Parts Inspection 5C-11
Clutch Release Cylinder / Clutch Push Rod (Left) Removal and Installation 5C-11
Clutch Push Rod (Left) Inspection 5C-12
Clutch Release Cylinder Disassembly and Reassembly 5C-13
Clutch Release Cylinder Inspection 5C-13
Clutch Components 5C-14
Clutch Removal 5C-15
Clutch Installation 5C-17
Clutch Parts Inspection 5C-21
Primary Drive Gear Removal and Installation 5C-23
Primary Drive Gear Inspection 5C-24
Primary Drive Gear Disassembly and Reassembly 5C-25
Specifications 5C-26
Tightening Torque Specifications 5C-26
Special Tools and Equipment 5C-27
Recommended Service Material 5C-27
Special Tool 5C-27

Precautions

Precautions

Precautions for Transmission / Transaxle

BENL06L25000001

Refer to "General Precautions" in Section 00 (Page 00-1).

Manual Transmission

Diagnostic Information and Procedures

Manual Transmission Symptom Diagnosis

BENL06L25204001

Condition	Possible cause	Correction / Reference Item
Noisy engine (Noise seems to come from the transmission)	Worn or rubbing gear.	*Replace. ☞(Page 5B-5)*
	Worn countershaft spline.	*Replace countershaft. ☞(Page 5B-5)*
	Worn driveshaft spline.	*Replace driveshaft. ☞(Page 5B-5)*
	Worn bearing.	*Replace. ☞(Page 5B-8) ☞(Page 5B-10)*
Transmission will not shift	Broken gearshift cam.	*Replace. ☞(Page 5B-3)*
	Distorted gearshift fork.	*Replace. ☞(Page 5B-3)*
	Worn gearshift pawl.	*Replace. ☞(Page 5B-14)*
Transmission will not shift back	Broken gearshift shaft return spring.	*Replace. ☞(Page 5B-14)*
	Rubbing or stuck gearshift shaft.	*Repair or replace. ☞(Page 5B-14)*
	Worn or distorted gearshift fork.	*Replace. ☞(Page 5B-3)*
Transmission jumps out of gear	Worn shifting gears on driveshaft or countershaft.	*Replace. ☞(Page 5B-5)*
	Worn or distorted gearshift fork.	*Replace. ☞(Page 5B-3)*
	Weakened gearshift cam stopper spring.	*Replace. ☞(Page 5B-14)*
	Worn gearshift cam plate.	*Replace. ☞(Page 5B-14)*

Repair Instructions

Transmission Components

BENL06L25206001

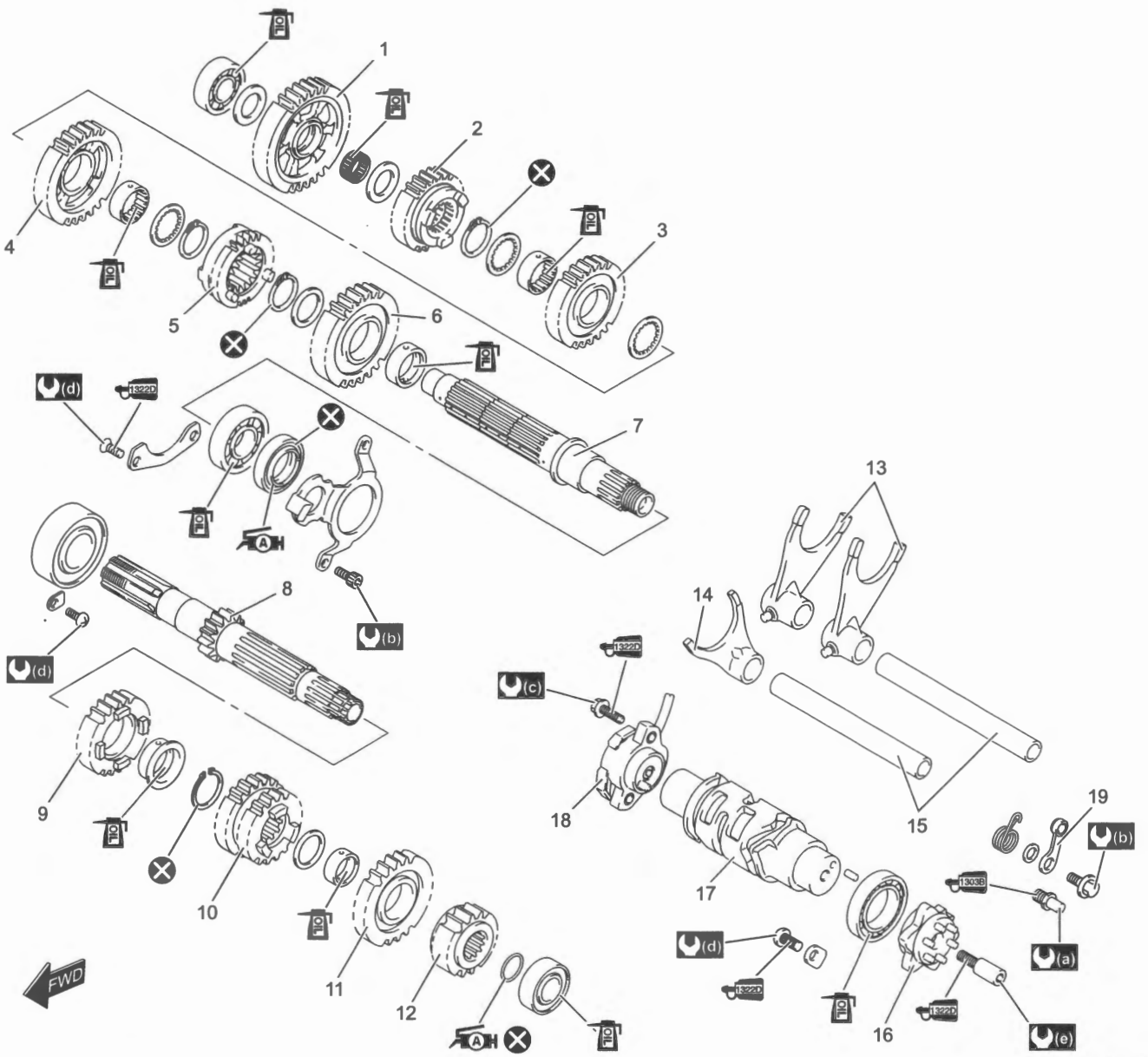

IL06L1520001-02

1. 1st driven gear	11. 6th drive gear	(b) : 10 N·m (1.0 kgf-m, 7.5 lbf-ft)
2. 5th driven gear	12. 2nd drive gear	(c) : 6 N·m (0.61 kgf-m, 4.45 lbf-ft)
3. 4th driven gear	13. Gearshift fork No. 1	(d) : 8.4 N·m (0.86 kgf-m, 6.20 lbf-ft)
4. 3rd driven gear	14. Gearshift fork No. 2	(e) : 13 N·m (1.3 kgf-m, 9.5 lbf-ft)
5. 6th driven gear	15. Gearshift fork shaft	: Apply engine oil.
6. 2nd driven gear	16. Gearshift cam plate	: Apply grease.
7. Driveshaft	17. Gearshift cam	1303E : Apply thread lock to thread part.
8. Countershaft/1st drive gear	18. GP switch	1322D : Apply thread lock to thread part.
9. 5th drive gear	19. Gearshift cam stopper	: Do not reuse.
10. 3rd/4th drive gear	(a) : 19 N·m (1.9 kgf-m, 14.0 lbf-ft)	

Transmission Removal and Installation

BENL06L25206002

Refer to "Crankcase Assembly Disassembly" in Section 1D (Page 1D-62) and "Crankcase Assembly Reassembly" in Section 1D (Page 1D-66).

Removal

1) Remove the gearshift fork shafts (1), gearshift forks (2) and gearshift cam (3).

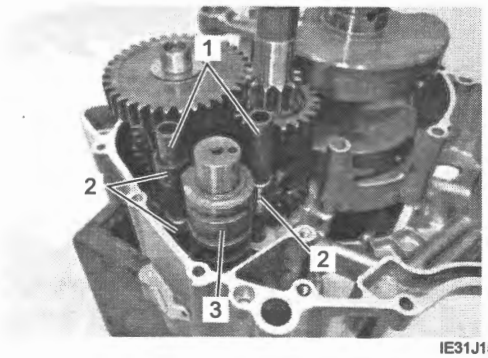

IE31J1520001-01

2) Remove the driveshaft assembly (1) with the countershaft assembly (2).

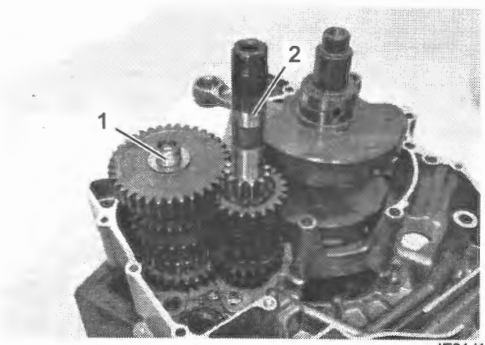

IE31J1520002-01

Installation

1) Install the driveshaft assembly (1) with the countershaft assembly (2).

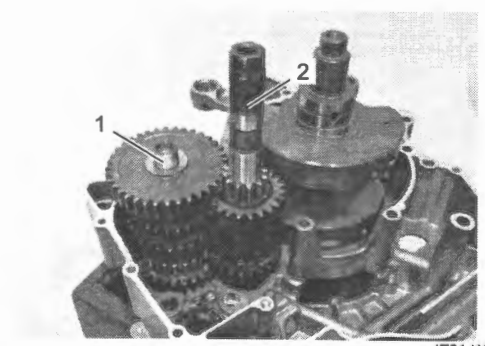

IE31J1520003-01

2) Install the gearshift forks No. 1 (1) and No. 2 (2).

NOTE

The gearshift forks No. 1 (1) are same parts.

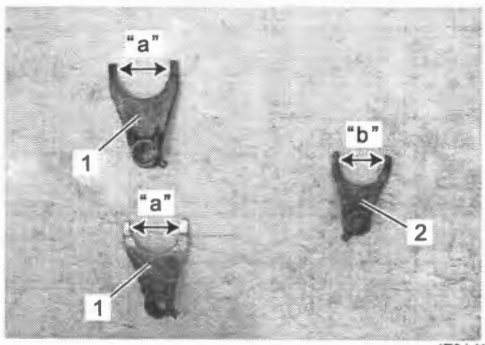

IE31J1520004-02

"a": 40 mm (1.6 in)
"b": 36 mm (1.4 in)

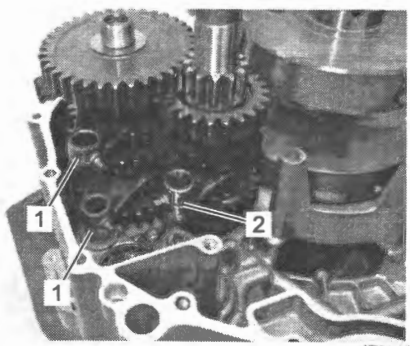

IE31J1520005-02

3) Install the gearshift cam (1) so that the hole (2) face upward.

4) Install the gearshift fork shafts (3).

NOTE

- **After the gearshift fork shafts and gearshift forks have been fitted, make sure that the gears engage normally.**
- **Set the transmission gears to the neutral position.**

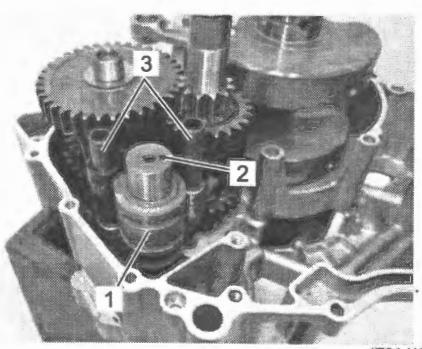

IE31J1520006-01

Transmission Construction

BENL06L25206003

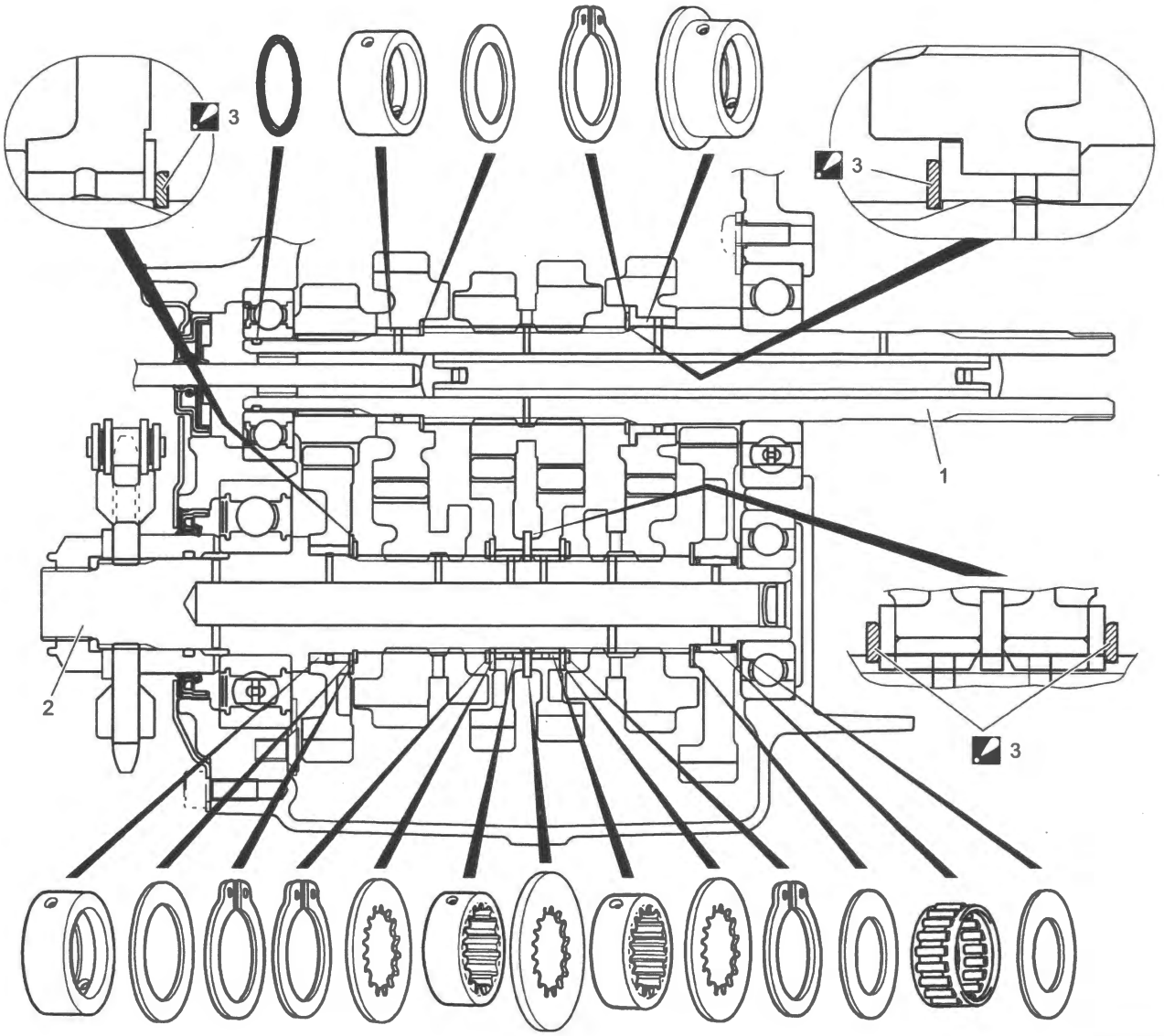

IE31J1520007-02

1. Countershaft	2. Driveshaft	3. Snap ring : Face the sharp edge outside.

Countershaft Assembly / Driveshaft Assembly Disassembly and Reassembly

BENL06L25206004

Refer to "Transmission Removal and Installation" (Page 5B-3).

Disassembly

NOTE

Identify the position of each removed part. Organize the parts in their respective groups (i.e., drive or driven) so that they can be reinstalled in their original positions.

Countershaft

1) Remove the O-ring (1), 2nd drive gear (2) and 6th drive gear (3).

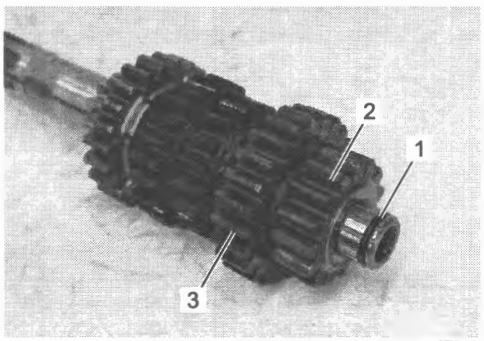

IE31J1520009-01

2) Remove the 6th drive gear bushing (1), washer (2), and 3rd/4th drive gear (3).

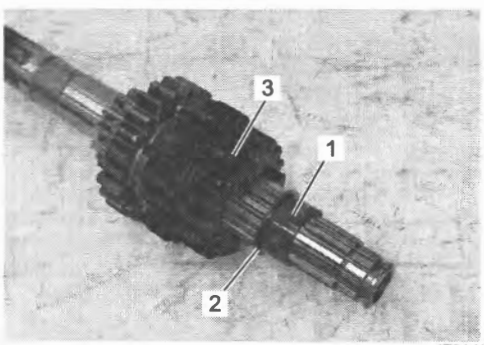

IE31J1520010-01

3) Remove the snap ring (1).

Special tool
09900–06107

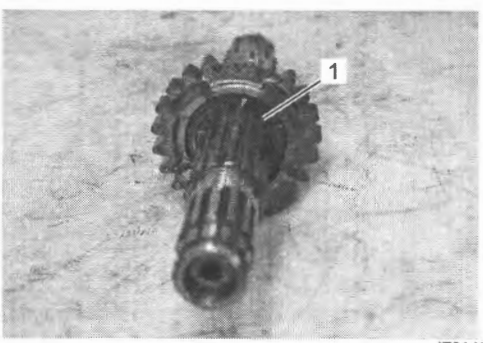

IE31J1520011-01

4) Remove the 5th drive gear bushing (1) and 5th drive gear (2).

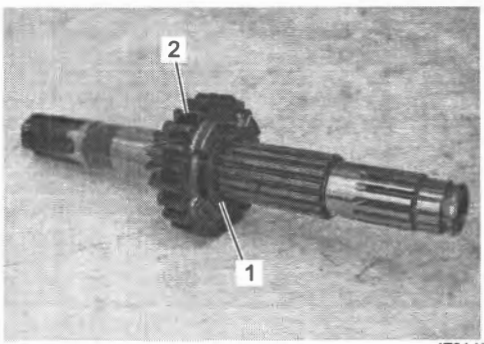

IE31J1520012-01

Driveshaft

1) Remove the washer (1) and 1st driven gear (2).

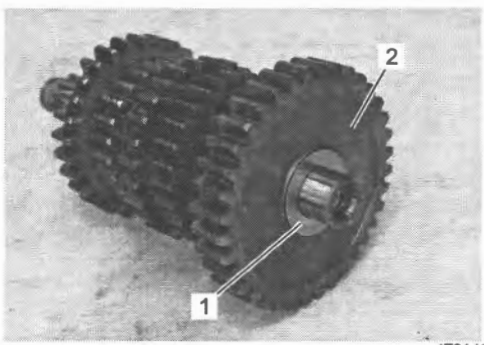

IE31J1520013-01

2) Remove the 1st driven gear bearing (1), washer (2) and 5th driven gear (3).

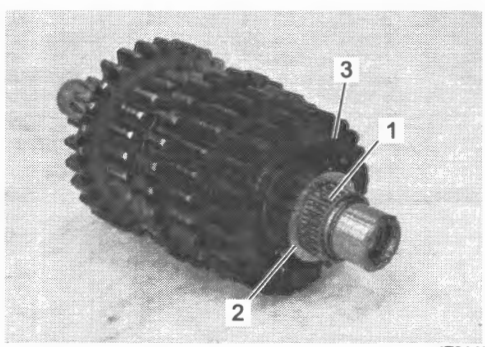

IE31J1520014-01

3) Remove the snap ring (1).

Special tool
09900–06107

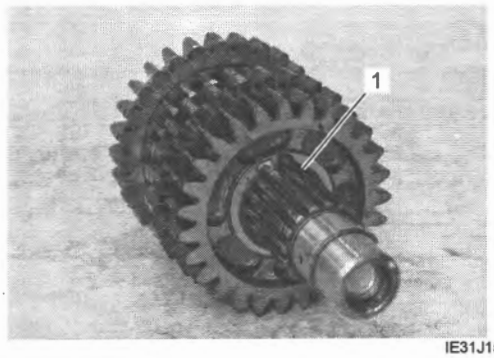

IE31J1520015-01

4) Remove the washer (1), 4th driven gear (2) and 4th driven gear bushing (3).

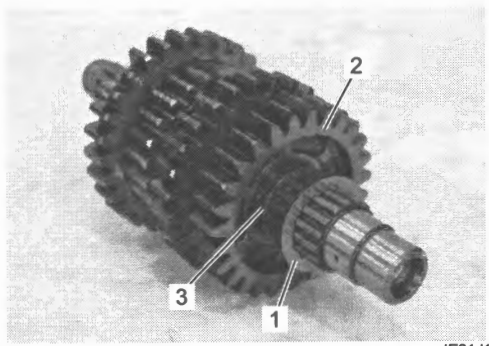

IE31J1520016-02

5) Remove the washer (1), 3rd driven gear (2) and 3rd driven gear bushing (3).

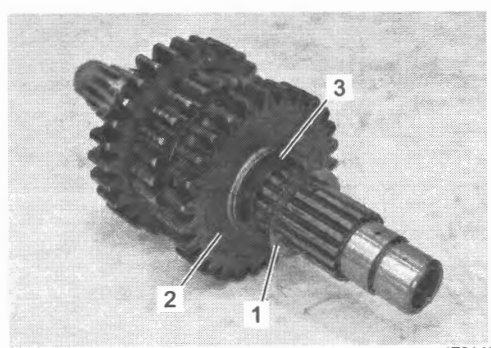

IE31J1520017-01

6) Remove the washer (1) and snap ring (2).

Special tool
09900–06107

7) Remove the 6th driven gear (3).

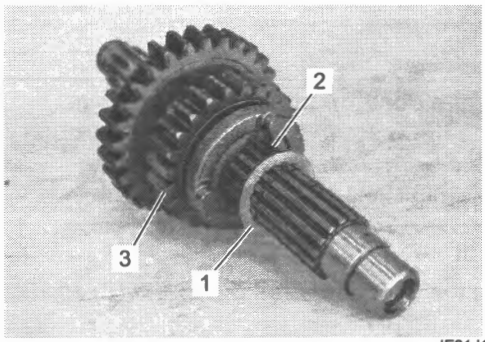

IE31J1520018-01

8) Remove the snap ring (1).

Special tool
09900–06107

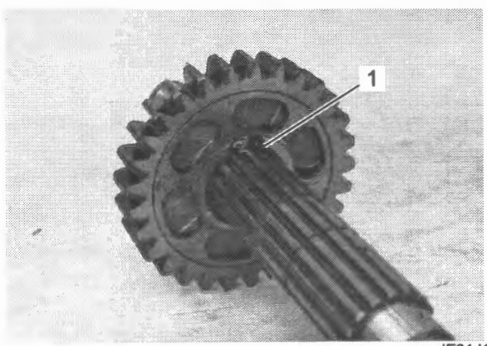

IE31J1520020-01

9) Remove the washer (1), 2nd driven gear (2) and 2nd driven gear bushing (3).

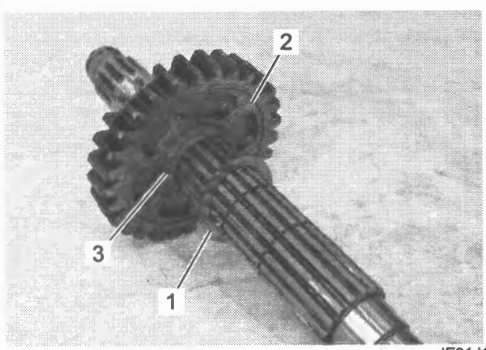

IE31J1520021-01

Reassembly

Reassemble the countershaft and driveshaft in the reverse order of disassembly. Pay attention to the following points:

NOTE

- **When reassembling the transmission gears, attention must be given to the locations and positions of washers and snap rings. The cross sectional view shows the correct position of the gears, bushings, washers and snap rings. Refer to "Transmission Construction" (Page 5B-4).**
- **When installing a new snap rings, do not expand the end gap larger than required to slip the snap rings over the shaft.**
- **After installing a snap rings, make sure that it is completely seated in its groove and securely fitted.**
- **Rotate the bearing to inspect for abnormal noises and smooth rotation. Replace the bearing if there is anything unusual.**
- **Before installing the gears, apply engine oil to each rotating and sliding part.**

- When installing a new snap ring (1), pay attention to its direction. Fit it to the side where the thrust (2) is as shown in the illustration.

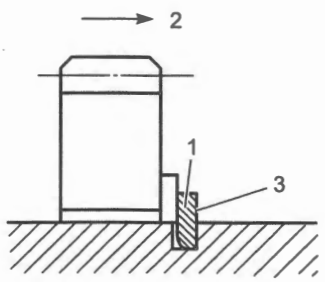

IE31J1520022-02

3. Sharp edge

Driveshaft

- When installing the 3rd driven gear bushing (1) onto the driveshaft, align the shaft oil hole (2) with the bushing oil hole (3).

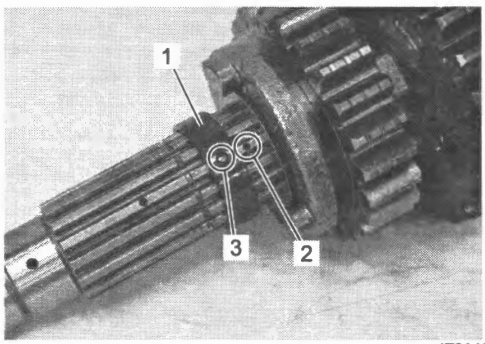

IE31J1520023-01

- When installing the 4th driven gear bushing (1) onto the driveshaft, align the shaft oil hole (2) with the bushing oil hole (3).

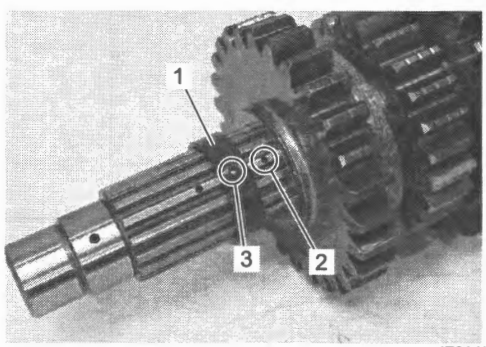

IE31J1520024-01

Countershaft

- Apply grease to the new O-ring (1).

  "A": Grease 99000–25011 (SUZUKI SUPER GREASE A)

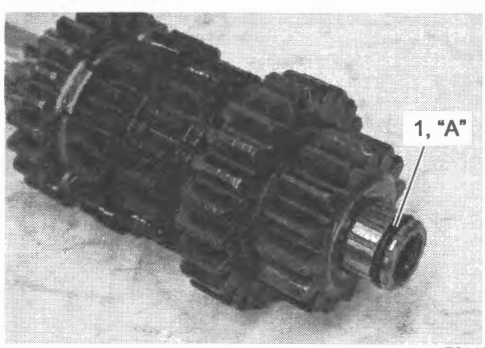

IE31J1520025-01

Gearshift Fork / Gearshift Cam Inspection

BENL06L25206005

Refer to "Countershaft Assembly / Driveshaft Assembly Disassembly and Reassembly" (Page 5B-5).

Gearshift Fork to Groove Clearance

NOTE

The clearance for each gearshift fork plays an important role in the smoothness and positiveness of the shifting action.

Using a thickness gauge, check the gearshift fork clearance in the groove of its gear.
If the clearance checked is noted to exceed the limit specified, replace the fork or its gear, or both.

Special tool
(A): 09900–20803

Gearshift fork to groove clearance
No. 1 [Standard]: 0.1 – 0.3 mm (0.004 – 0.011 in)
[Limit]: 0.5 mm (0.019 in)
No. 2 [Standard]: 0.1 – 0.3 mm (0.004 – 0.011 in)
[Limit]: 0.5 mm (0.019 in)

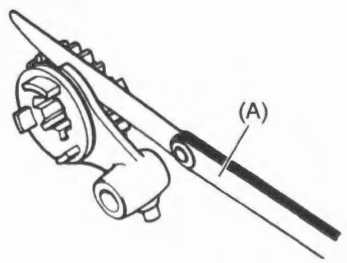

IE31J1520026-01

Gearshift Fork Groove Width

Measure the gearshift fork groove width using the vernier calipers.

Special tool
(A): 09900–20102

Gearshift fork groove width
No. 1 [Standard]: 5.0 – 5.1 mm (0.197 – 0.201 in)
No. 2 [Standard]: 5.0 – 5.1 mm (0.197 – 0.201 in)

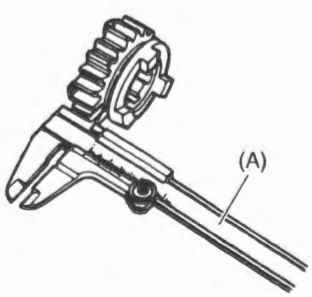

IE31J1520027-01

Gearshift Fork Thickness

Measure the gearshift fork thickness using the vernier calipers.

Special tool
(A): 09900–20102

Gearshift fork thickness
No. 1 [Standard]: 4.8 – 4.9 mm (0.189 – 0.193 in)
No. 2 [Standard]: 4.8 – 4.9 mm (0.189 – 0.193 in)

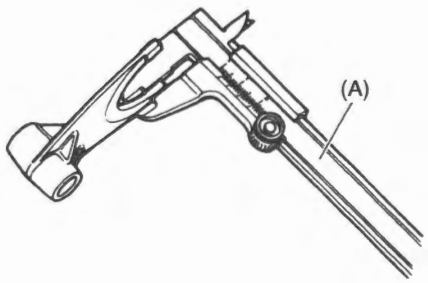

IE31J1520028-01

Gearshift Cam

Inspect the gearshift cam groove for abnormal wear and damage. If any defects are found, replace the gearshift cam with a new one.



IE31J1520029-01

Left Crankcase Bearing / Oil Seal Removal and Installation

BENL06L25206006

Refer to "Crankshaft Assembly Removal and Installation" in Section 1D (Page 1D-70) and "Transmission Removal and Installation" (Page 5B-3).

Removal

1) Remove the oil seal retainer (1).

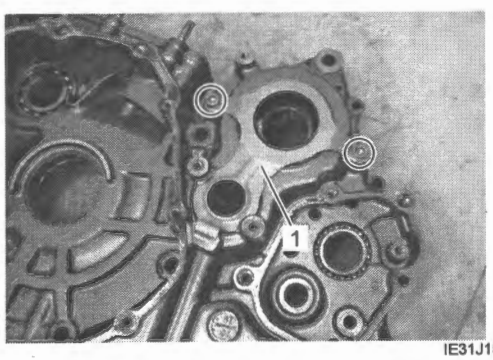

IE31J1520030-01

2) Remove the clutch push rod oil seal (1).
3) Remove the driveshaft oil seal (2) using the special tool.

Special tool
(A): 09913–50121

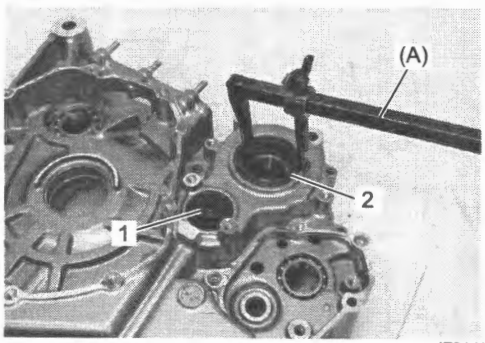

IE31J1520031-01

4) Remove the bearing retainers (1).
5) Remove the gearshift cam bearing (2).

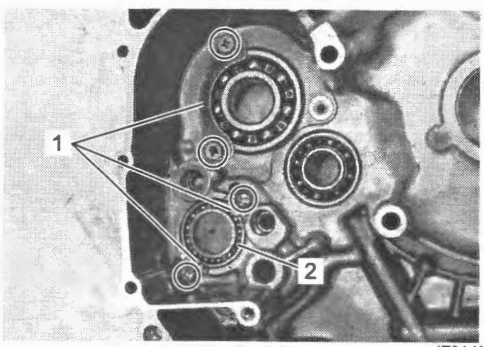

IE31J1520032-01

6) Remove the countershaft bearing (1) and driveshaft bearing (2) using the special tool.

Special tool
(A): 09913–70210

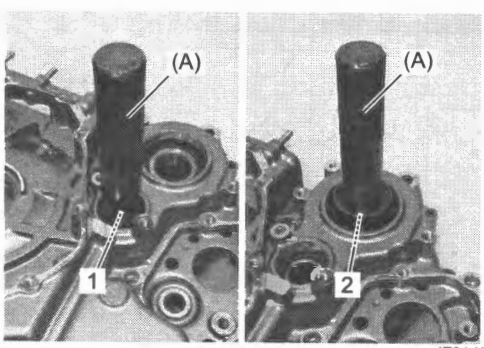

IE31J1520033-01

Installation

1) Install the new driveshaft bearing (1) and new countershaft bearing (2) using the special tool.

NOTE

The sealed side (3) of the bearings faces outside.

Special tool
(A): 09913–70210

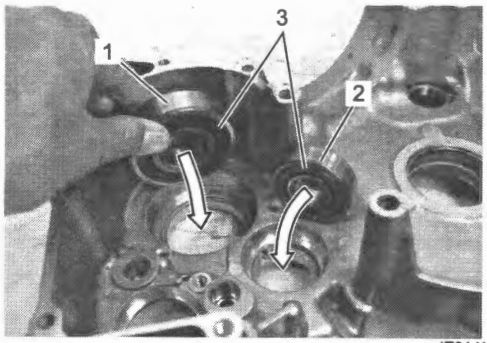

IE31J1520034-01

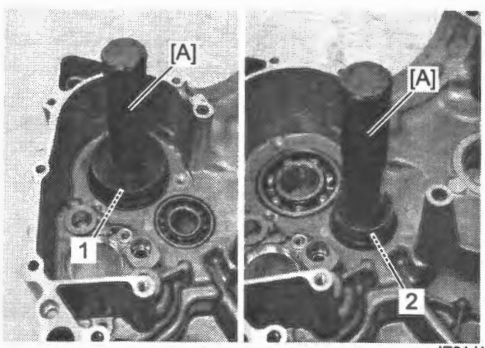

IE31J1520035-01

2) Install the gearshift cam bearing (1).

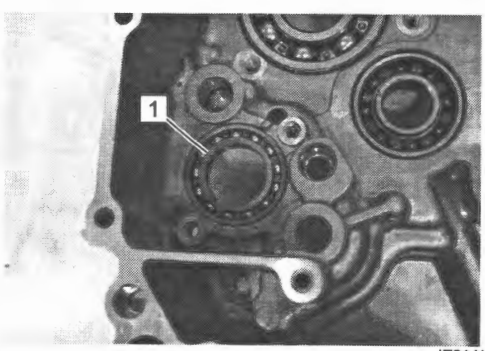

IE31J1520036-01

3) Apply thread lock to the bearing retainer screws (1).

"A": Thread lock cement 99000–32150 (THREAD LOCK CEMENT 1322D)

4) Install the bearing retainers (2) and tighten the bearing retainer screws to the specified torque.

Tightening torque
Gearshift cam bearing retainer screw (a): 8.4 N·m (0.86 kgf-m, 6.20 lbf-ft)
Driveshaft bearing retainer screw (b): 8.4 N·m (0.86 kgf-m, 6.20 lbf-ft)

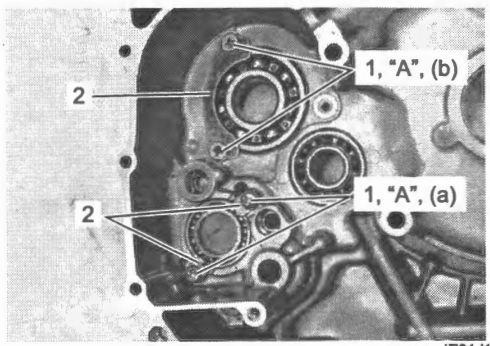

IE31J1520037-02

5) Install the new driveshaft oil seal (1) and new clutch push rod oil seal (2) using the special tool.

Special tool
(A): 09913–70210

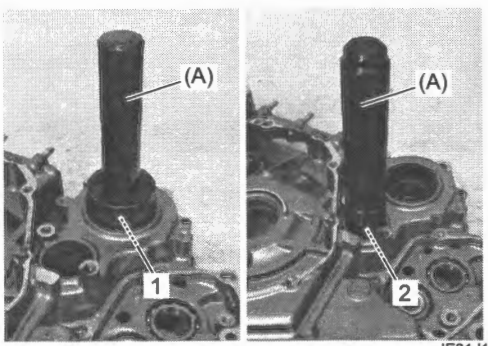

IE31J1520039-01

6) Apply grease to the oil seal lips.

"A": Grease 99000–25011 (SUZUKI SUPER GREASE A)

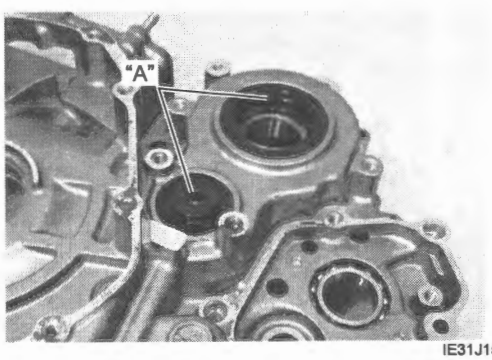

IE31J1520040-01

7) Install the oil seal retainer (1) and tighten its bolts to the specified torque.

Tightening torque
Driveshaft oil seal retainer bolt (a): 10 N·m (1.0 kgf-m, 7.5 lbf-ft)

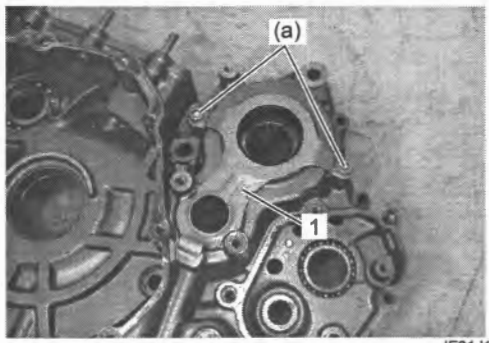

IE31J1520041-01

Right Crankcase Bearing Removal and Installation

BENL06L25206007

Refer to "Crankcase Assembly Disassembly" in Section 1D (Page 1D-62) and "Crankcase Assembly Reassembly" in Section 1D (Page 1D-66).

Removal

1) Remove the bearing retainer (1).

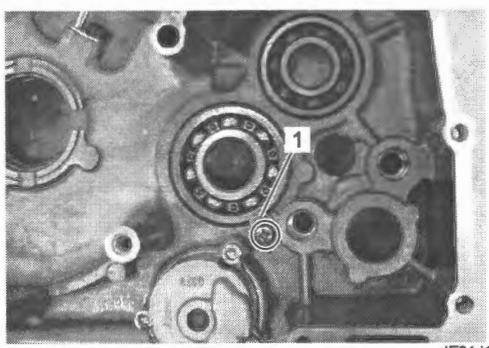

IE31J1520042-01

2) Remove the countershaft bearing (1) using the special tool.

Special tool
(A): 09913–70210

3) Remove the driveshaft bearing (2) using the special tool.

Special tool
(B): 09921–20240

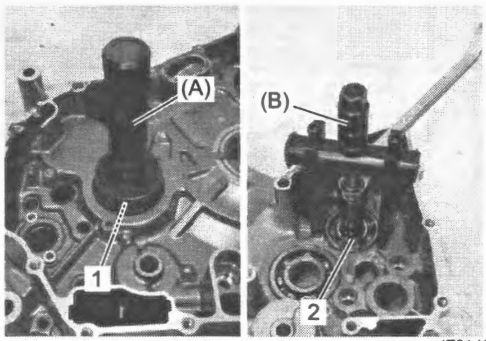

IE31J1520043-02

Installation

1) Install the new driveshaft bearing (1) and new countershaft bearing (2) using the special tool.

Special tool
(A): 09913–70210

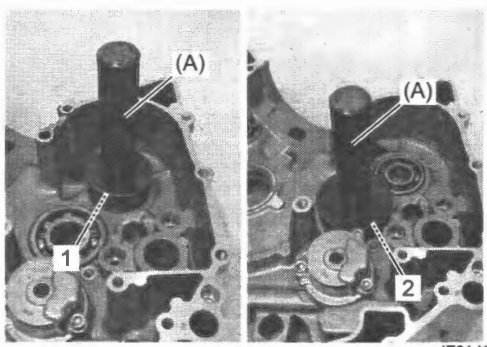

IE31J1520044-01

2) Install the bearing retainer (1) and tighten its screw to the specified torque.

Tightening torque
Countershaft bearing retainer screw (a): 8.4 N·m (0.86 kgf-m, 6.20 lbf-ft)

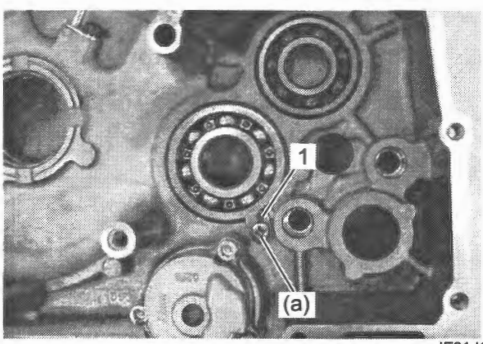

IE31J1520045-01

Transmission Bearing / Oil Seal Inspection

BENL06L25206008

Refer to "Crankcase Bearing / Oil Seal Inspection" in Section 1D (Page 1D-76).

GP Switch Inspection

BENL06L25206009

Neutral Switch

1) Turn the ignition switch OFF.
2) Remove the frame front cover (RH). ☞(Page 9D-30)
3) Disconnect the GP switch coupler (1).



IL06L1520002-01

4) Check the continuity between "T1" and ground with the transmission in "NEUTRAL". If any defect is found, replace the GP switch with a new one.

Terminal / Position	T1	Ground
Neutral	○	○
Except neutral		

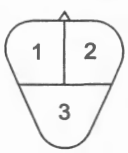

IL06L1520005-01

Gear Position Switch

1) Turn the ignition switch ON.
2) Remove the frame front cover (RH). ☞(Page 9D-30)
3) Measure the voltage between "T2" and "T3" lead wires when shifting the gearshift lever from low to top.

GP switch voltage
1st [Standard]: 1.71 – 1.89 V
2nd [Standard]: 2.15 – 2.37 V
3rd [Standard]: 2.85 – 3.15 V
4th [Standard]: 3.48 – 3.84 V
5th [Standard]: 4.23 – 4.49 V
6th [Standard]: 4.56 – 4.82 V

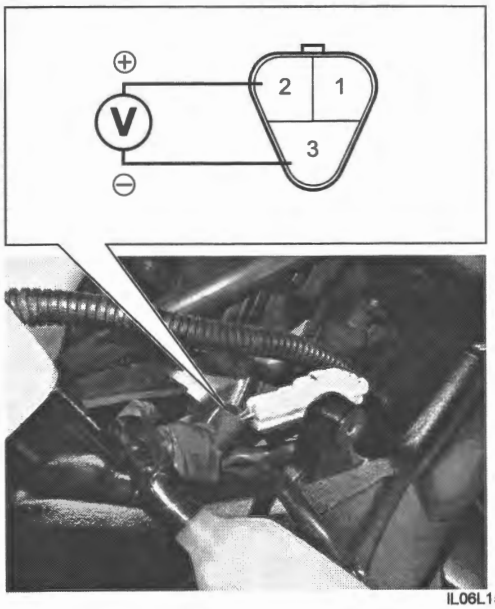

IL06L1520006-01

4) Turn the ignition switch OFF.

GP Switch Removal and Installation

BENL06L25206010

Removal

1) Turn the ignition switch OFF.
2) Remove the frame front cover (RH). ☞(Page 9D-30)
3) Disconnect the GP switch coupler (1).



IL06L1520002-01

4) Remove the clutch component parts. ☞(Page 5C-15)
5) Remove the grommet (1), GP switch lead wire clamp (2) and GP switch (3).

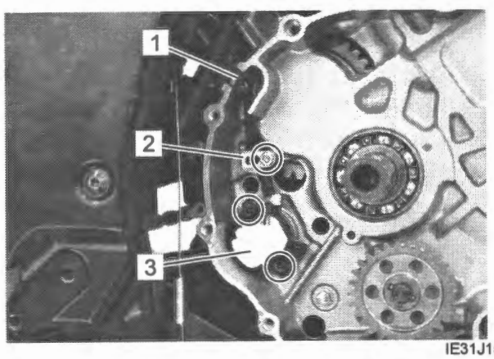

IE31J1520048-02

Installation

Install the GP switch in the reverse order of removal. Pay attention to the following points:

- Align the GP switch pin (1) with the gearshift cam hole (2).

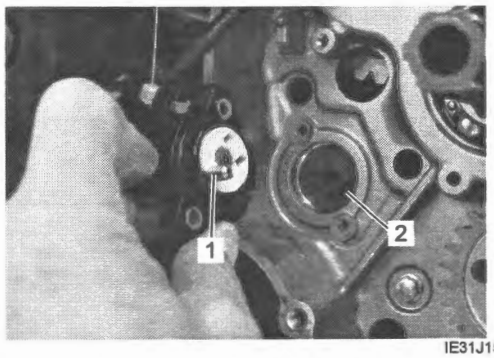

IE31J1520049-01

- Apply thread lock to the GP switch mounting bolts (1) and tighten them to the specified torque.

  "A": Thread lock cement 99000–32150 (THREAD LOCK CEMENT 1322D)

  Tightening torque
  GP switch mounting bolt (a): 6 N·m (0.61 kgf-m, 4.45 lbf-ft)

- Tighten the GP switch lead wire clamp bolt (2) to the specified torque.

  Tightening torque
  GP switch lead wire clamp bolt (b): 6.5 N·m (0.66 kgf-m, 4.80 lbf-ft)

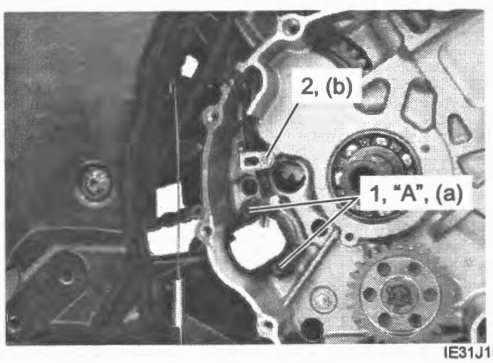

IE31J1520050-01

- Route the GP switch lead wire. Refer to "Wiring Harness Routing Diagram" in Section 9A (Page 9A-23).

Gearshift Lever Removal and Installation

BENL06L25206011

Refer to "Gearshift Lever Construction" (Page 5B-13).

Removal

Remove the gearshift lever.

Installation

1) Install the gearshift lever.
2) Check the gearshift lever height. ☞(Page 5B-13)

Gearshift Lever Height Inspection and Adjustment

BENL06L25206012

Inspection

Inspect the gearshift lever height "a" between the pedal top face and footrest.
Adjust the gearshift lever height if necessary.

Gearshift lever height "a"
Standard: 20 – 30 mm (0.8 – 1.2 in)

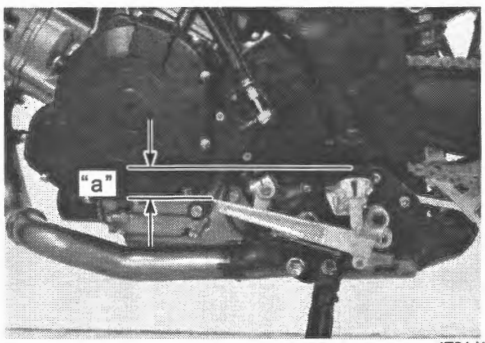

IE31J1520052-01

Adjustment

1) Loosen the lock-nuts (1) and (2).
2) Turn the gearshift link rod (3) in or out until the gearshift lever height is within the specification.

Gearshift lever height
Standard: 20 – 30 mm (0.8 – 1.2 in)

3) Tighten the lock-nuts (1) and (2) to the specified torque.

NOTE

This lock nut (2) has left-hand threads.

Tightening torque
Gearshift link rod lock-nut (a): 10 N·m (1.0 kgf-m, 7.5 lbf-ft)

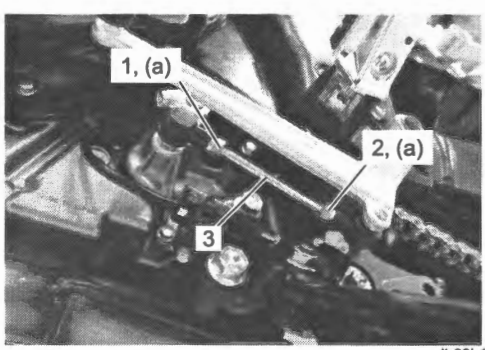

IL06L1520003-01

Gearshift Lever Construction

BENL06L25206013

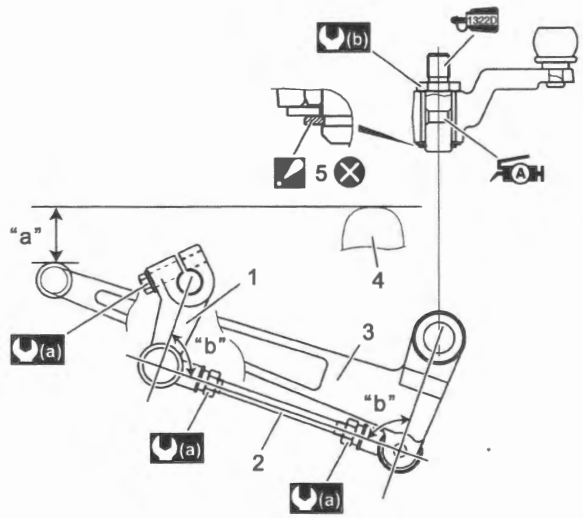

IE31J1520051-04

1. Gearshift link arm	"b": 90°
2. Gearshift link rod	(a) : 10 N·m (1.0 kgf-m, 7.5 lbf-ft)
3. Gearshift lever	(b) : 40 N·m (4.1 kgf-m, 29.5 lbf-ft)
4. Footrest	1322D : Apply thread lock to thread part.
5. Snap ring : Face the sharp edge outside.	AH : Apply grease.
"a": 20 – 30 mm (0.8 – 1.2 in)	⊗ : Do not reuse.

Gearshift Shaft / Gearshift Cam Plate Components

BENL06L25206014

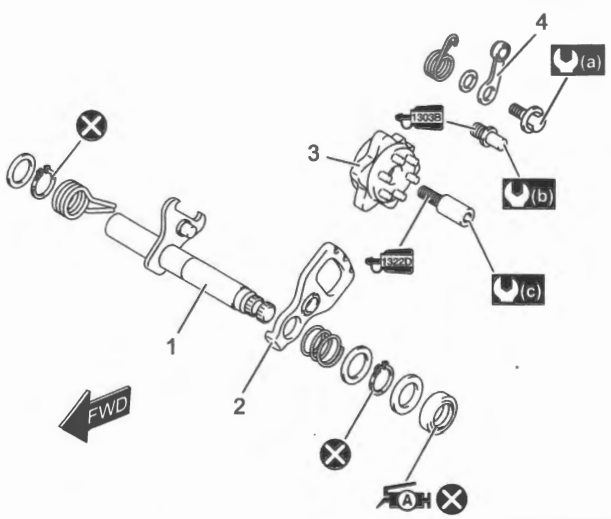

IL06L1520004-01

1. Gearshift shaft	(c) : 13 N·m (1.3 kgf-m, 9.5 lbf-ft)
2. Gearshift cam drive plate	1303B : Apply thread lock to thread part.
3. Gearshift cam plate	1322D : Apply thread lock to thread part.
4. Gearshift cam stopper	AH : Apply grease to oil seal lip.
(a) : 10 N·m (1.0 kgf-m, 7.5 lbf-ft)	⊗ : Do not reuse.
(b) : 19 N·m (1.9 kgf-m, 14.0 lbf-ft)	

Gearshift Shaft / Gearshift Cam Plate Removal and Installation

BENL06L25206015

Refer to "Engine Assembly Removal" in Section 1D (Page 1D-22) and "Engine Assembly Installation" in Section 1D (Page 1D-25).

Removal

1) Remove the gearshift cover (1).

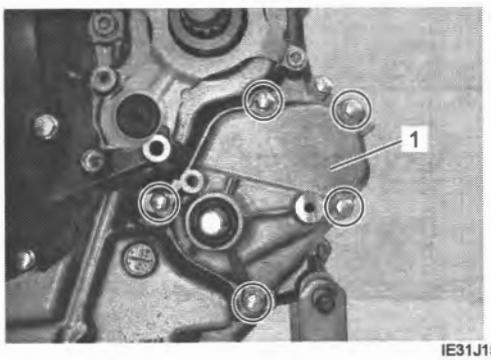

IE31J1520054-01

2) Remove the gasket (1) and dowel pins (2).

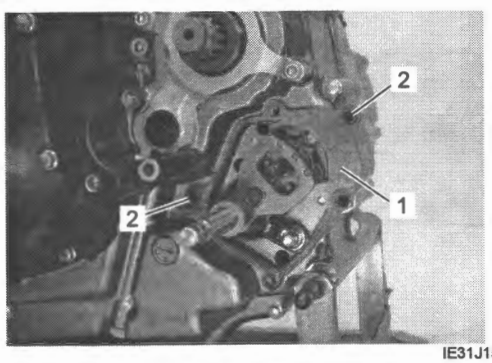

IE31J1520055-01

3) Remove the gearshift shaft assembly (1).



IE31J1520056-01

4) Remove the following parts from the gearshift shaft (1).
   - Washer (2)
   - Snap ring (3)
   - Spring (4)
   - Gearshift cam drive plate (5)
   - Gearshift shaft return spring (6)

Special tool
09900–06107

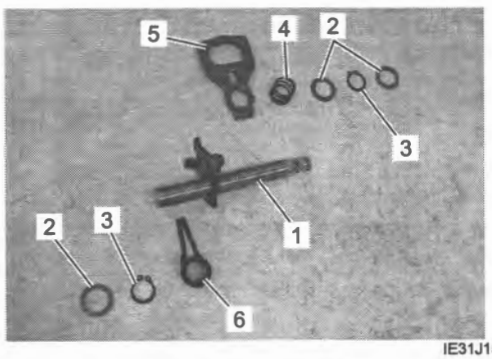

IE31J1520057-01

5) Remove the gearshift cam plate bolt (1) and gearshift cam plate (2).
6) Remove the gearshift cam stopper (3).

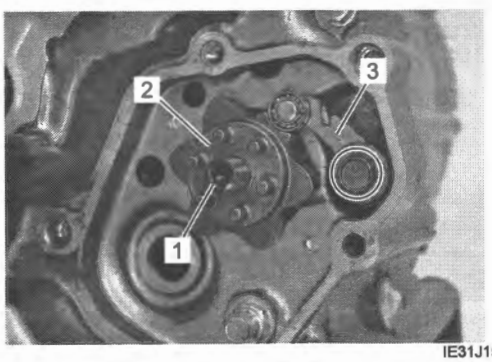

IE31J1520058-01

7) Remove the gearshift arm stopper (1).

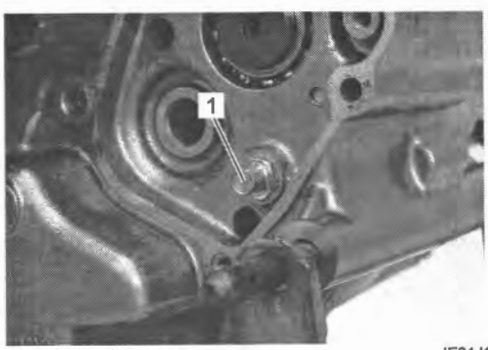

IE31J1520059-01

Installation

1) Apply a small quantity of thread lock to the gearshift arm stopper (1) and tighten it to the specified torque.

"A": Thread lock cement 99000–32030 (THREAD LOCK CEMENT 1303B)

Tightening torque
Gearshift arm stopper (a): 19 N·m (1.9 kgf-m, 14.0 lbf-ft)

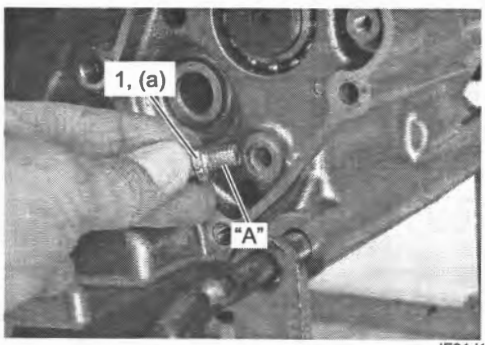

IE31J1520060-01

2) Install the gearshift cam stopper (1), bolt (2), washer (3) and spring (4).
3) Tighten the gearshift cam stopper bolt (2) to the specified torque.

NOTE

Hook the return spring end (5) to the gearshift cam stopper (1).

Tightening torque
Gearshift cam stopper bolt (a): 10 N·m (1.0 kgf-m, 7.5 lbf-ft)

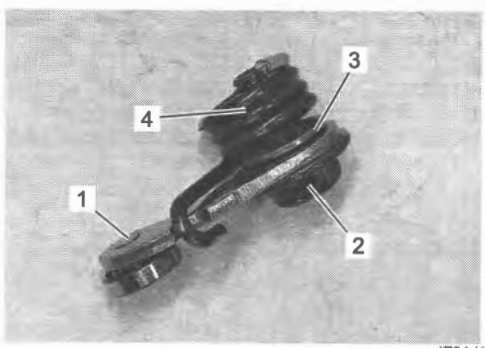

IE31J1520061-01

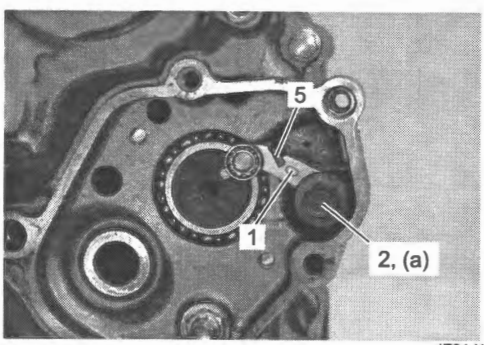

IE31J1520062-01

4) Check the gearshift cam stopper moves smoothly.
5) Locate the gearshift cam in the neutral position.
6) Install the gearshift cam plate (1).

NOTE

Align the gearshift cam pin (2) with the gearshift cam plate hole (3).

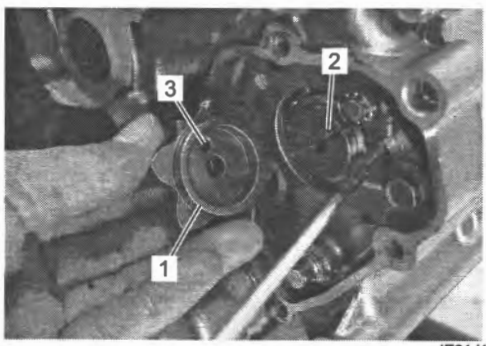

IE31J1520063-01

7) Apply a small quantity of thread lock to the gearshift cam plate bolt (1) and tighten it to the specified torque.

"A": Thread lock cement 99000–32150 (THREAD LOCK CEMENT 1322D)

Tightening torque
Gearshift cam plate bolt (a): 13 N·m (1.3 kgf-m, 9.5 lbf-ft)

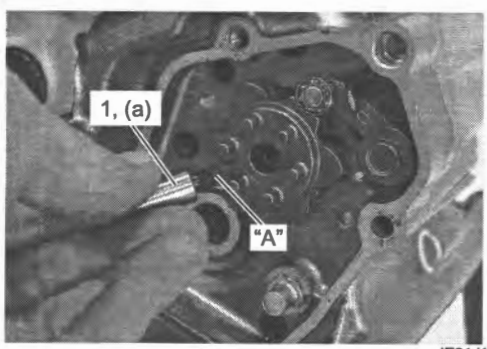

IE31J1520064-01

8) Install the gearshift shaft return spring (1).

NOTE

Position the stopper (2) of gearshift arm between the shaft return spring ends (3).

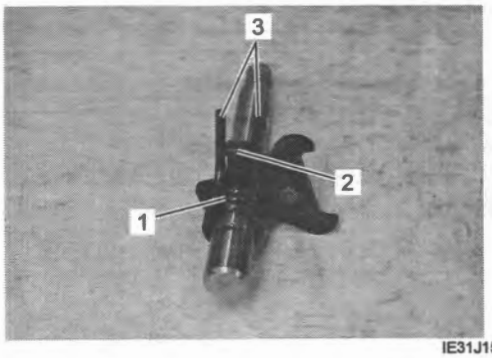

IE31J1520065-01

9) Install the following parts.

- New snap ring (1)
- Gearshift cam drive plate (2)
- Spring (3)
- Washer (4)

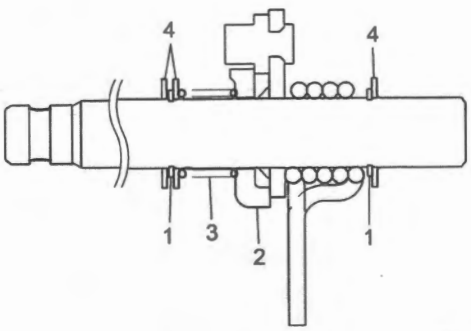

IE31J1520066-02

10) Install the gearshift shaft assembly (1).

NOTE

Pinch the gearshift arm stopper (2) with return spring ends (3).

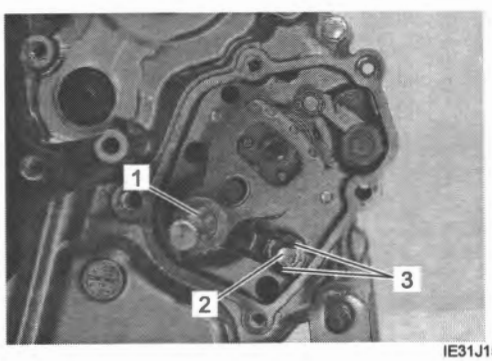

IE31J1520067-01

11) Install the dowel pins (1) and new gasket (2).

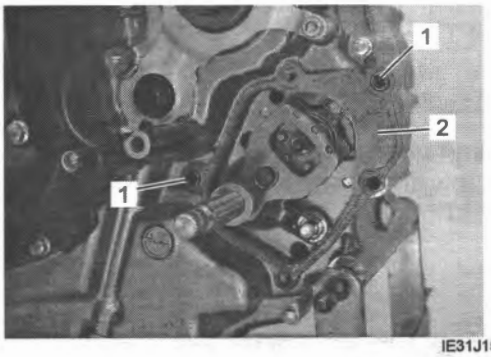

IE31J1520068-01

12) Install the gearshift cover (1) and tighten its bolts to the specified torque.

NOTE

Fit the clamp (2) to the bolt.

Tightening torque
Gearshift cover bolt (a): 11 N·m (1.1 kgf-m, 8.5 lbf-ft)

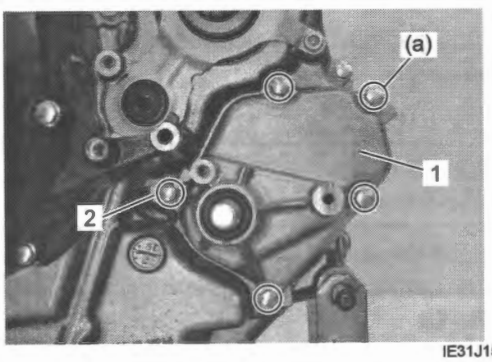

IE31J1520069-01

Gearshift Linkage Inspection

BENL06L25206016

Refer to "Gearshift Shaft / Gearshift Cam Plate Removal and Installation" (Page 5B-14).

Gearshift Shaft

Check the gearshift shaft (1) for bend or wear.
Check the return spring (2) for damage or fatigue.
If any defects are found, replace the defective part(-s).

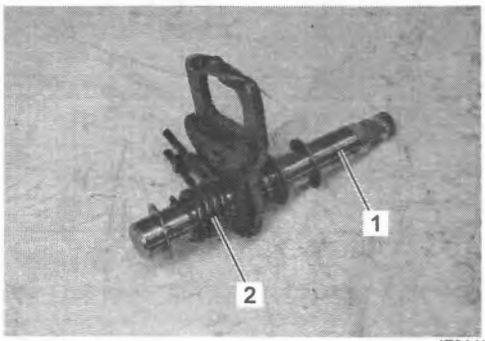

IE31J1520070-01

Gearshift Shaft Oil Seal

Inspect the gearshift shaft oil seal lip (1) for damage or wear. If any defect is found, replace the oil seal with a new one.

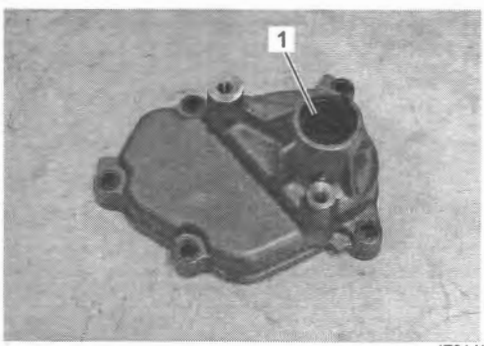

IE31J1520071-01

Gearshift Shaft Oil Seal Removal and Installation

BENL06L25206017

Removal

1) Remove the gearshift cover. ☞(Page 5B-14)
2) Remove the gearshift shaft oil seal (1).

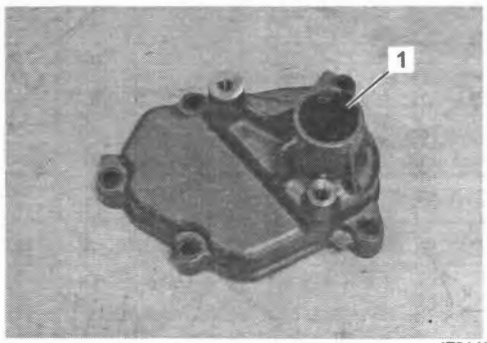

IE31J1520072-01

Installation

1) Install the new oil seal (1) with the special tool.

   Special tool
   (A): 09913–70210

2) Apply grease to the oil seal lip.

   "A": Grease 99000–25011 (SUZUKI SUPER GREASE A)

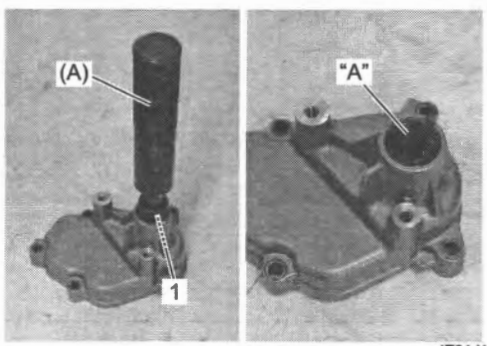

IE31J1520073-01

Specifications

Tightening Torque Specifications

BENL06L25207001

Fastening part	Tightening torque			Note
	N·m	kgf-m	lbf-ft	
Gearshift cam bearing retainer screw	8.4	0.86	6.20	☞(Page 5B-10)
Driveshaft bearing retainer screw	8.4	0.86	6.20	☞(Page 5B-10)
Driveshaft oil seal retainer bolt	10	1.0	7.5	☞(Page 5B-10)
Countershaft bearing retainer screw	8.4	0.86	6.20	☞(Page 5B-11)
GP switch mounting bolt	6	0.61	4.45	☞(Page 5B-12)
GP switch lead wire clamp bolt	6.5	0.66	4.80	☞(Page 5B-12)
Gearshift link rod lock-nut	10	1.0	7.5	☞(Page 5B-13)
Gearshift arm stopper	19	1.9	14.0	☞(Page 5B-15)
Gearshift cam stopper bolt	10	1.0	7.5	☞(Page 5B-15)
Gearshift cam plate bolt	13	1.3	9.5	☞(Page 5B-15)
Gearshift cover bolt	11	1.1	8.5	☞(Page 5B-16)

Reference:
For the tightening torques of fasteners not specified in this page, refer to:
"Transmission Components" (Page 5B-2)
"Gearshift Lever Construction" (Page 5B-13)
"Gearshift Shaft / Gearshift Cam Plate Components" (Page 5B-13)
"Fasteners Information" in Section 0C (Page 0C-10)

Special Tools and Equipment

Recommended Service Material

BENL06L25208001

Material	SUZUKI recommended product or Specification		Note
Grease	SUZUKI SUPER GREASE A	P/No.: 99000–25011	☞(Page 5B-7) / ☞(Page 5B-10) / ☞(Page 5B-17)
Thread lock cement	THREAD LOCK CEMENT 1303B	P/No.: 99000–32030	☞(Page 5B-15)
	THREAD LOCK CEMENT 1322D	P/No.: 99000–32150	☞(Page 5B-10) / ☞(Page 5B-12) / ☞(Page 5B-15)

NOTE

Required service material(s) is also described in:
"Transmission Components" (Page 5B-2)
"Gearshift Lever Construction" (Page 5B-13)
"Gearshift Shaft / Gearshift Cam Plate Components" (Page 5B-13)

Special Tool

BENL06L25208002

09900–06107 Snap ring pliers (External) ☞(Page 5B-5) / ☞(Page 5B-6) / ☞(Page 5B-6) / ☞(Page 5B-6) / ☞(Page 5B-14)	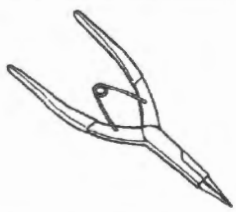
09900–20102 Vernier calipers (200 mm) ☞(Page 5B-8) / ☞(Page 5B-8)	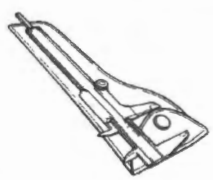
09900–20803 Thickness gauge ☞(Page 5B-8)	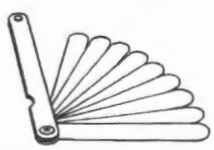
09913–50121 Oil seal remover ☞(Page 5B-9)	
09913–70210 Bearing installer set ☞(Page 5B-9) / ☞(Page 5B-9) / ☞(Page 5B-10) / ☞(Page 5B-11) / ☞(Page 5B-11) / ☞(Page 5B-17)	
09921–20240 Bearing remover set ☞(Page 5B-11)	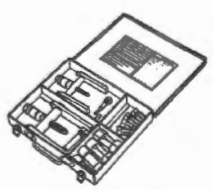

Clutch

Precautions

Precautions for Clutch System

BENL06L25300001

Refer to "General Precautions" in Section 00 (Page 00-1).

Clutch Fluid (Brake Fluid) Information

BENL06L25300002

⚠ WARNING

- **This clutch control system is filled with an ethylene glycol-based DOT 4 brake fluid. Do not use or mix different types of fluid, such as silicone-based or petroleum-based.**
- **Do not use any brake fluid taken from old, used or unsealed containers. Never reuse brake fluid left over from the last servicing or which has been stored for a long period of time.**
- **When storing brake fluid, seal the container completely and keep it away from children.**
- **When replenishing brake fluid, take care not to get dust into the fluid.**
- **When washing clutch control system components, use new brake fluid. Never use cleaning solvent.**
- **Clutch hose seal washers should be replaced with the new ones to prevent fluid leakage.**

NOTICE

The brake fluid is damaging to painted surfaces, plastics and rubber materials, and do not allow the fluid to spill on the surrounding parts.
If the fluid is spilled, flush it with water immediately.

Schematic and Routing Diagram

Clutch Hose Routing Diagram

BENL06L25302001

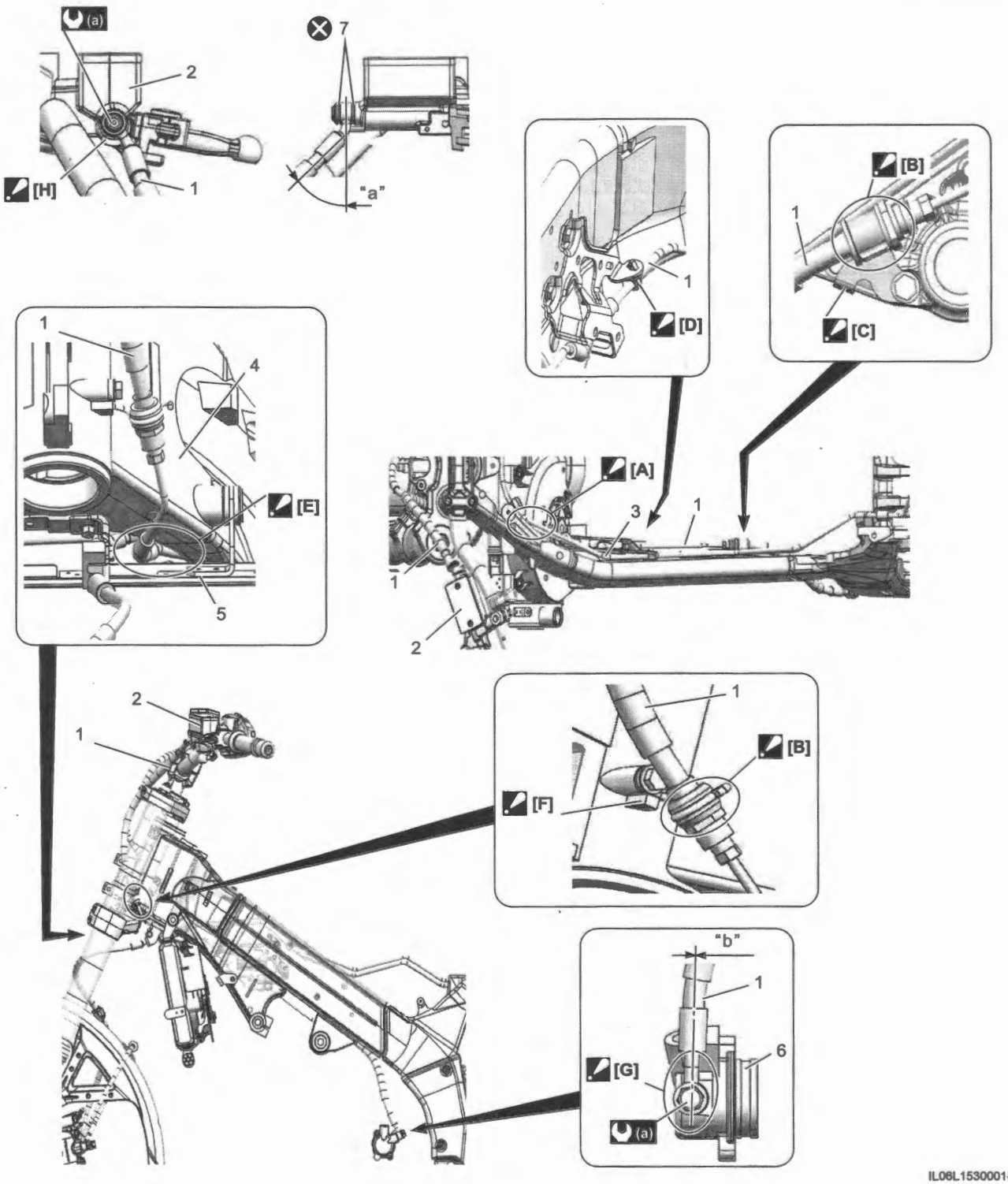

IL06L1530001-01

[A]: Pass the clutch hose under the brake pipes.	[H]: After the clutch hose union has contacted the stopper of clutch master cylinder, tighten the bolt to the specified torque.	7. Washer
[B]: Install the clutch hose sleeve to the clamp firmly.	1. Clutch hose	"a": 56°
[C]: After the stopper of clutch hose holder has contacted the frame, tighten the bolt to the specified torque.	2. Clutch master cylinder	"b": 0°
[D]: Align the hose clamps with the marking on the clutch hose.	3. Brake pipe	(a) : 23 N·m (2.3 kgf-m, 17.0 lbf-ft)
[E]: Pass the clutch hose between the frame and radiator.	4. Frame	: Do not reuse.
[F]: After the clutch hose union has contacted the stopper of frame, tighten the bolt to the specified torque.	5. Radiator	
[G]: After the clutch hose union has contacted the stopper of clutch release cylinder, tighten the bolt to the specified torque.	6. Clutch release cylinder	

Diagnostic Information and Procedures

Clutch System Symptom Diagnosis

BENL06L25304001

Condition	Possible cause	Correction / Reference Item
Noisy engine (Noise seems to come from the clutch)	Worn countershaft spline.	*Replace countershaft. ☞(Page 5B-5)*
	Worn clutch sleeve hub spline.	*Replace clutch sleeve hub. ☞(Page 5C-15) ☞(Page 5C-17)*
	Worn clutch plate teeth.	*Replace clutch plate. ☞(Page 5C-15) ☞(Page 5C-17)*
	Distorted clutch plates, driven and drive.	*Replace. ☞(Page 5C-15) ☞(Page 5C-17)*
	Worn clutch release bearing.	*Replace. ☞(Page 5C-15) ☞(Page 5C-17)*
	Weakened clutch dampers.	*Replace primary driven gear. ☞(Page 5C-15) ☞(Page 5C-17)*
	Worn or rubbing primary gears.	*Replace. ☞(Page 5C-15) ☞(Page 5C-17) ☞(Page 5C-25)*
Clutch slips	Weakened clutch springs.	*Replace. ☞(Page 5C-15) ☞(Page 5C-17)*
	Worn or distorted clutch pressure plate.	*Replace. ☞(Page 5C-15) ☞(Page 5C-17)*
	Distorted clutch plates.	*Replace. ☞(Page 5C-15) ☞(Page 5C-17)*
Clutch drags	Leakage of clutch fluid.	*Repair or replace.*
	Worn or damaged clutch master cylinder/release cylinder.	*Replace. ☞(Page 5C-9) ☞(Page 5C-13)*
	Some clutch springs are weak, while others are not.	*Replace. ☞(Page 5C-15) ☞(Page 5C-17)*
	Worn or distorted clutch pressure plate.	*Replace. ☞(Page 5C-15) ☞(Page 5C-17)*
	Distorted clutch plates.	*Replace. ☞(Page 5C-15) ☞(Page 5C-17)*
Leakage of clutch fluid	Leakage of clutch fluid from system.	*Repair or replace.*
Excessive clutch lever stroke	Air in hydraulic system.	*Bleed air. ☞(Page 5C-5)*

Repair Instructions

Clutch Lever Position Switch Inspection

BENL06L25306001

1) Disconnect the clutch lever position switch lead wire connectors (1) from the clutch lever position switch.

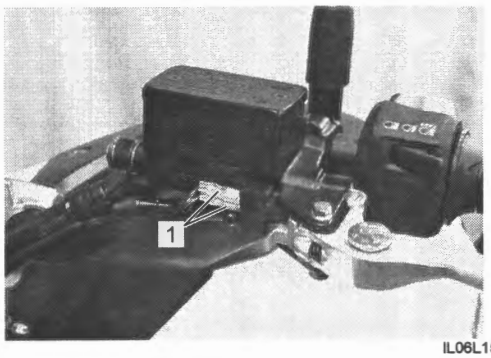

IL06L1530002-02

2) Inspect the clutch lever position switch for continuity between "T1" and "T2" with the tester.
If any abnormality is found, replace the switch with a new one. ☞(Page 5C-9)

Terminal / Position	T1	T2
Free		
Grasped	○	○

IL41K1410066-01

3) Connect the clutch lever position switch lead wire connectors to the clutch lever position switch.

Clutch Fluid Level Inspection

BENL06L25306002

Refer to "Clutch Fluid" in Section 0B (Page 0B-18).

Clutch Hose Inspection

BENL06L25306003

Refer to "Clutch Hose" in Section 0B (Page 0B-17).

Air Bleeding from Clutch Line

BENL06L25306004

The clutch line must be purged of air in the following manner:

1) Place the motorcycle on a level surface and keep the handlebar straight.
2) Fill the master cylinder reservoir with new clutch fluid to the top of the inspection window (1). Place the reservoir cap to prevent dirt from entering.

Brake fluid (DOT 4)

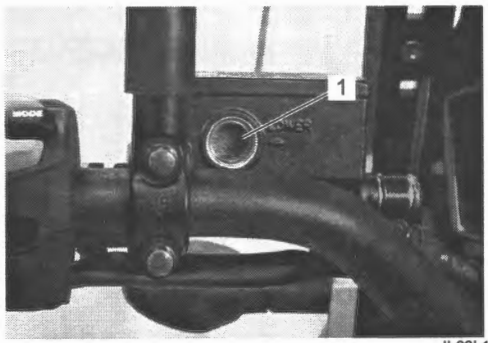

IL06L1530004-01

3) Attach a clear hose to the air bleeder valve, and insert the free end of the hose into a receptacle.
4) Operate the clutch lever several times and, while holding the lever gripped, loosen the air bleeder valve (1) and drain the clutch fluid into a receptacle.

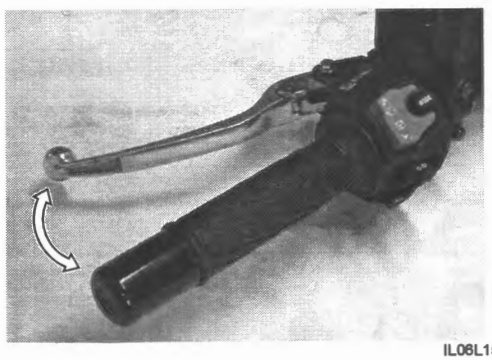

IL06L1530005-02

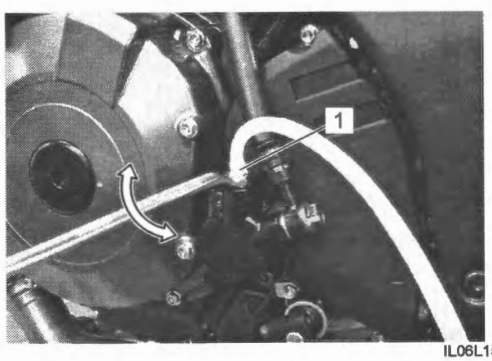

IL06L1530006-01

5) Tighten the air bleeder valve and release the clutch lever slowly.
6) Repeat the steps 4) and 5) until the fluid is flowing out without bubbles.

NOTE

While bleeding the clutch system, replenish the reservoir with the clutch fluid as necessary to keep the fluid above the lower level.

7) Tighten the air bleeder valve to the specified torque.

Tightening torque
Clutch air bleeder valve: 5.4 N·m (0.55 kgf-m, 4.00 lbf-ft)

8) Fill the reservoir with clutch fluid to the upper mark (1) of the reservoir.

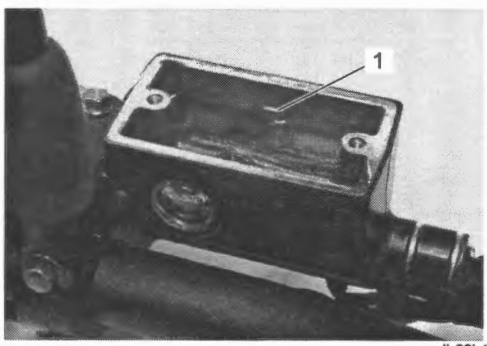

IL06L1530007-02

9) Install the reservoir cap to the master cylinder.
10) Tighten the reservoir cap screws to the specified torque.

Tightening torque
Reservoir cap screw: 1.5 N·m (0.15 kgf-m, 1.10 lbf-ft)

Clutch Fluid Replacement

BENL06L25306005

Refer to "Clutch Fluid Replacement" (Page 5C-6).

Clutch Hose Removal and Installation

BENL06L25306006

For removal and installation procedure, refer to "Clutch Hose" in Section 0B (Page 0B-17). And if necessary, replace the clutch hose with a new one.

Clutch Control System Components

BENL06L25306007

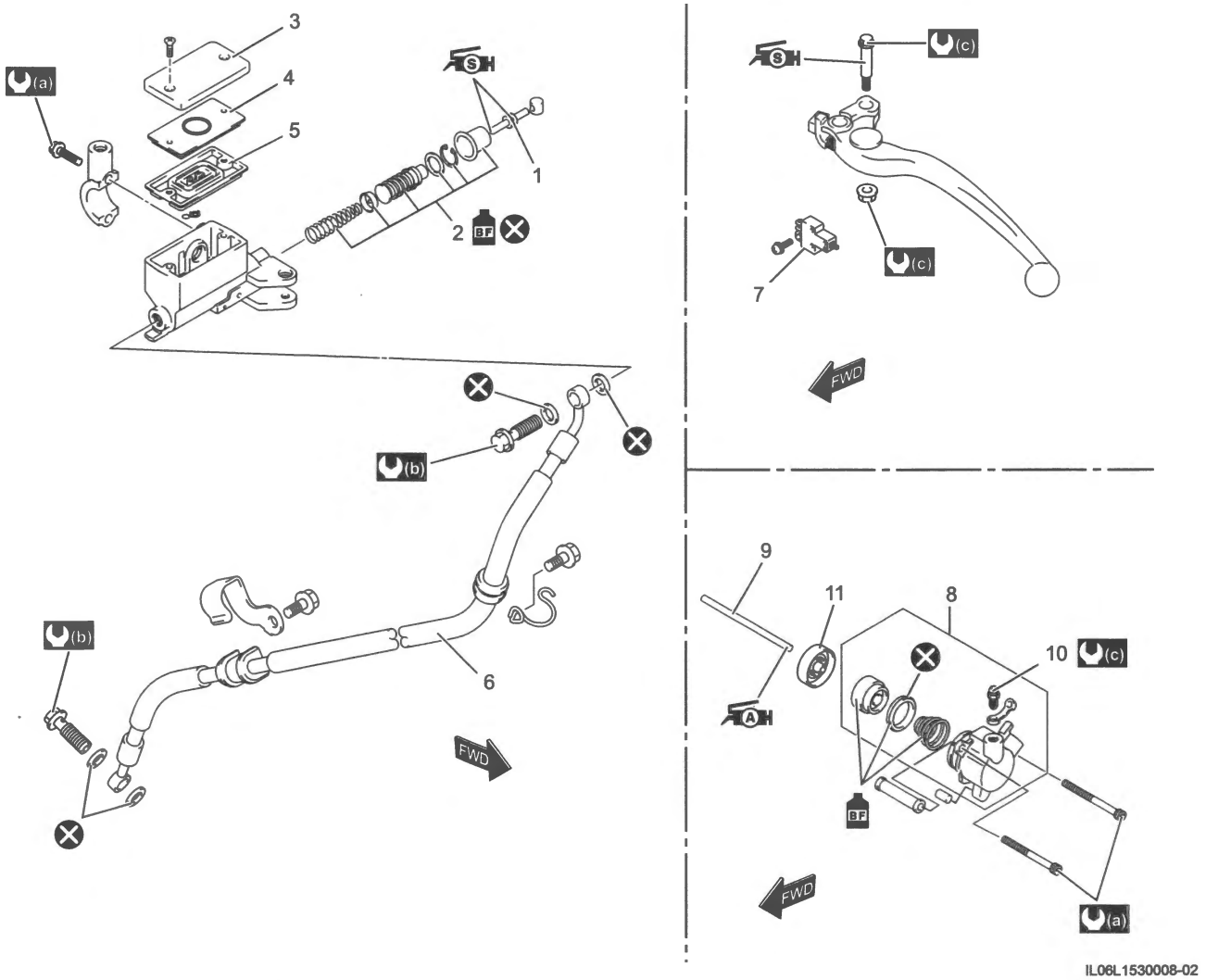

IL06L1530008-02

1. Push rod	8. Clutch release cylinder	(d) : 5.4 N·m (0.55 kgf-m, 4.00 lbf-ft)
2. Piston/cup set	9. Clutch push rod (left)	(e) : 1.5 N·m (0.15 kgf-m, 1.10 lbf-ft)
3. Reservoir cap	10. Clutch air bleeder valve	(f) : 1.2 N·m (0.12 kgf-m, 0.90 lbf-ft)
4. Plate	11. Clutch release cylinder cover	BF : Apply brake fluid.
5. Diaphragm	(a) : 10 N·m (1.0 kgf-m, 7.5 lbf-ft)	AH : Apply grease.
6. Clutch hose	(b) : 23 N·m (2.3 kgf-m, 17.0 lbf-ft)	SH : Apply silicone grease.
7. Clutch lever position switch	(c) : 5.9 N·m (0.60 kgf-m, 4.35 lbf-ft)	: Do not reuse.

Clutch Master Cylinder Assembly Removal and Installation

BENL06L25306008

Removal

1) Drain clutch fluid. ☞(Page 5C-6)
2) Disconnect the clutch lever position switch lead wire connectors (1) from the clutch lever position switch.

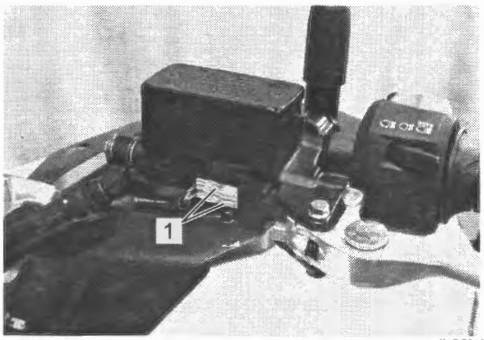

IL06L1530002-02

3) Place a rag underneath the clutch hose union bolt (1) on the master cylinder to catch any spilt clutch fluid.
4) Remove the clutch hose union bolt (1) and disconnect the clutch hose (2) from the clutch master cylinder.

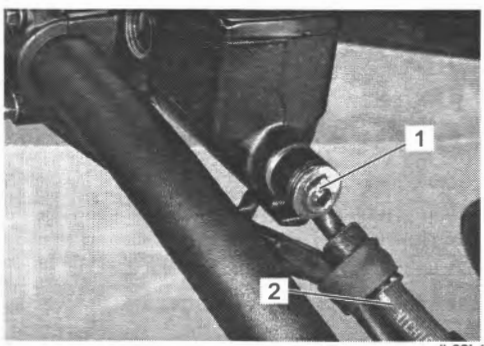

IL06L1530010-02

5) Remove the left rear view mirror (1) from the clutch master cylinder holder.
6) Remove the clutch master cylinder assembly (2) from the handlebar.

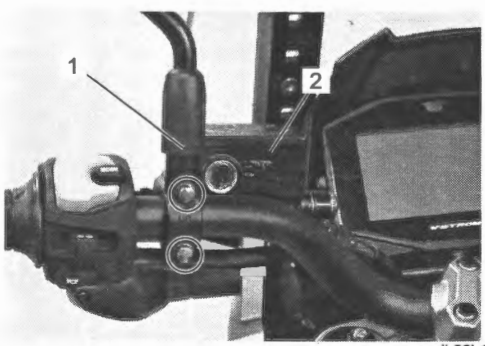

IL06L1530011-01

Installation

Install the clutch master cylinder in the reverse order of removal. Pay attention to the following points:

- When installing the master cylinder onto the handlebars, align the master cylinder's mating surface (1) with the punch mark (2) on the handlebars and tighten the upper mounting bolt (3) first.

NOTE

Face the up mark (4) upward.

Tightening torque
Clutch master cylinder mounting bolt (a): 10 N·m (1.0 kgf-m, 7.5 lbf-ft)

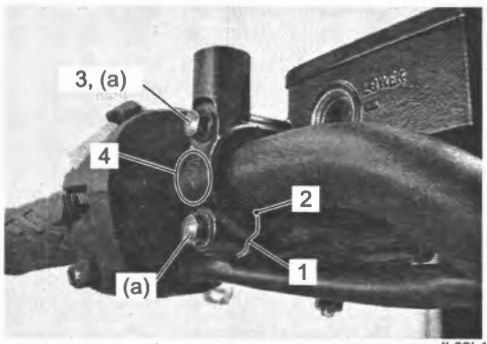

IL06L1530012-01

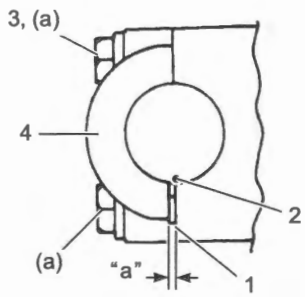

IE31J1530015-02

"a": Clearance

- Install the clutch hose union bolt and new washers to clutch hose. ☞(Page 5C-2)

- After the clutch hose union (1) has contacted the stopper (2) of the master cylinder, tighten the union bolt (3) to the specified torque.

Tightening torque
Clutch hose union bolt (a): 23 N·m (2.3 kgf-m, 17.0 lbf-ft)

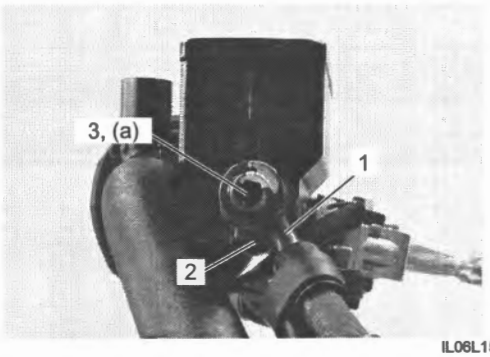

IL06L1530013-01

- Bleed air from the clutch system. ☞(Page 5C-5)

Clutch Master Cylinder / Clutch Lever Disassembly and Reassembly

BENL06L25306009

Refer to "Clutch Master Cylinder Assembly Removal and Installation" (Page 5C-8).

Disassembly

1) Remove the clutch lever position switch (1) from the master cylinder.
2) Remove the lock-nut (2) and clutch lever pivot bolt (3).
3) Remove the clutch lever (4) from the master cylinder.

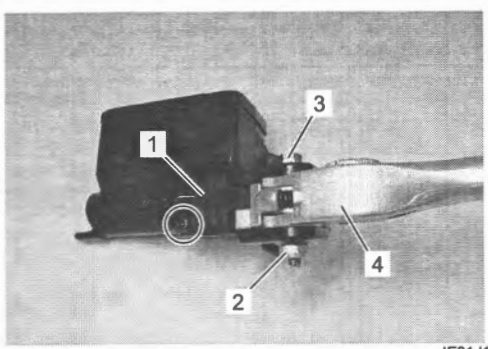

IE31J1530017-01

4) Remove the bushing (1) from the brake lever.

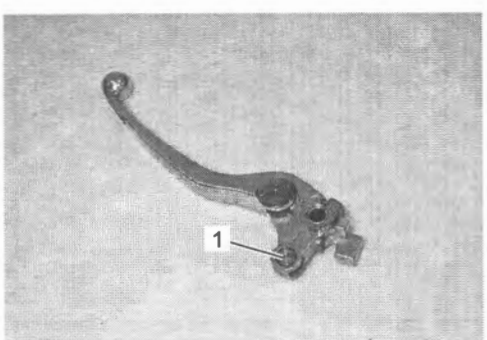

IE31J1530018-01

5) Remove the reservoir cap (1), plate (2) and diaphragm (3) from the master cylinder.

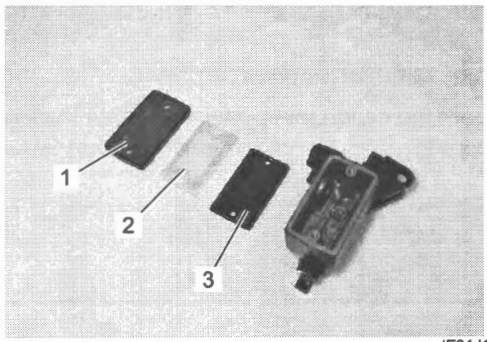

IE31J1530019-01

6) Remove the dust boot (1) and push rod (2) from the master cylinder.
7) Remove the snap ring (3) from the master cylinder with the special tool.

Special tool
09900–06108

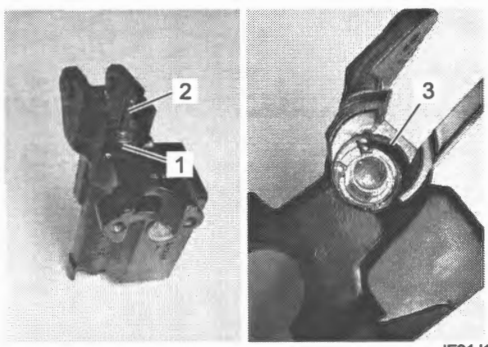

IE31J1530020-03

8) Remove the following parts from the master cylinder.
   - Stop plate (1)
   - Piston (2)
   - Primary cup (3)
   - Spring (4)

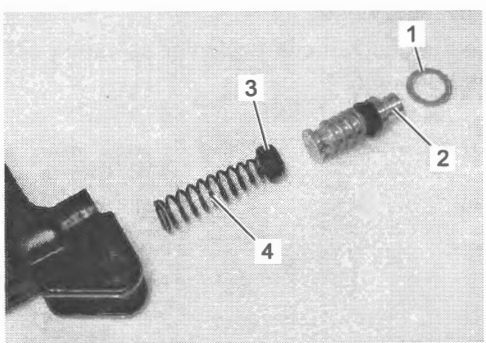

IE31J1530021-01

Reassembly
Assemble the master cylinder in the reverse order of disassembly. Pay attention to the following points:

NOTICE

- **Wash the master cylinder components with new brake fluid before reassembly.**
- **Do not wipe the brake fluid off after washing the components.**
- **When washing the components, use the specified brake fluid. Never use different types of fluid or cleaning solvents such as gasoline, kerosine, etc.**
- **Apply brake fluid to the master cylinder bore and all of the master cylinder component to be inserted into the bore.**

Brake fluid (DOT 4)



I649G1410024-02

- Apply grease to the push rod.

  "A": Grease 99000–25100 (SUZUKI SILICONE GREASE)

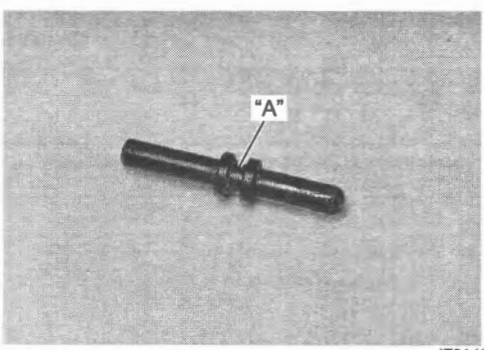

IE31J1530022-01

- Install the dust boot (1) to the push rod (2).
- Apply grease to the push rod end.

  "A": Grease 99000–25100 (SUZUKI SILICONE GREASE)

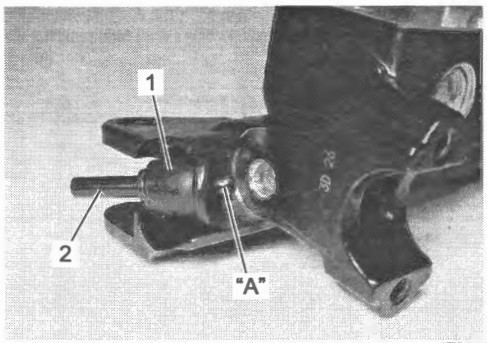

IE31J1530023-01

- When installing the clutch lever position switch, align the projection (1) on the switch with the hole (2) in the master cylinder.

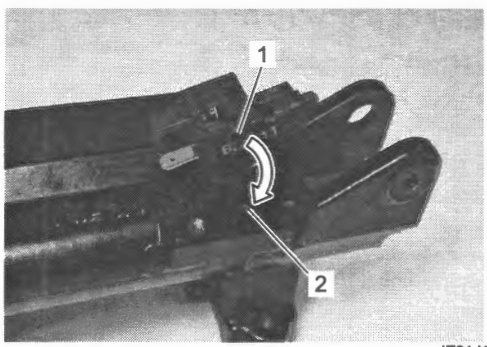

IE31J1530024-01

- Tighten the clutch lever position switch bolt to the specified torque.

  Tightening torque
  Clutch lever position switch bolt: 1.2 N·m (0.12 kgf-m, 0.90 lbf-ft)

- Apply grease to the clutch lever pivot bolt (1).
- Apply grease to the bushing (2).

  "A": Grease 99000–25100 (SUZUKI SILICONE GREASE)

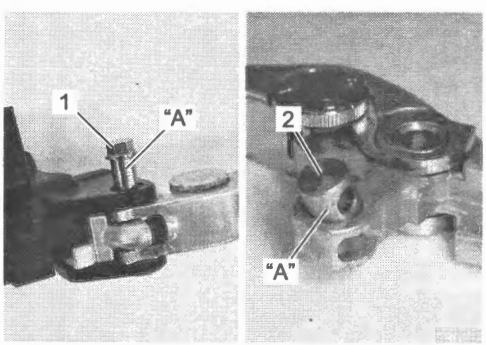

IL06L1530033-01

- Tighten the pivot bolt (1) and lock-nut (2) to the specified torque.

Tightening torque
Clutch lever pivot bolt (a): 5.9 N·m (0.60 kgf-m, 4.35 lbf-ft)
Clutch lever pivot bolt lock-nut (b): 5.9 N·m (0.60 kgf-m, 4.35 lbf-ft)

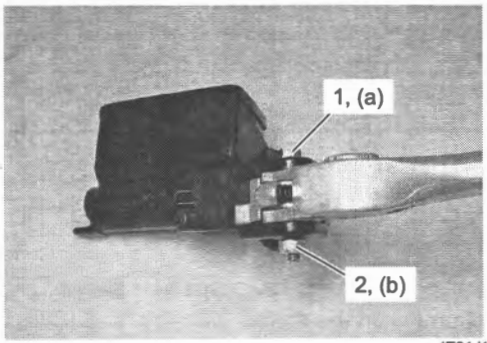

IE31J1530026-01

Clutch Master Cylinder Parts Inspection

BENL06L25306010

Refer to "Clutch Master Cylinder / Clutch Lever Disassembly and Reassembly" (Page 5C-9).

Master Cylinder

Inspect the master cylinder bore (1) for any scratches or other damage. If any damage is found, replace the master cylinder with a new one.

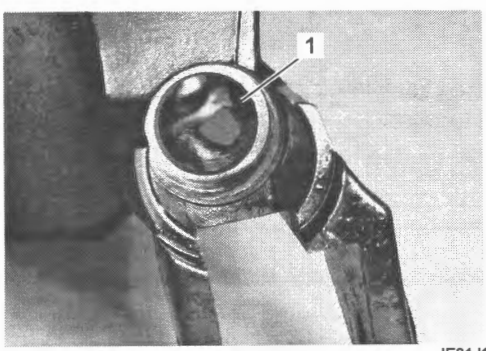

IE31J1530027-02

Piston

Inspect the piston surface for any scratches or other damage. If any damage is found, replace it with a new one.

Rubber Parts

Inspect the primary cup (1), secondary cup (2) and dust boot (3) for wear or damage. If any damage is found, replace them with new ones.

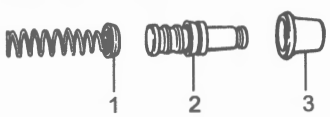

IE31J1410048-01

Clutch Release Cylinder / Clutch Push Rod (Left) Removal and Installation

BENL06L25306011

Removal

1) Drain clutch fluid. ☞(Page 5C-6)
2) Remove the clutch hose union bolt (1) and disconnect the clutch hose (2) from the clutch release cylinder (3).
3) Remove the clutch release cylinder (3) and release cylinder spacer (4) from the generator cover.

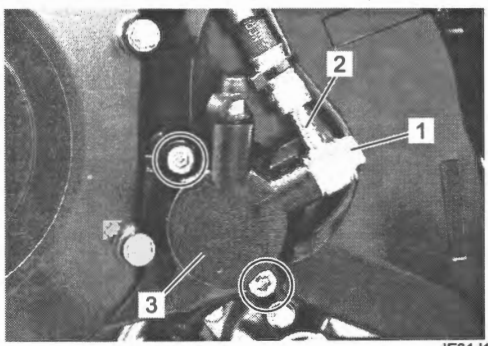

IE31J1530028-01



IE31J1530029-01

4) Remove the clutch push rod (left) (1) from the left crankcase.

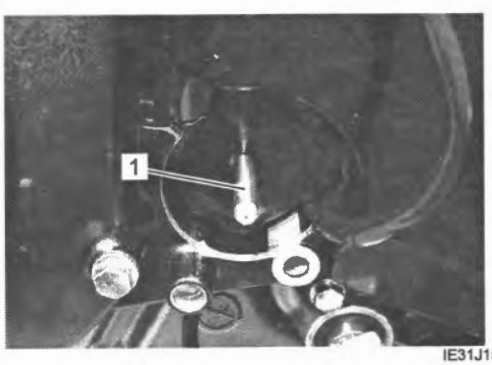

IE31J1530030-01

Installation

Install the clutch release cylinder/clutch push rod (left) in the reverse order of removal. Pay attention to the following points:

- Apply a small quantity of grease to the clutch push rod end.

  "A": Grease 99000–25011 (SUZUKI SUPER GREASE A)

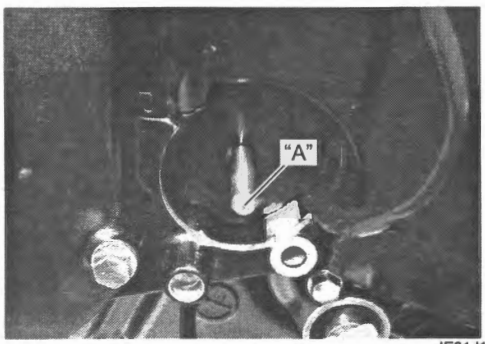

IE31J1530031-01

- Install the clutch release cylinder (1) and the clutch release cylinder cover (2) to the clutch push rod (3).

NOTICE

Do not cut the clutch release cylinder cover by edge (4) of generator cover.

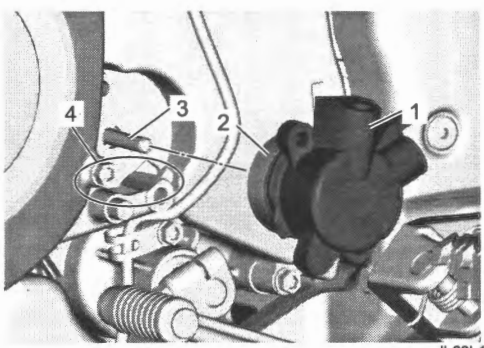

IL06L1530036-02

- Tighten the clutch release cylinder mounting bolts (1) to the specified torque.

  Tightening torque
  Clutch release cylinder mounting bolt (a): 10 N·m (1.0 kgf-m, 7.5 lbf-ft)

- Install the clutch hose union bolt (2) and new washers (3) to clutch hose.
- After the clutch hose union (4) has contacted the stopper (5) of clutch release cylinder, tighten the union bolt (2) to the specified torque.

  Tightening torque
  Clutch hose union bolt (b): 23 N·m (2.3 kgf-m, 17.0 lbf-ft)

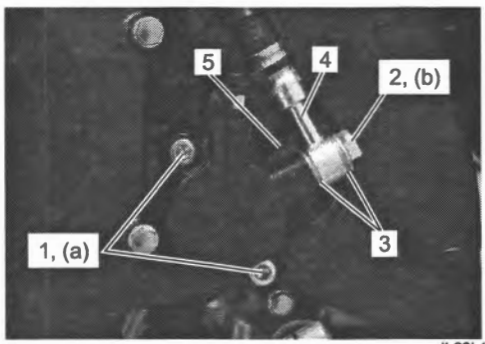

IL06L1530030-01

- Bleed air from the clutch system. ☞(Page 5C-5)

Clutch Push Rod (Left) Inspection

BENL06L25306012

Refer to "Clutch Release Cylinder / Clutch Push Rod (Left) Removal and Installation" (Page 5C-11).
Inspect the clutch push rod (left) for wear or bend. If any defects are found, replace it with a new one.

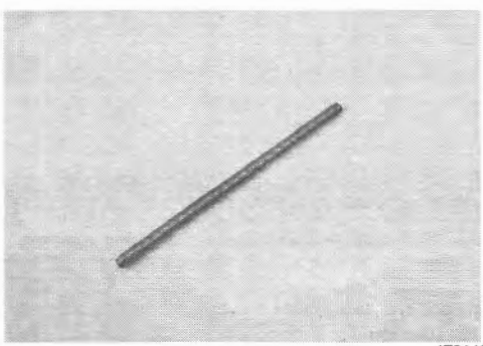

IE31J1530032-01

Clutch Release Cylinder Disassembly and Reassembly

BENL06L25306013

Refer to "Clutch Release Cylinder / Clutch Push Rod (Left) Removal and Installation" (Page 5C-11).

Disassembly

1) Place a rag over the piston to prevent popping out and then force out the piston applying compressed air gradually from the hole for the clutch hose.

NOTICE

Do not use high pressure air to prevent piston damage.

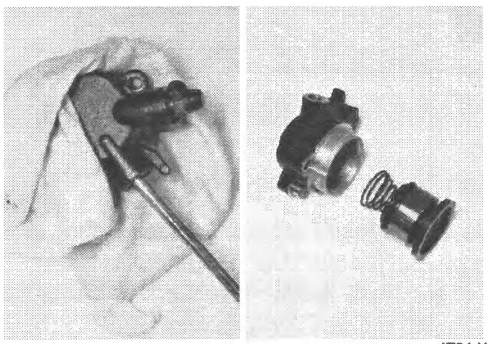

IE31J1530033-01

Reassembly

Assemble the clutch release cylinder in the reverse order of disassembly. Pay attention to the following points:

- When installing the clutch release cylinder cover (1) to the clutch release cylinder (2), align the projection (3) on the clutch release cylinder and groove (4) into the clutch release cylinder cover.

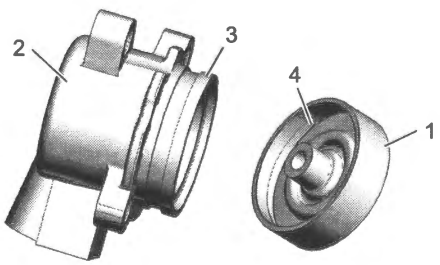

IL06L1530037-01

- Wash the cylinder bore and piston with specified brake fluid.

Brake fluid (DOT 4)

NOTICE

- **Wash the clutch release cylinder components with new brake fluid before reassembly.**
- **Do not wipe the brake fluid off after washing the components.**
- **When washing the components, use the specified brake fluid. Never use different types of fluid or cleaning solvents such as gasoline, kerosine, etc.**
- **Apply brake fluid to the clutch release cylinder bore and all of the clutch release cylinder component to be inserted into the bore.**

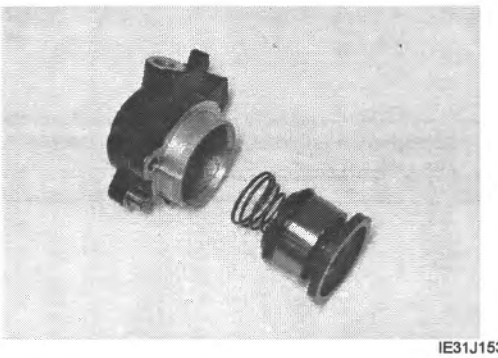

IE31J1530034-01

Clutch Release Cylinder Inspection

BENL06L25306014

Refer to "Clutch Release Cylinder Disassembly and Reassembly" (Page 5C-13).

Inspect the clutch release cylinder bore wall for nicks, scratches or other damage. If any damage is found, replace it with a new one.

Inspect the piston surface for any scratches or other damage. If any damage is found, replace it with a new one.

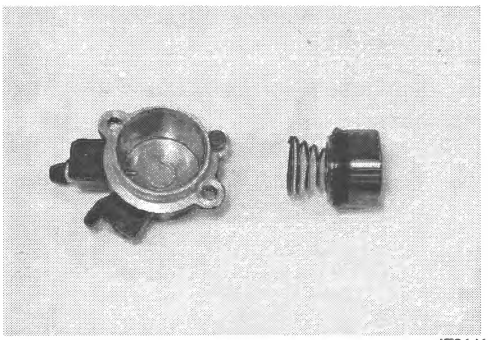

IE31J1530035-01

Clutch Components

BENL06L25306015

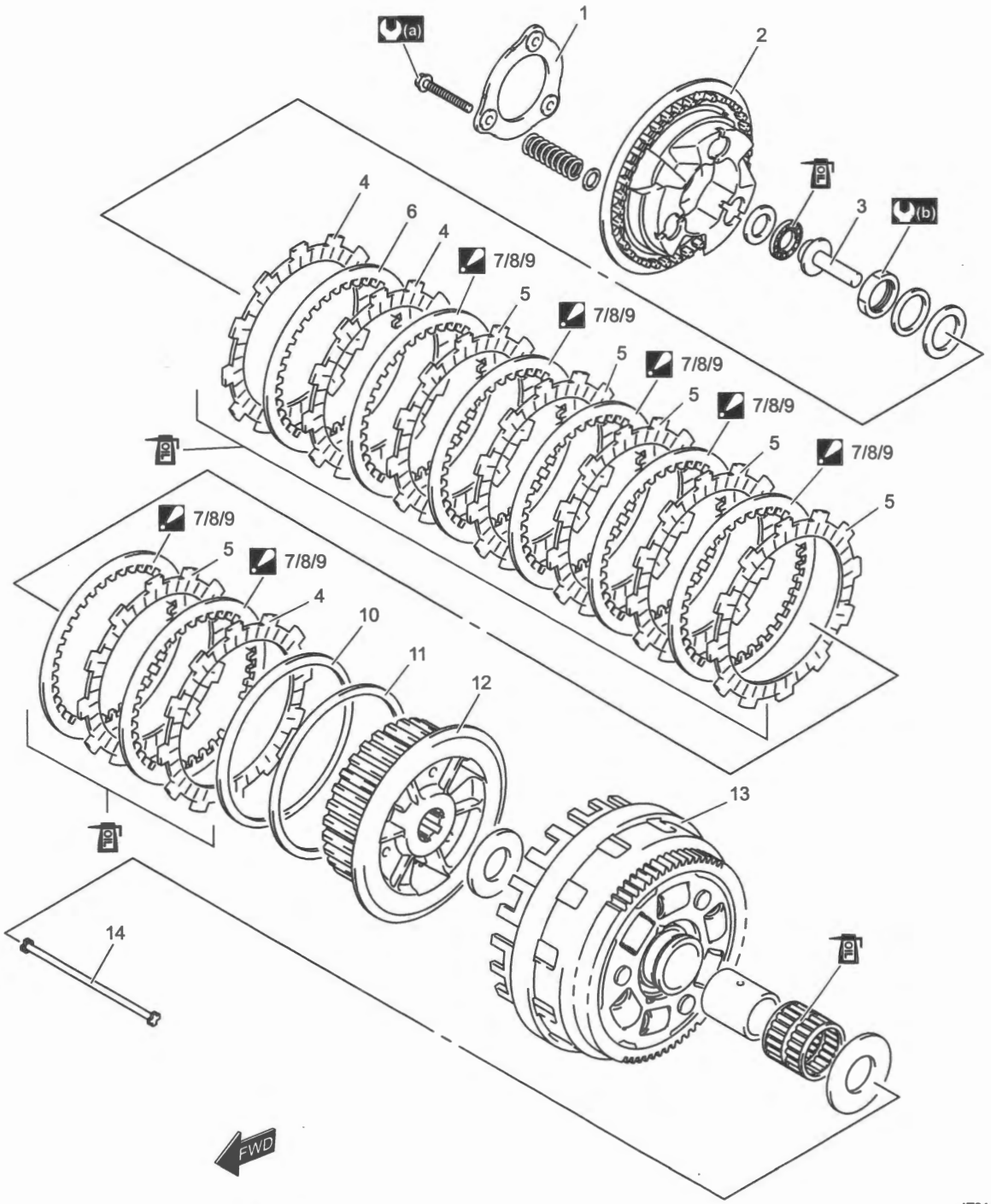

IE31J1530113-02

1. Stopper plate	7. Driven plate No. 1 (7 – 5 pcs.) : The driven plates No. 1, No. 3 and No. 4 are 7 pcs. in total.	13. Primary driven gear assembly
2. Clutch pressure plate	8. Driven plate No. 3 (0 – 2 pcs.) : The driven plates No. 1, No. 3 and No. 4 are 7 pcs. in total.	14. Clutch push rod (right)
3. Clutch push piece	9. Driven plate No. 4 (0 – 2 pcs.) : The driven plates No. 1, No. 3 and No. 4 are 7 pcs. in total.	(a) : 10 N·m (1.0 kgf-m, 7.5 lbf-ft)
4. Drive plate No. 2	10. Spring washer	(b) : 150 N·m (15.3 kgf-m, 111.0 lbf-ft)
5. Drive plate No. 1	11. Spring washer seat	: Apply engine oil.
6. Driven plate No. 2	12. Clutch sleeve hub	

Clutch Removal

BENL06L25306016

1) Remove the following parts. (If equipped)
   - Accessory bar: ☞(Page 9E-7)
2) Drain engine oil. ☞(Page 1E-4)
3) Drain engine coolant. ☞(Page 1F-7)
4) Remove the rear brake light switch spring (1) and front footrest bracket (RH) (2) from the frame.

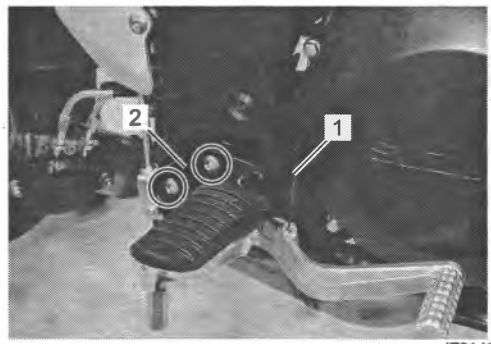

IE31J1530046-01

5) Disconnect the radiator outlet hose (1), water bypass hose (2), PCV hose (3), oil cooler inlet hose (4) and oil cooler outlet hose (5) from the water pump.

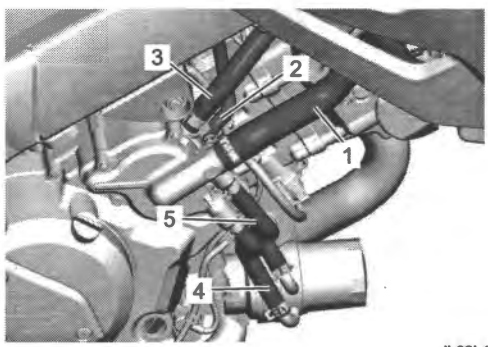

IL06L1530031-02

6) Remove the clutch cover (1) and clamp (2) from the right crankcase.

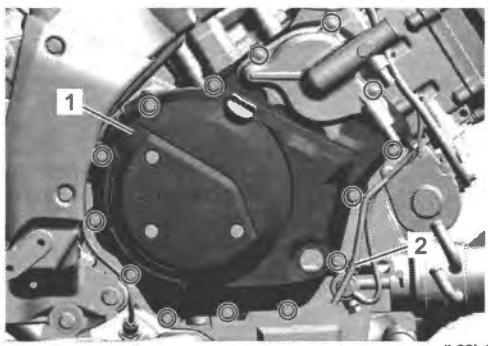

IL06L1530034-01

7) Remove the gasket (1) and dowel pins (2) from the right crankcase.

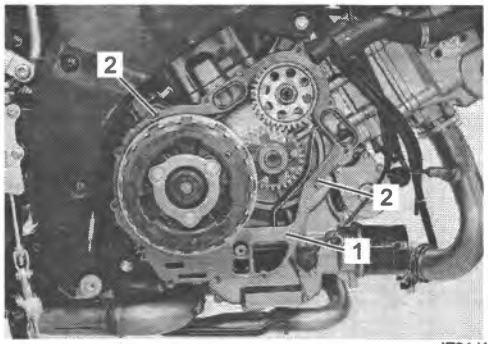

IE31J1530049-01

8) Remove the clutch spring set bolts (1), stopper plate (2) and clutch springs from the clutch sleeve hub.

NOTE

Loosen the clutch spring set bolts little by little.

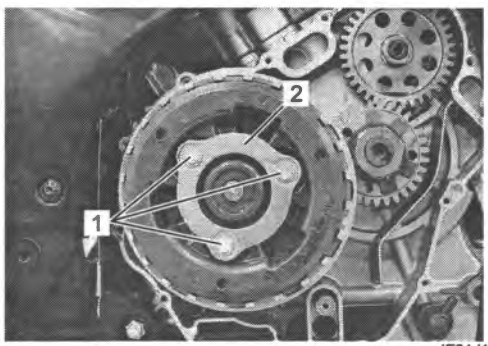

IE31J1530050-01

9) Remove the clutch pressure plate (1) with the clutch drive plates (No. 2) (2) and clutch driven plate (No. 2) (3) from the primary driven gear assembly.

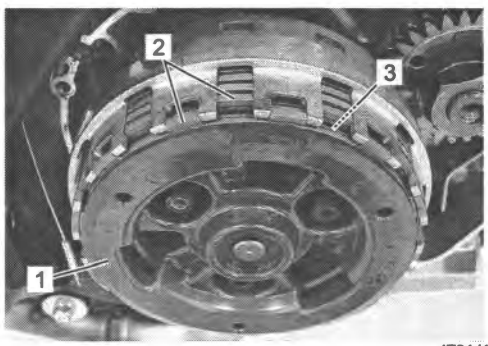

IE31J1530051-01

10) Remove the clutch drive plates (No. 2) (1) and clutch driven plate (No. 2) (2) from the clutch pressure plate.

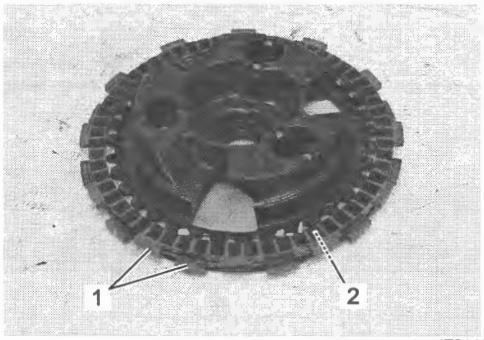

IE31J1530052-02

11) Remove the clutch driven plates (1) and drive plates (2) from the clutch sleeve hub.

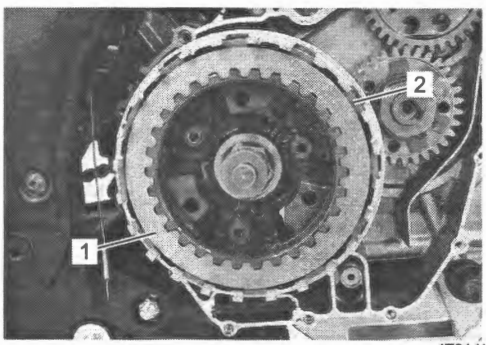

IE31J1530053-01

12) Remove the spring washer (1) and spring washer seat (2) from the primary driven gear assembly.

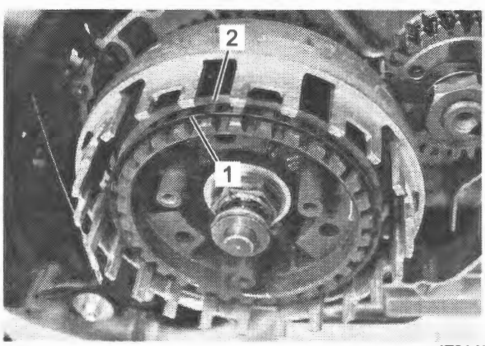

IE31J1530054-01

13) Remove the thrust washer (1), release bearing (2) and clutch push piece (3) from the countershaft.

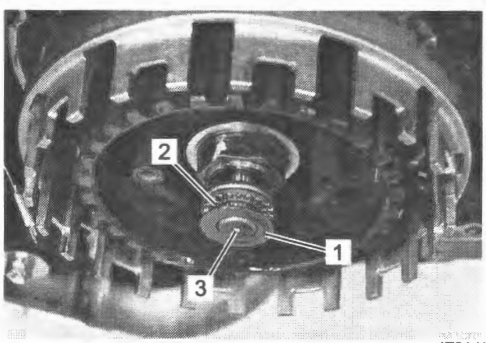

IE31J1530055-01

14) Remove the clutch push rod (right) (1) from the countershaft.

NOTE

If it is difficult to pull out the push rod (right) (1), use a magnetic hand or a wire.

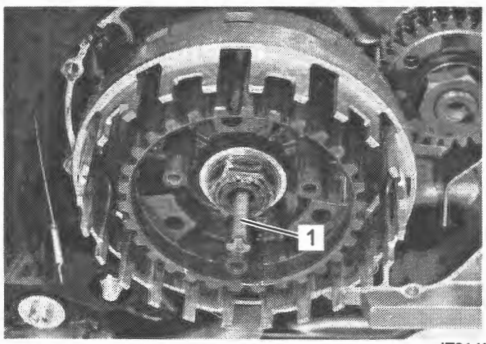

IE31J1530056-01

15) Unlock the clutch sleeve hub nut.

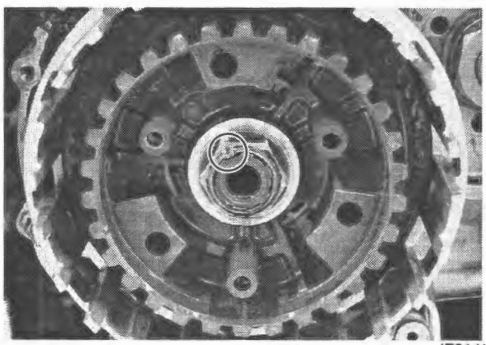

IE31J1530057-01

16) Hold the clutch sleeve hub with the special tools and remove the clutch sleeve hub nut (1) from the countershaft.

Special tool
(A): 09920–53740
(B): 09920–31020

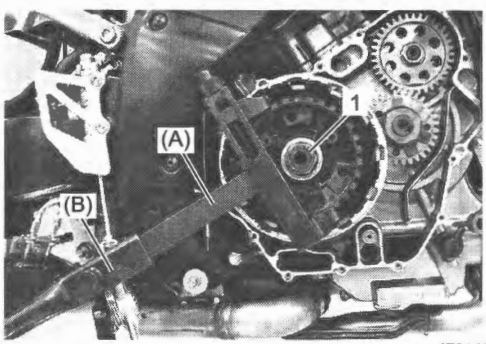

IE31J1530058-02

17) Remove the conical spring washer (1), washer (2) and clutch sleeve hub (3) from the countershaft.

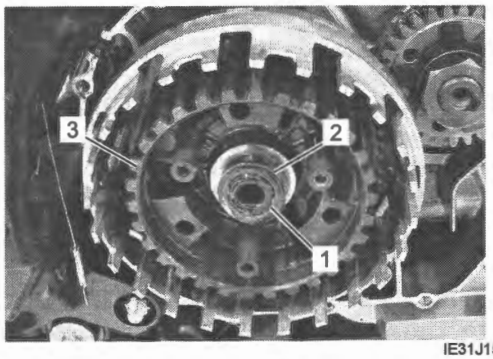

IE31J1530059-01

18) Remove the thrust washer (1) and primary driven gear assembly (2) from the countershaft.

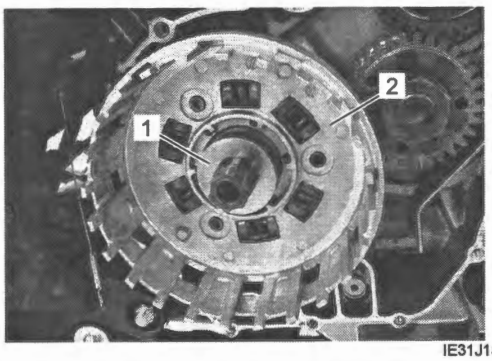

IE31J1530060-01

19) Remove the spacer (1), bearing (2) and thrust washer (3) from the countershaft.

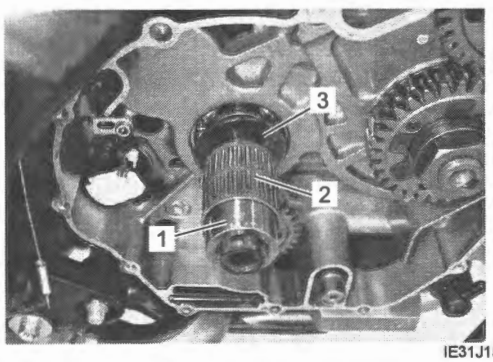

IE31J1530061-01

20) Remove the snap ring (1), oil pump drive gear (2) and pin (3) from the primary driven gear assembly.

Special tool
09900–06107

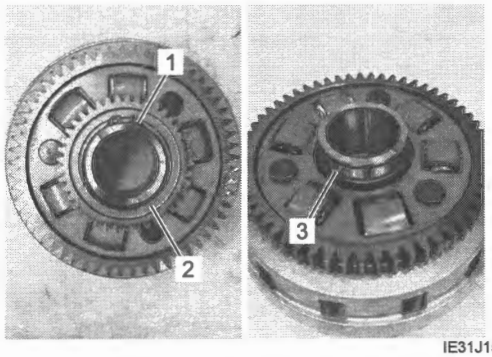

IE31J1530062-01

Clutch Installation

BENL06L25306017

1) Install the pin (1).
2) Install the oil pump drive gear (2) with the flange side (3) facing the primary driven gear assembly.

NOTE

When installing the oil pump drive gear (2), align the pin (1) with the slot (4).

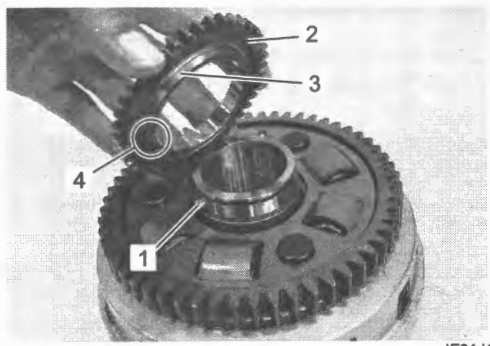

IE31J1530063-01

3) Install the new snap ring (1) to the primary driven gear assembly.

Special tool
09900–06107



IE31J1530064-01

4) Install the thrust washer (1) to the countershaft.

NOTE

The tapered portion (2) of thrust washer (1) faces the crankcase side.

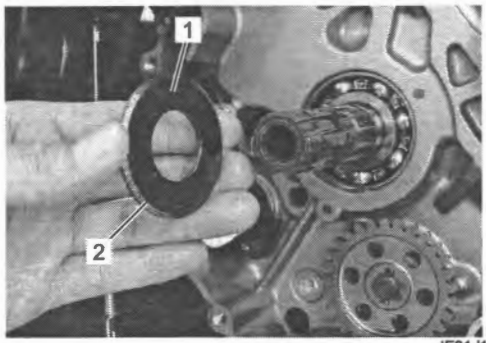

IE31J1530065-01

5) Install the spacer (1) to the countershaft.
6) Apply engine oil to the bearing (2) and install it.

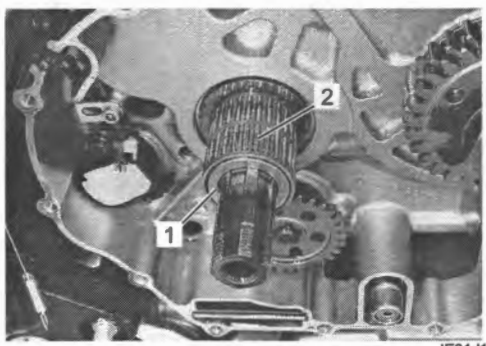

IE31J1530066-01

7) Insert a suitable bar (1) into the holes of primary drive gears (2) and align the teeth of scissors gears.
8) Install the primary driven gear assembly (3) onto the countershaft.

NOTE

Be sure to engage the oil pump driven gear (4) and oil pump drive gear (5), primary drive gears (2) and primary driven gear (6).

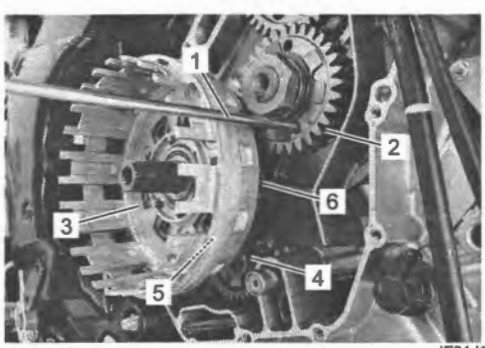

IE31J1530067-01

9) Install the thrust washer (1) to the countershaft.

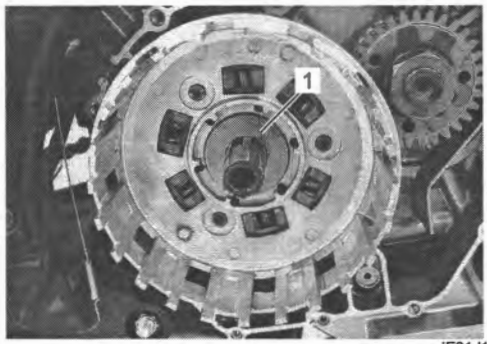

IE31J1530068-01

10) Install the clutch sleeve hub (1), washer (2) and conical spring washer (3) to the countershaft.

NOTE

The conical curve side of spring washer (3) faces outside.

11) Install the new clutch sleeve hub nut (4).

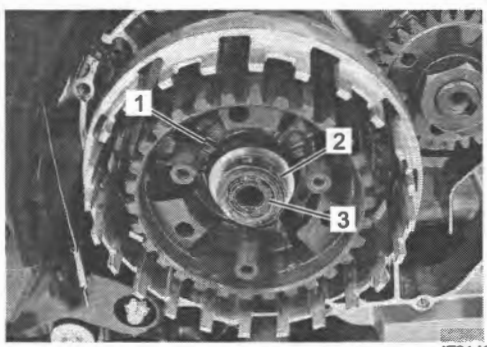

IE31J1530069-01

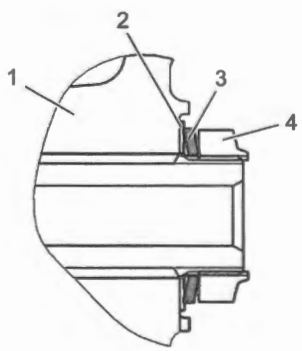

IE31J1530070-02

12) Hold the clutch sleeve hub with the special tools and tighten the clutch sleeve hub nut (1) to the specified torque.

Special tool
(A): 09920–53740
(B): 09920–31020

Tightening torque
Clutch sleeve hub nut (a): 150 N·m (15.3 kgf-m, 111.0 lbf-ft)

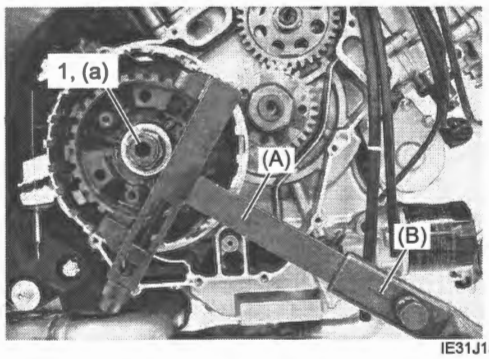

IE31J1530071-01

13) Lock the clutch sleeve hub nut (1) with a center punch.

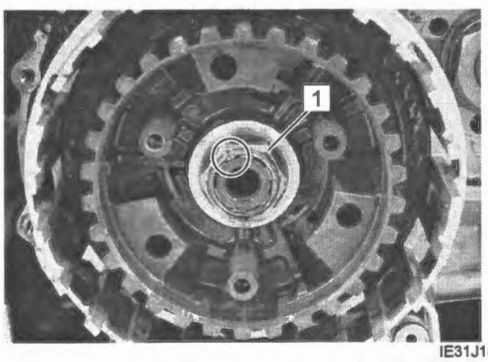

IE31J1530072-01

14) Install the clutch push rod (right) (1) into the countershaft.

15) Install the clutch push piece (2), release bearing (3) and thrust washer (4) to the countershaft.

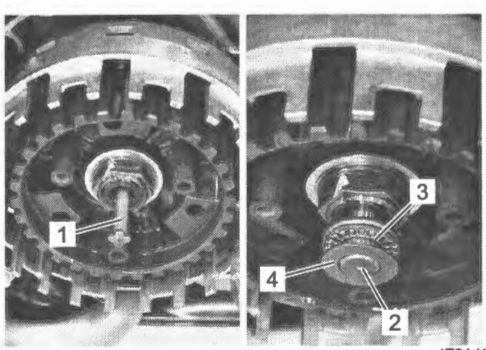

IE31J1530073-02

16) Install the spring washer seat (1) and spring washer (2) onto the clutch sleeve hub.

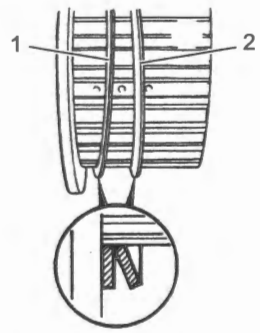

IE31J1530074-01

17) Apply engine oil to the clutch drive plates and driven plates.

18) Insert the clutch drive plates and driven plates one by one into the clutch sleeve hub (1) and clutch pressure plate (2) in the prescribed order.

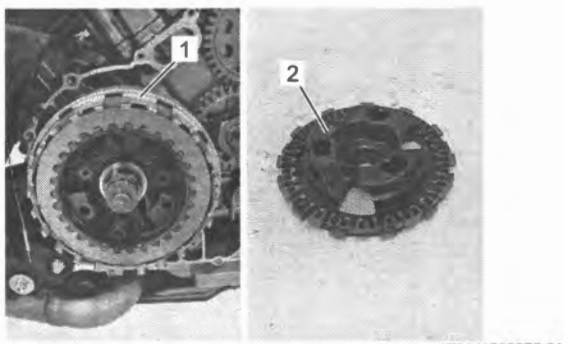

IE31J1530075-01

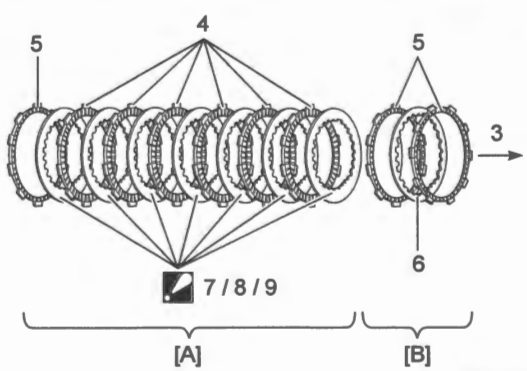

IE31J1530076-02

[A]: Insert the plates to the clutch sleeve hub.	6. Driven plate No. 2
[B]: Insert the plates to the clutch pressure plate.	7. Driven plate No. 1 (7 – 5 pcs.) : The driven plates No. 1, No. 3 and No. 4 are 7 pcs. in total.
3. Direction of outside (Clutch pressure plate side)	8. Driven plate No. 3 (0 – 2 pcs.) : The driven plates No. 1, No. 3 and No. 4 are 7 pcs. in total.
4. Drive plate No. 1	9. Driven plate No. 4 (0 – 2 pcs.) : The driven plates No. 1, No. 3 and No. 4 are 7 pcs. in total.
5. Drive plate No. 2	

NOTE

Two kinds of the drive plate (No. 1 and No. 2) are equipped in the clutch system, they can be distinguished by the inside diameter "a".

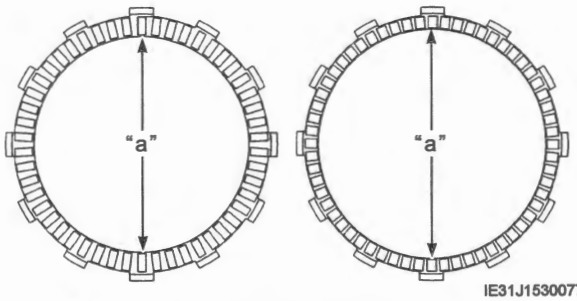

IE31J1530077-01

Drive plate	I.D. "a"
No. 1	127 mm (5.0 in)
No. 2	135 mm (5.3 in)

NOTE

Four kinds of the driven plate (No. 1, No. 2, No. 3 and No. 4) are equipped in the clutch system, they can be distinguished by the inside diameter "a" and thickness "b".
The No. 1, No. 2, No. 3 and No. 4 driven plates are 8 pcs. in total.
5 – 7 pcs. of No. 1 driven plates are used with 1 pc. of No. 2, 2 – 0 pc(-s). of No. 3 driven plate(-s) and 2 – 0 pc(-s). of No. 4 driven plate(-s) as a set.

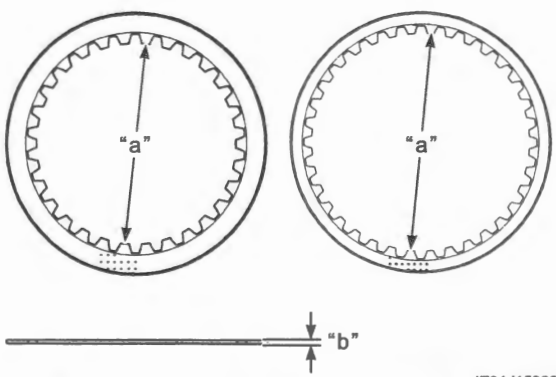

IE31J1530078-01

Driven plate	I.D. "a"	Thickness "b"
No. 1	115.5 mm (4.55 in)	2.0 mm (0.08 in)
No. 2	126.0 mm (4.96 in)	2.0 mm (0.08 in)
No. 3	115.5 mm (4.55 in)	1.6 mm (0.06 in)
No. 4	115.5 mm (4.55 in)	2.3 mm (0.09 in)

19) Install the clutch pressure plate (1) with the plates.

NOTE

Insert the outermost drive plate (No. 2) claws (2) to the other slits (3) of clutch housing as shown.

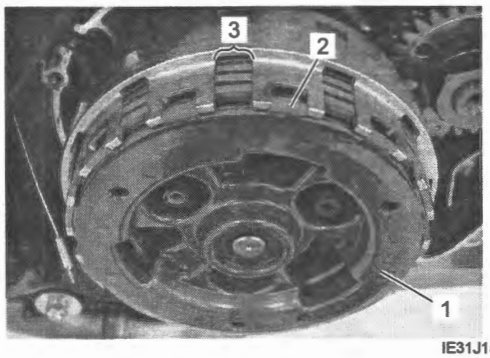

IE31J1530079-01

20) Install the clutch springs, stopper plate (1) and clutch spring set bolts (2).
21) Tighten the clutch spring set bolts (2) to the specified torque.

NOTE

Tighten the clutch spring set bolts little by little.

Tightening torque
Clutch spring set bolt (a): 10 N·m (1.0 kgf-m, 7.5 lbf-ft)

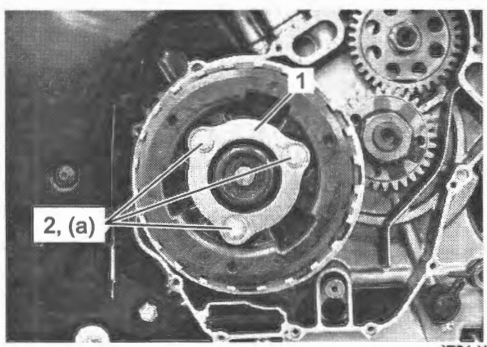

IE31J1530080-01

22) Install the new gasket (1) and the dowel pins (2).

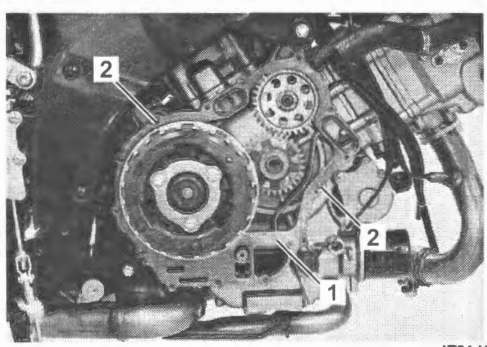

IE31J1530081-02

23) Install the clutch cover with the slot on the impeller shaft end (1) securely engaged with the groove (2) on the cam drive idle gear shaft.

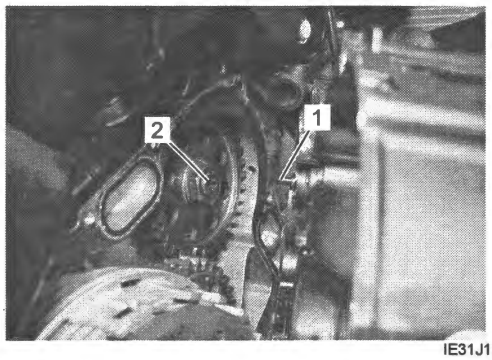

IE31J1530082-01

24) Tighten the clutch cover bolts to the specified torque.

Tightening torque
Clutch cover bolt (a): 10 N·m (1.0 kgf-m, 7.5 lbf-ft)

NOTE

Fit the clamp to the bolt (1).

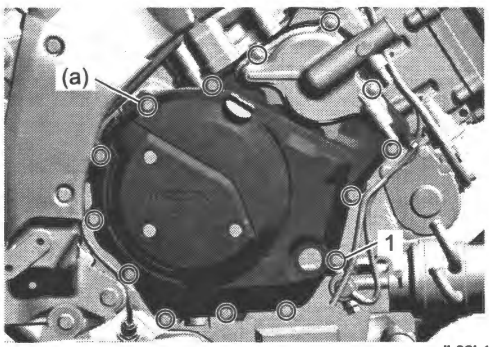

IL06L1530035-01

25) Connect the PCV hose (1) to water pump. ☞(Page 1D-3)

26) Connect the water bypass hose (2), radiator outlet hose (3), oil cooler inlet hose (4) and oil cooler outlet hose (5) to water pump. ☞(Page 1F-3)

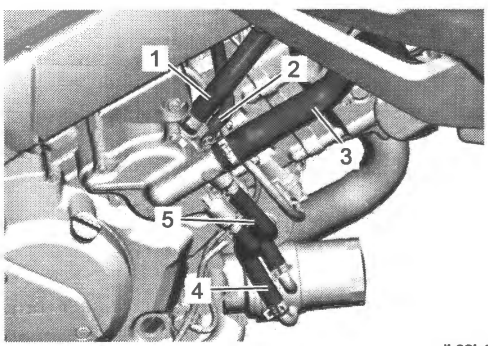

IL06L1530032-02

27) Pour engine oil. ☞(Page 1E-4)

28) Pour engine coolant. ☞(Page 1F-7)

29) Install the front footrest bracket (RH) (1) and tighten the front footrest bracket bolts (2) to the specified torque.

"A": Thread lock cement 99000–32150 (THREAD LOCK CEMENT 1322D)

Tightening torque
Front footrest bracket bolt (a): 26 N·m (2.7 kgf-m, 19.5 lbf-ft)

30) Install rear brake light switch spring (3) to brake pedal.

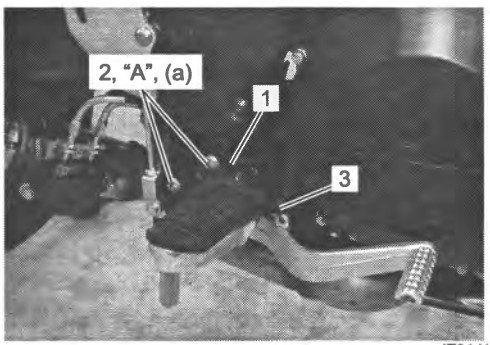

IE31J1530085-02

31) Adjust rear brake light switch. ☞(Page 4A-10)

32) Install the following parts. (If equipped)

- Accessory bar: ☞(Page 9E-7)

Clutch Parts Inspection

BENL06L25306018

Refer to "Clutch Removal" (Page 5C-15) and "Clutch Installation" (Page 5C-17).

Clutch Drive / Driven Plate

NOTE

Wipe off the engine oil from the drive and driven plates with a clean rag.

Measure the thickness of drive plates with a vernier calipers. If the drive plate thickness is found to have reached the limit, replace it with a new one.

Special tool
(A): 09900–20102

Clutch drive plate thickness
[Limit (No.1 and No.2)]: 3.42 mm (0.135 in)

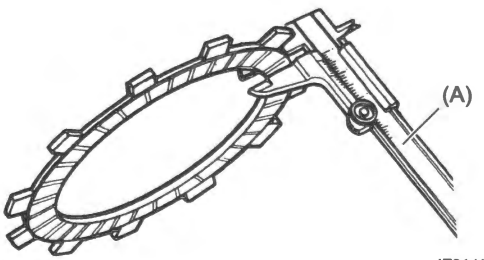

IE31J1530086-01

Measure the claw width of drive plates with a vernier calipers. Replace the drive plates found to have worn down to the limit.

Special tool
(A): 09900–20102

Clutch drive plate claw width
[Limit (No.1 and No.2)]: 13.10 mm (0.516 in)

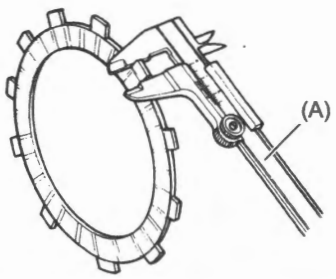

IE31J1530087-01

Measure each driven plate for distortion with a thickness gauge and surface plate.
Replace driven plates which exceed the limit.

Special tool
(A): 09900–20803

Clutch driven plate distortion
[Limit]: 0.10 mm (0.004 in)

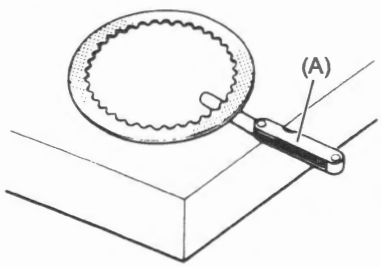

IE31J1530088-01

Clutch Spring
Measure the free length of each coil spring with a vernier calipers, and compare the length with the specified limit. Replace all the springs if any spring is not within the limit.

Special tool
(A): 09900–20102

Clutch spring free length
[Limit]: 43.5 mm (1.71 in)

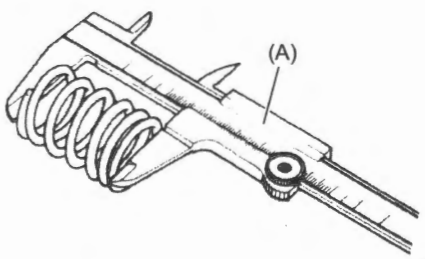

IE31J1530089-01

Clutch Release Bearing
Inspect the clutch release bearing (1) for any abnormality, especially cracks. When removing the bearing from the clutch, decide whether it can be reused or if it should be replaced.
Smooth engagement and disengagement of the clutch depends on the condition of this bearing.

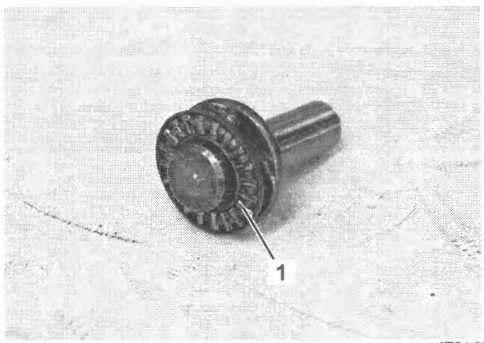

IE31J1530090-01

Push Rod (Right)
Inspect the push rod for bend and damage.
If any defects are found, replace the push rod with a new one.

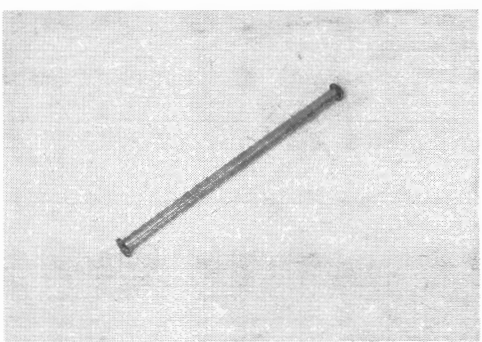

IE31J1530091-01

Clutch Sleeve Hub / Primary Driven Gear Assembly
Inspect the slot of the clutch pressure plate (1), clutch sleeve hub (2) and primary driven gear assembly (3) for damage or wear caused by the clutch plates. If necessary, replace it with a new one.
Inspect the cam faces on clutch pressure plate (1) and clutch sleeve hub (2) for wear and damage. If necessary, replace it with a new one. Inspect the springs of primary driven gear assembly (3) for any damages. If necessary, replace primary driven gear assembly with a new one.

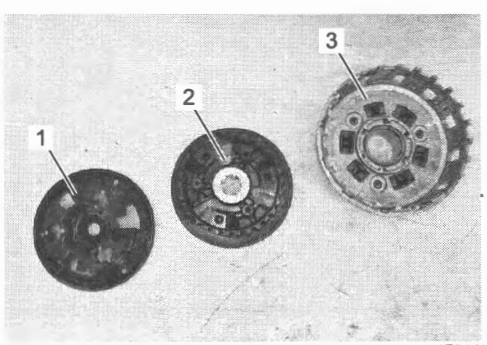

IE31J1530092-01

Primary Drive Gear Removal and Installation

BENL06L25306019

Refer to "Clutch Removal" (Page 5C-15), "Clutch Installation" (Page 5C-17) and "Spark Plug Removal and Installation" in Section 1H (Page 1H-6).

Removal

1) Turn the crankshaft until two punch marks (1) are aligned.

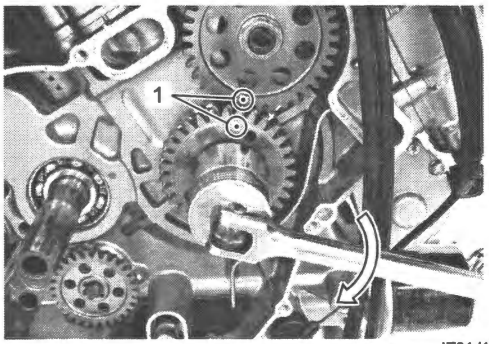

IE31J1530093-04

2) Hold the cam drive idle gear/sprocket No. 1 with the special tool and remove the primary drive gear nut (1).

Special tool
(A): 09930–40113

NOTE

The primary drive gear nut (1) has left-hand threads.

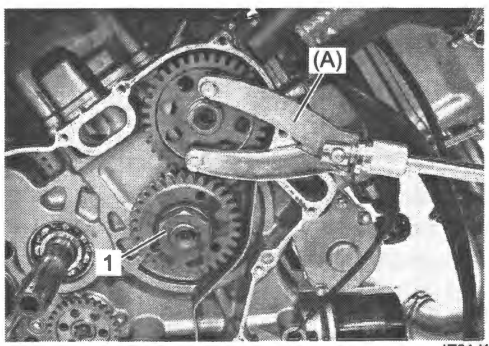

IE31J1530094-01

3) Remove the conical spring washer (1) and primary drive gear (2).
4) Remove the key (3) and thrust washer (4).

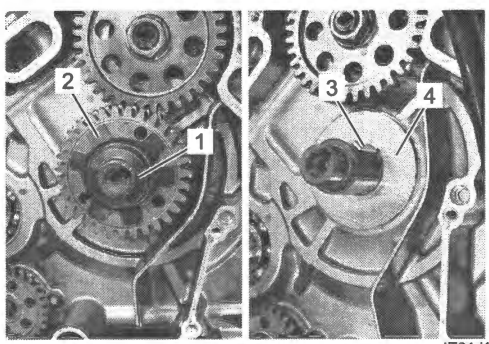

IE31J1530095-01

Installation

1) Install the thrust washer (1) and key (2).

NOTE

The chamfer side (3) of the thrust washer (1) faces the crankcase side.

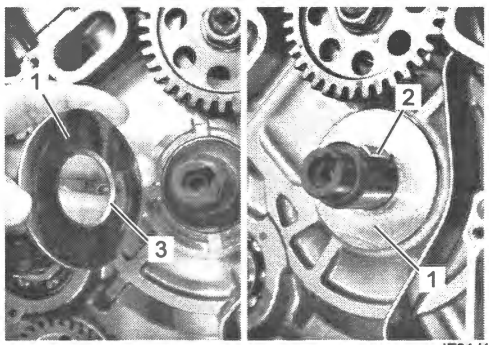

IE31J1530096-01

2) Install the primary drive gear (1).

NOTE

Align the punch marks (2) on the primary drive gear and cam drive idle gear/sprocket No. 1 (3).

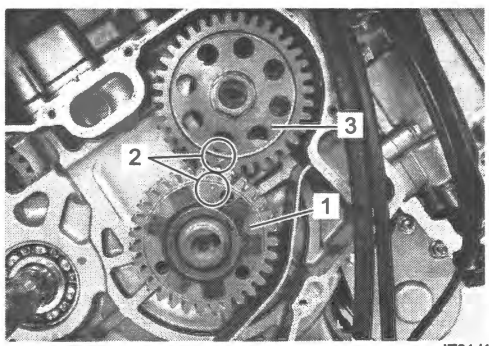

IE31J1530097-01

3) Apply engine oil to the threads of nut and conical spring washer.
4) Install the conical spring washer (1).

NOTE

The conical curve side of spring washer (1) faces outside.

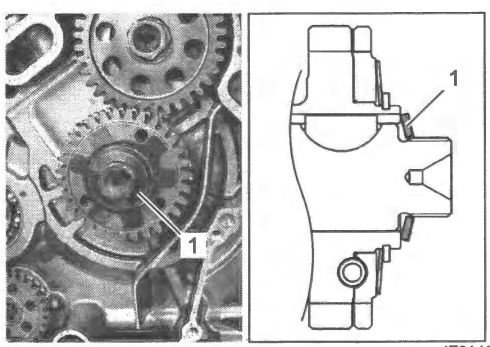

IE31J1530098-01

5) Install the primary drive gear nut (1).

NOTE

- **The primary drive gear nut (1) has left-hand threads.**
- **The "L" mark (2) on the nut (1) faces outside.**

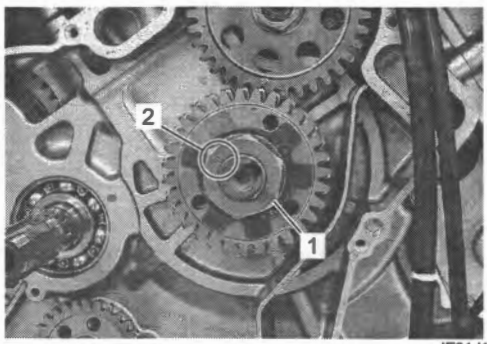

IE31J1530099-02

6) Hold the cam drive idle gear/sprocket No. 1 with the special tool and tighten the primary drive gear nut (1) to the specified torque.

Special tool
(A): 09930–40113

Tightening torque
Primary drive gear nut (a): 160 N·m (16.3 kgf-m, 118.0 lbf-ft)

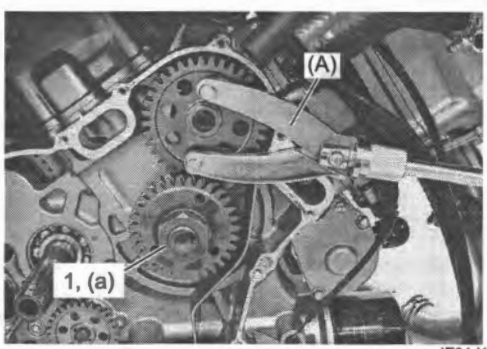

IE31J1530100-01

Primary Drive Gear Inspection

BENL06L25306020

Refer to "Primary Drive Gear Removal and Installation" (Page 5C-23).
Visually inspect the gear teeth for wear and damage. If they are worn, replace the gear with a new one. ☞(Page 5C-25)

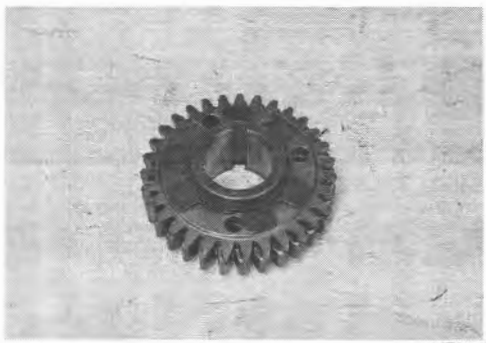

IE31J1530101-01

Primary Drive Gear Disassembly and Reassembly

BENL06L25306021

Refer to "Primary Drive Gear Removal and Installation" (Page 5C-23).

Disassembly

Remove the following parts from the primary drive gear (1).

- Snap ring (2)
- Spring washer (3)
- Scissors gear (4)
- Springs (5)

Special tool
09900–06107

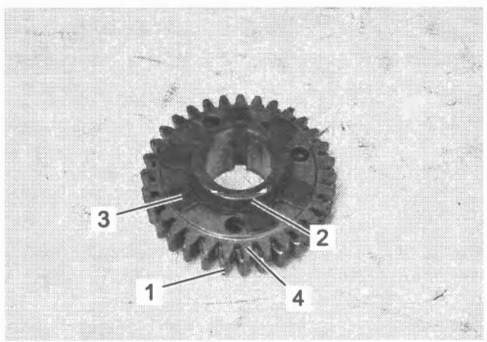

IE31J1530102-02

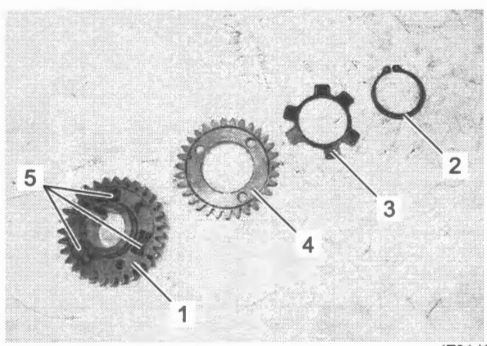

IE31J1530103-01

Reassembly

1) Set the springs (1) into the grooves on the primary drive gear (2).
2) Install the scissors gear (3).

NOTE

Align the holes of the primary drive gear (2) with the holes of the scissors gear (3).

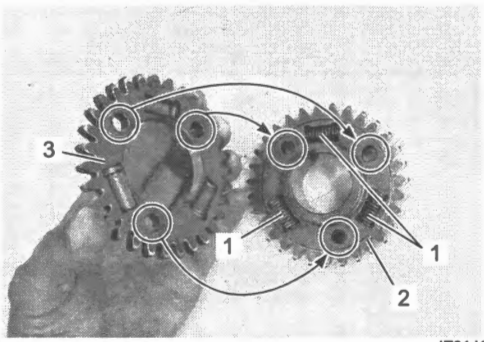

IE31J1530104-02

3) Install the spring washer (1) not to cover the holes (2) of the gears.

NOTE

The convex side of the spring washer (1) faces upward.

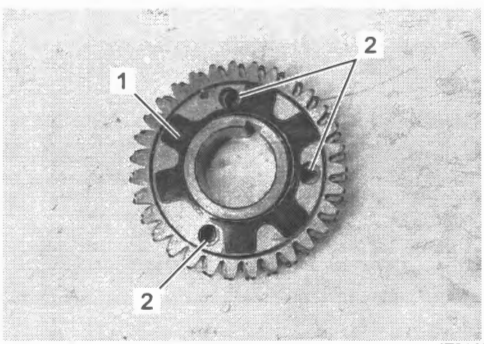

IE31J1530105-01

4) Install the new snap ring (1).

Special tool
09900–06107

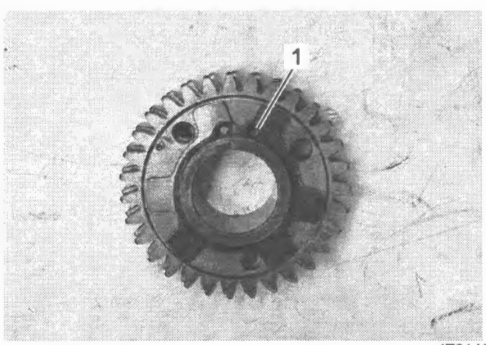

IE31J1530106-01

Specifications

Tightening Torque Specifications

BENL06L25307001

Fastening part	Tightening torque			Note
	N·m	kgf-m	lbf-ft	
Clutch air bleeder valve	5.4	0.55	4.00	☞(Page 5C-6)
Reservoir cap screw	1.5	0.15	1.10	☞(Page 5C-6)
Clutch master cylinder mounting bolt	10	1.0	7.5	☞(Page 5C-8)
Clutch hose union bolt	23	2.3	17.0	☞(Page 5C-9) / ☞(Page 5C-12)
Clutch lever position switch bolt	1.2	0.12	0.90	☞(Page 5C-10)
Clutch lever pivot bolt	5.9	0.60	4.35	☞(Page 5C-11)
Clutch lever pivot bolt lock-nut	5.9	0.60	4.35	☞(Page 5C-11)
Clutch release cylinder mounting bolt	10	1.0	7.5	☞(Page 5C-12)
Clutch sleeve hub nut	150	15.3	111.0	☞(Page 5C-19)
Clutch spring set bolt	10	1.0	7.5	☞(Page 5C-20)
Clutch cover bolt	10	1.0	7.5	☞(Page 5C-21)
Front footrest bracket bolt	26	2.7	19.5	☞(Page 5C-21)
Primary drive gear nut	160	16.3	118.0	☞(Page 5C-24)

Reference:
For the tightening torques of fasteners not specified in this page, refer to:
"Clutch Hose Routing Diagram" (Page 5C-2)
"Clutch Control System Components" (Page 5C-7)
"Clutch Components" (Page 5C-14)
"Fasteners Information" in Section 0C (Page 0C-10)

Special Tools and Equipment

Recommended Service Material

BENL06L25308001

Material	SUZUKI recommended product or Specification		Note
Brake fluid	DOT 4	—	☞(Page 5C-5) / ☞(Page 5C-10) / ☞(Page 5C-13)
Grease	SUZUKI SUPER GREASE A	P/No.: 99000–25011	☞(Page 5C-12)
	SUZUKI SILICONE GREASE	P/No.: 99000–25100	☞(Page 5C-10) / ☞(Page 5C-10) / ☞(Page 5C-10)
Thread lock cement	THREAD LOCK CEMENT 1322D	P/No.: 99000–32150	☞(Page 5C-21)

NOTE

Required service material(s) is also described in:
"Clutch Control System Components" (Page 5C-7)
"Clutch Components" (Page 5C-14)

Special Tool

BENL06L25308002

09900–06107 Snap ring pliers (External) ☞(Page 5C-17) / ☞(Page 5C-17) / ☞(Page 5C-25) / ☞(Page 5C-25)	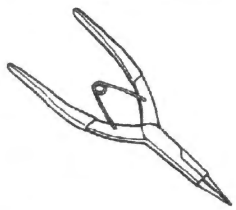	09900–06108 Snap ring pliers (Internal) ☞(Page 5C-9)	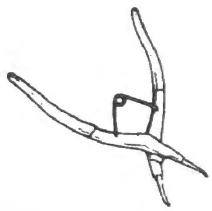
09900–20102 Vernier calipers (200 mm) ☞(Page 5C-21) / ☞(Page 5C-22) / ☞(Page 5C-22)	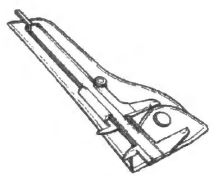	09900–20803 Thickness gauge ☞(Page 5C-22)	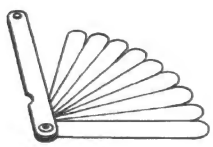
09920–31020 Extension handle ☞(Page 5C-16) / ☞(Page 5C-19)	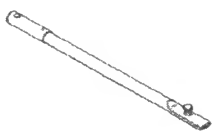	09920–53740 Clutch sleeve hub holder ☞(Page 5C-16) / ☞(Page 5C-19)	
09930–40113 Rotor holder ☞(Page 5C-23) / ☞(Page 5C-24)	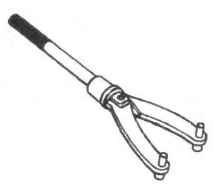		

Section 6

Steering

CONTENTS

Precautions 6-1
Precautions 6-1
Precautions for Steering 6-1

Steering General Diagnosis 6A-1
Diagnostic Information and Procedures 6A-1
Steering Symptom Diagnosis 6A-1

Steering / Handlebar 6B-1
Repair Instructions 6B-1
Handlebar Components 6B-1
Handlebar Construction 6B-2
Handlebar Removal and Installation 6B-3
Throttle Grip Assembly Removal and Installation 6B-6
Left Handle Switch Removal and Installation 6B-7
Handlebar Inspection 6B-7
Steering Stem Components 6B-8
Steering On-Vehicle Inspection 6B-9
Steering Tension Adjustment 6B-9
Steering Stem Upper Bracket Removal and Installation 6B-9
Steering Stem Upper Bracket Inspection 6B-11
Steering Stem Removal and Installation 6B-11
Steering Stem Inspection 6B-14
Steering Stem Bearing Removal and Installation 6B-14
Specifications 6B-16
Tightening Torque Specifications 6B-16
Special Tools and Equipment 6B-17
Recommended Service Material 6B-17
Special Tool 6B-17

Precautions

Precautions

Precautions for Steering

BENL06L26000001

Refer to "General Precautions" in Section 00 (Page 00-1).

Steering General Diagnosis

Diagnostic Information and Procedures

Steering Symptom Diagnosis

BENL06L26104001

Condition	Possible cause	Correction / Reference Item
Heavy steering	Over tightened steering stem nut.	*Adjust. ☞(Page 0B-26)*
	Broken bearing in steering stem.	*Replace. ☞(Page 6B-14)*
	Distorted steering stem.	*Replace. ☞(Page 6B-11)*
	Not enough pressure in tires.	*Adjust. ☞(Page 0B-25)*
Wobbly handlebar	Loss of balance between right and left front forks.	*Replace fork, adjust fork oil level or replace fork spring. ☞(Page 2B-3) ☞(Page 2B-4)*
	Distorted front fork.	*Repair or replace. ☞(Page 2B-3)*
	Distorted front axle or crooked tire.	*Replace. ☞(Page 2D-5) ☞(Page 2D-19)*
	Loose steering stem nut.	*Adjust. ☞(Page 0B-26)*
	Worn or incorrect tire.	*Replace. ☞(Page 2D-19)*
	Incorrect tire pressure.	*Adjust. ☞(Page 0B-25)*
	Worn bearing/race in steering stem.	*Replace. ☞(Page 6B-14)*

Steering / Handlebar

Repair Instructions

Handlebar Components

BENL06L26206001

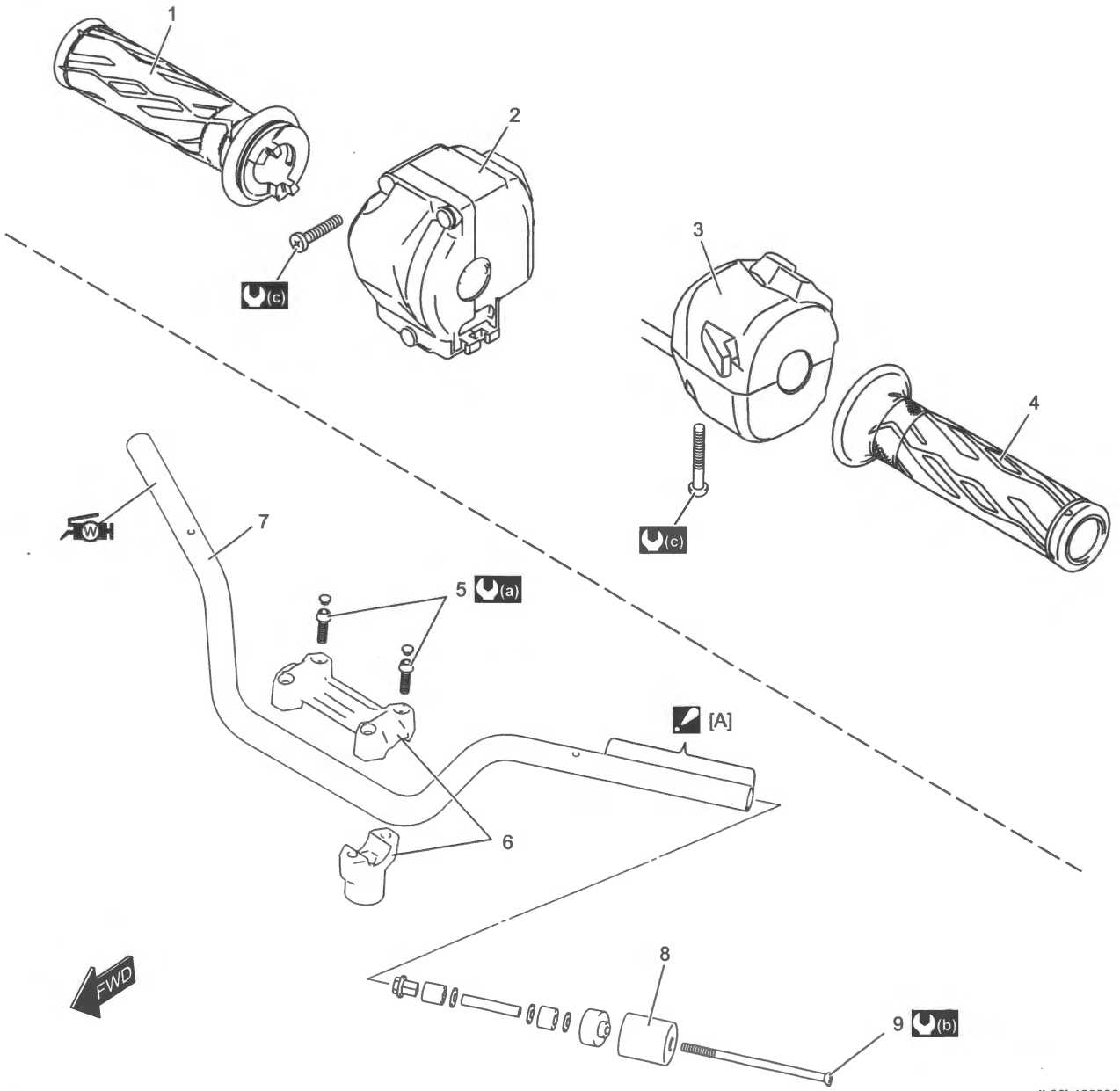

IL06L1620001-01

[A]: Apply handle grip glue.	5. Handlebar clamp bolt	(a) : : 23 N·m (2.3 kgf-m, 17.0 lbf-ft)
1. Throttle grip	6. Handlebar holder	(b) : : 8.4 N·m (0.86 kgf-m, 6.20 lbf-ft)
1. Throttle case	7. Handlebars	(c) : : 3.0 N·m (0.31 kgf-m, 2.25 lbf-ft)
3. Left handle switch	8. Handlebar balancer	W : Apply grease.
4. Left handle grip	9. Handlebar balancer screw	

Handlebar Construction

BENL06L26206002

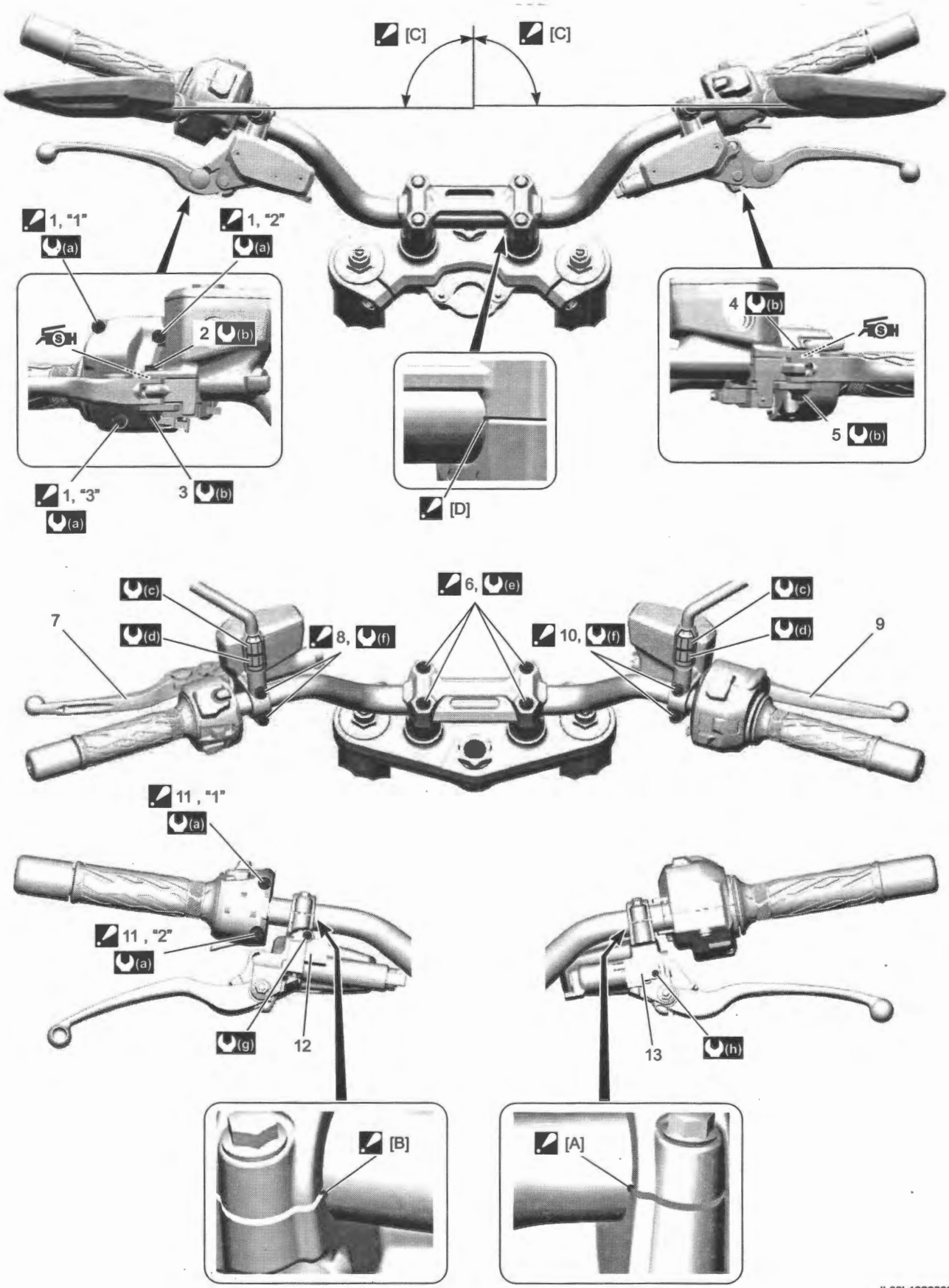

IL06L1620002-02

[A]: Align the punch mark of handlebars with the edge of front brake master cylinder.	6. Handlebar clamp bolt Tighten the handlebar clamp bolts to the specified torque from the front ones first.	(b) : 5.9 N·m (0.60 kgf-m, 4.35 lbf-ft)
[B]: Align the punch mark of handlebars with the edge of clutch master cylinder.	7. Clutch lever	(c) : 18 N·m (1.8 kgf-m, 13.5 lbf-ft)
[C]: Set the center line of the rear view mirror stay at 90° from the center line of the motorcycle.	8. Clutch lever holder bolt Tighten the clutch lever holder bolts to the specified torque from the upper side first.	(d) : 28 N·m (2.9 kgf-m, 21.0 lbf-ft)
[D]: Align the matching surface of handlebar holder with punch mark of handlebars.	9. Brake lever	(e) : 23 N·m (2.3 kgf-m, 17.0 lbf-ft)
1. Throttle grip screw : Tighten the throttle screws in order of "1" → "2" → "3".	10. Brake lever holder bolt Tighten the brake lever holder bolts to the specified torque from the upper side first.	(f) : 10 N·m (1.0 kgf-m, 7.5 lbf-ft)
2. Blake lever pivot bolt	11. Left handle switch Tighten the Left handle switch screws in order of "1" → "2".	(g) : 0.6 N·m (0.06 kgf-m, 0.45 lbf-ft)
3. Blake lever pivot nut	12. Clutch lever position switch	(h) : 1.1 N·m (0.11 kgf-m, 0.85 lbf-ft)
4. Clutch lever pivot bolt	13. Front brake light switch	SH : Apply silicone grease.
5. Clutch lever pivot nut	(a) : 3.0 N·m (0.31 kgf-m, 2.25 lbf-ft)	

Handlebar Removal and Installation

BENL06L26206003

Removal

NOTE

Do not turn the master cylinder upside down.

1) Remove the following parts from the left side of the handlebar.
   a) Left knuckle cover (If equipped) ☞(Page 9D-7)
   b) Rear view mirror (1)
   c) Clutch master cylinder assembly (2)
   d) Helmet lock
   e) Left handle switch box (3) ☞(Page 6B-7)
   f) Handlebar balancer (4)
   g) Left handlebar grip (5)

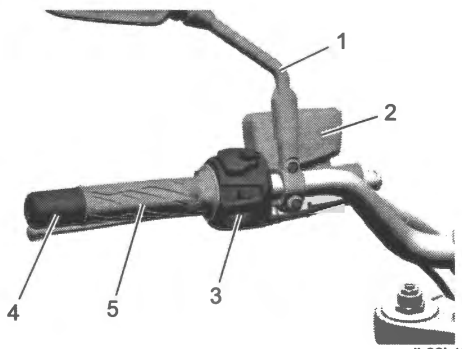

IL06L1620003-02

2) Remove the following parts from the right side of the handlebar.
   a) Right knuckle cover (If equipped) ☞(Page 9D-7)
   b) Rear view mirror (1)
   c) Front brake master cylinder assembly (2)
   d) Handlebar balancer (3)
   e) Throttle grip assembly (4) ☞(Page 6B-6)

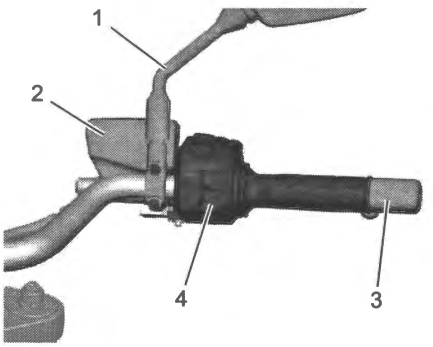

IL06L1620004-02

3) Remove the caps (1), bolts (2) and handle holder (3).

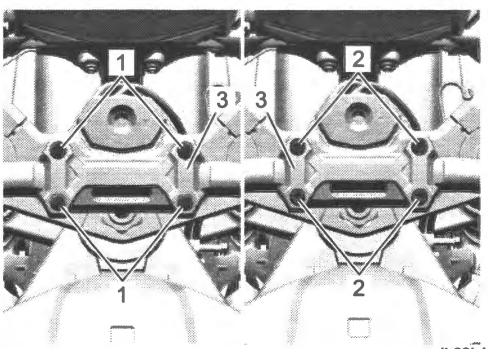

IL06L1620005-01

4) Remove the handlebars (1) then remove the throttle grip assembly (2).

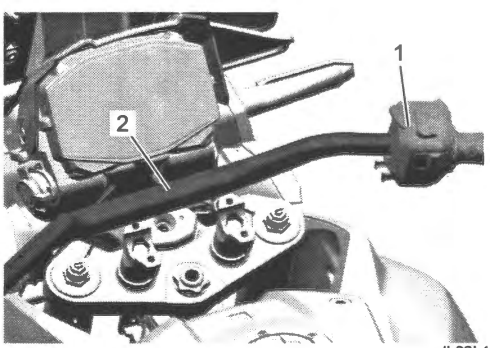

IL06L1620006-01

Installation

1) Apply grease onto the handlebars before installing the throttle grip.

"A": Grease 99000–25350 (SUZUKI WATER RESISTANT GREASE EP2)

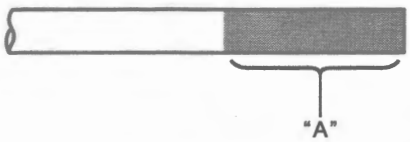

IE31J1620008-02

2) Temporarily install the throttle grip assembly (1) to the handlebars (2).

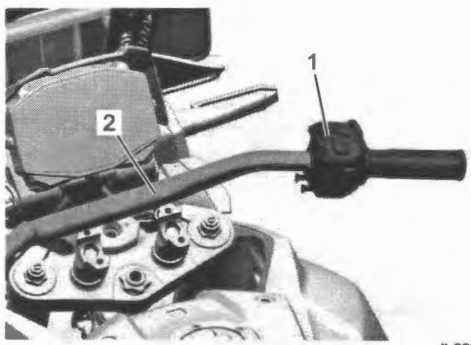

IL06L1620007-01

3) Install the handlebars.

4) Install the handlebar holder (1) in correct direction as shown.

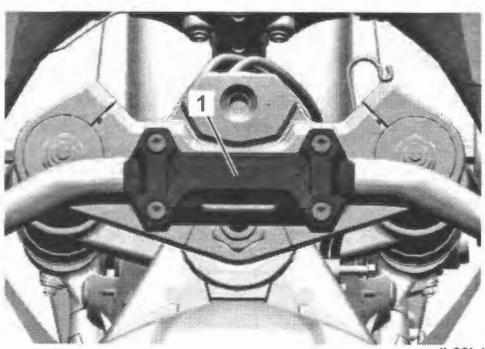

IL06L1620008-01

5) Put the center of punch mark (1) on the handlebars to the edge of the upper holder (2) and tighten the handlebar clamp bolts from the front ones (3) first.

Tightening torque
Handlebar clamp bolt (a): 23 N·m (2.3 kgf-m, 17.0 lbf-ft)

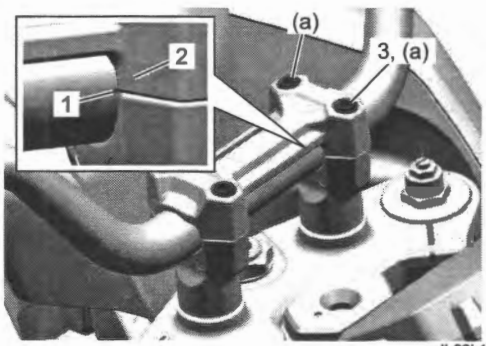

IL06L1620009-01

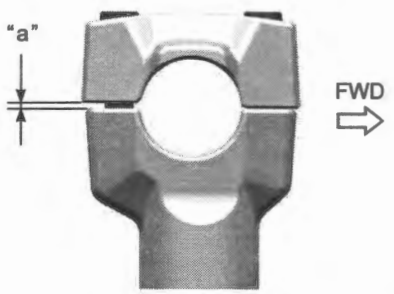

IL06L1620010-01

"a": Clearance

6) Install the handlebar clamp bolt caps.

7) Insert the projection (1) of the throttle grip assembly into the hole of the handlebars.

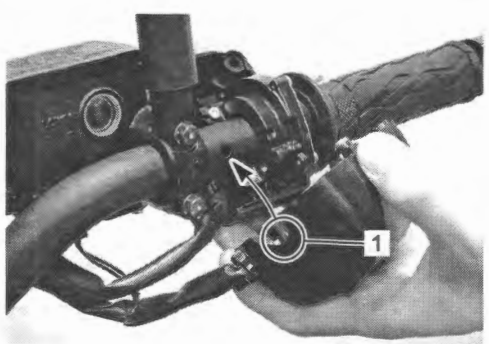

IL06L1620011-02

8) Install the right handlebar balancer and tighten the handlebar balancer screw.

Tightening torque
Handlebar balancer screw: 8.4 N·m (0.86 kgf-m, 6.20 lbf-ft)

9) Install the front brake master cylinder assembly. ☞(Page 4A-14)

10) Install the right rear view mirror. Tighten the rear view mirror adapter (1) and rear view mirror nut (2) to the specified torque.

Tightening torque
Rear view mirror adapter (a): 28 N·m (2.9 kgf-m, 21.0 lbf-ft)
Rear view mirror nut (b): 18 N·m (1.8 kgf-m, 13.5 lbf-ft)

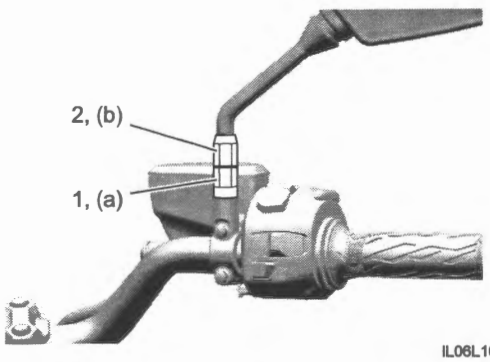

IL06L1620012-01

11) Install the right knuckle cover. (If equipped) ☞(Page 9D-7)

12) Clean, degrease and dry both the left handlebar outer surface (1) on which the grip is being fitted and internal surface of the left handlebar grip (2).

13) Apply handle grip glue to both the left handlebar outer surface (1) on which the grip is being fitted and internal surface of the left handlebar grip (2) evenly.

"A": Adhesive (Handle grip glue)

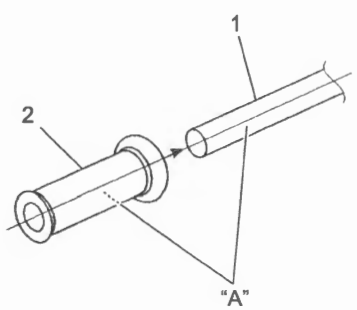

IE31J1620012-01

14) Install the left handlebar balancer and tighten the handlebar balancer screw.

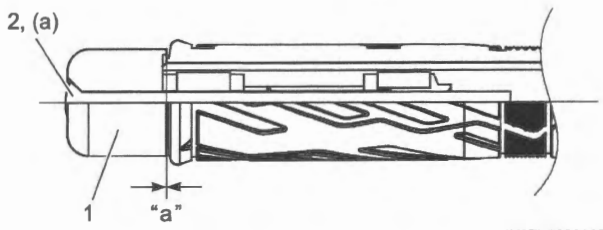

IK07L1620007-03

Tightening torque
Handlebar balancer screw: 8.4 N·m (0.86 kgf-m, 6.20 lbf-ft)

15) Insert the projection (1) of the left handle switch box into the hole of the handlebars.

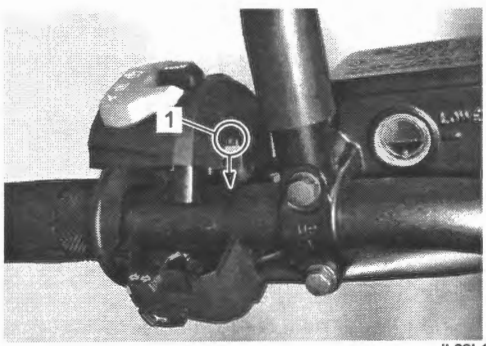

IL06L1620013-01

16) Install the clutch master cylinder. ☞(Page 5C-8)

17) Install the left rear view mirror. Tighten the rear view mirror adapter (1) and rear view mirror nut (2) to the specified torque.

Tightening torque
Rear view mirror adapter (a): 28 N·m (2.9 kgf-m, 21.0 lbf-ft)
Rear view mirror nut (b): 18 N·m (1.8 kgf-m, 13.5 lbf-ft)

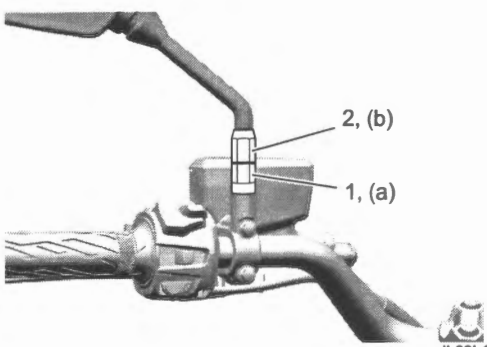

IL06L1620014-01

18) Install the left knuckle cover. (If equipped) ☞(Page 9D-7)

19) Check to make sure that the wire harnesses, cables and hoses are properly routed.
- Wire harness: ☞(Page 9A-23)
- Hose: ☞(Page 4A-2)

20) Check that the throttle grip can operate smoothly.

Throttle Grip Assembly Removal and Installation

BENL06L26206004

NOTE

Refer to "Precautions for Electric Throttle Control System" in Section 1C (Page 1C-1).

Removal

1) Remove the air cleaner box. ☞(Page 1D-6)
2) Remove the right handlebar balancer.
3) Remove the right knuckle cover. (if equipped) ☞(Page 9D-7)
4) Disconnect the clamps (1).

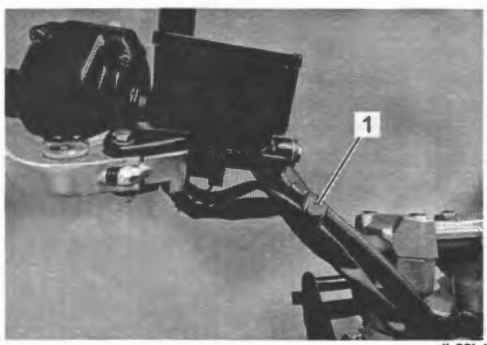

IL06L1620015-01

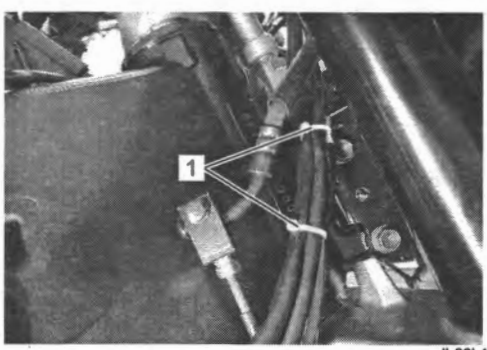

IL06L1620016-01

5) Disconnect the right handle switch coupler (1) and accelerator position sensor coupler (2).

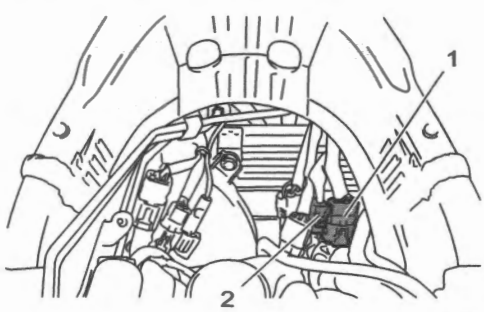

IL06L1620047-01

6) Remove the throttle grip assembly (1).



IL06L1620019-01

Installation

Install the throttle grip assembly in the reverse order of removal.
Pay attention to the following point:

- Apply grease onto the handlebars before installing the throttle grip.

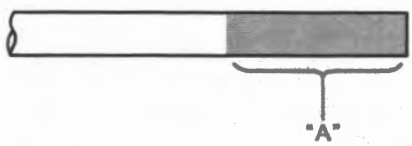

IE31J1620008-02

"A": Grease 99000–25011 (SUZUKI SUPER GREASE A)

- Route the right handle switch harness. Refer to "Wiring Harness Routing Diagram" in Section 9A (Page 9A-23).
- Tighten throttle grip screws (1) to the specified torque in order of "1" → "2" → "3".

Tightening torque
Throttle grip screw: 3.0 N·m (0.31 kgf-m, 2.25 lbf-ft)

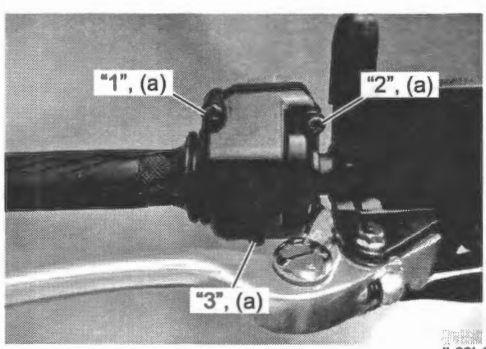

IL06L1620020-01

- Check that the throttle grip can operate smoothly. Reset the TP fully closed learned value when replacing the throttle grip assembly. ☞(Page 1C-3)

Left Handle Switch Removal and Installation

BENL06L26206005

Removal

1) Remove the air cleaner box. ☞(Page 1D-6)
2) Remove the left handlebar balancer.
3) Remove the left knuckle cover. (if equipped) ☞(Page 9D-7)
4) Disconnect the clamps (1).

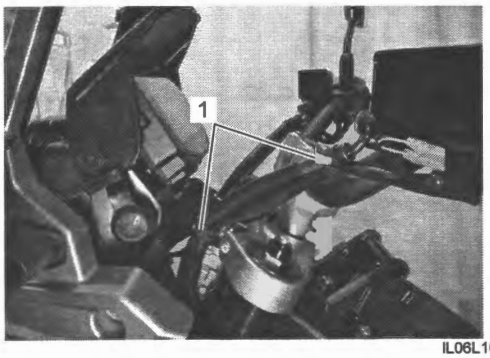

IL06L1620021-01

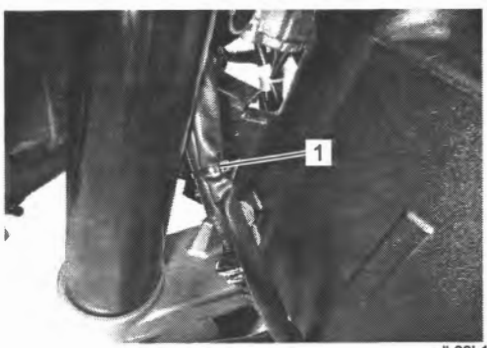

IL06L1620022-01

5) Disconnect the left handle switch coupler (1).

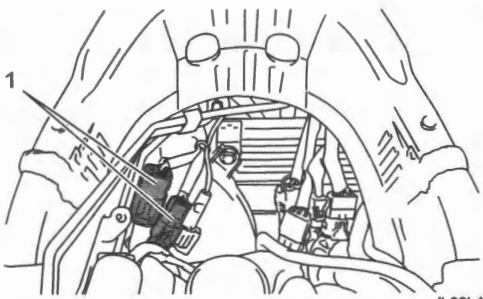

IL06L1620048-01

6) Remove the left handle switch (1).

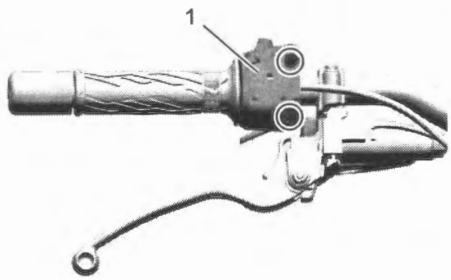

IL06L1620024-01

Installation

Install the left handle switch in the reverse order of removal.
Pay attention to the following point:

- Route the left handle switch harness. Refer to "Wiring Harness Routing Diagram" in Section 9A (Page 9A-23).
- Insert the projection (1) of the left handle switch box into the hole of the handlebars.

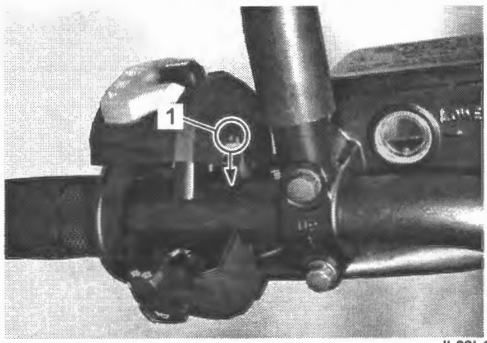

IL06L1620025-01

- Tighten left handle switch screws (1) to the specified torque in order of "1" → "2".

Tightening torque
Left handle switch screw: 3.0 N·m (0.31 kgf-m, 2.25 lbf-ft)

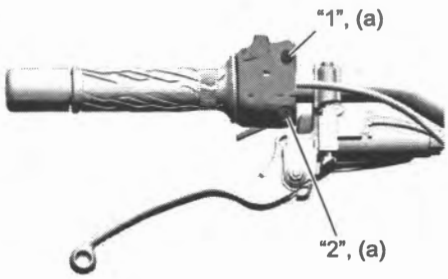

IL06L1620026-01

Handlebar Inspection

BENL06L26206006

Refer to "Handlebar Removal and Installation" (Page 6B-3).
Inspect the handlebars for distortion and damage.
If any defect is found, replace the handlebars with a new one.

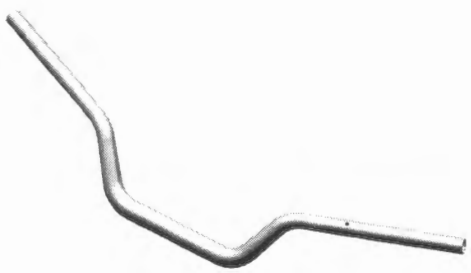

IL06L1620027-01

Steering Stem Components

BENL06L26206007

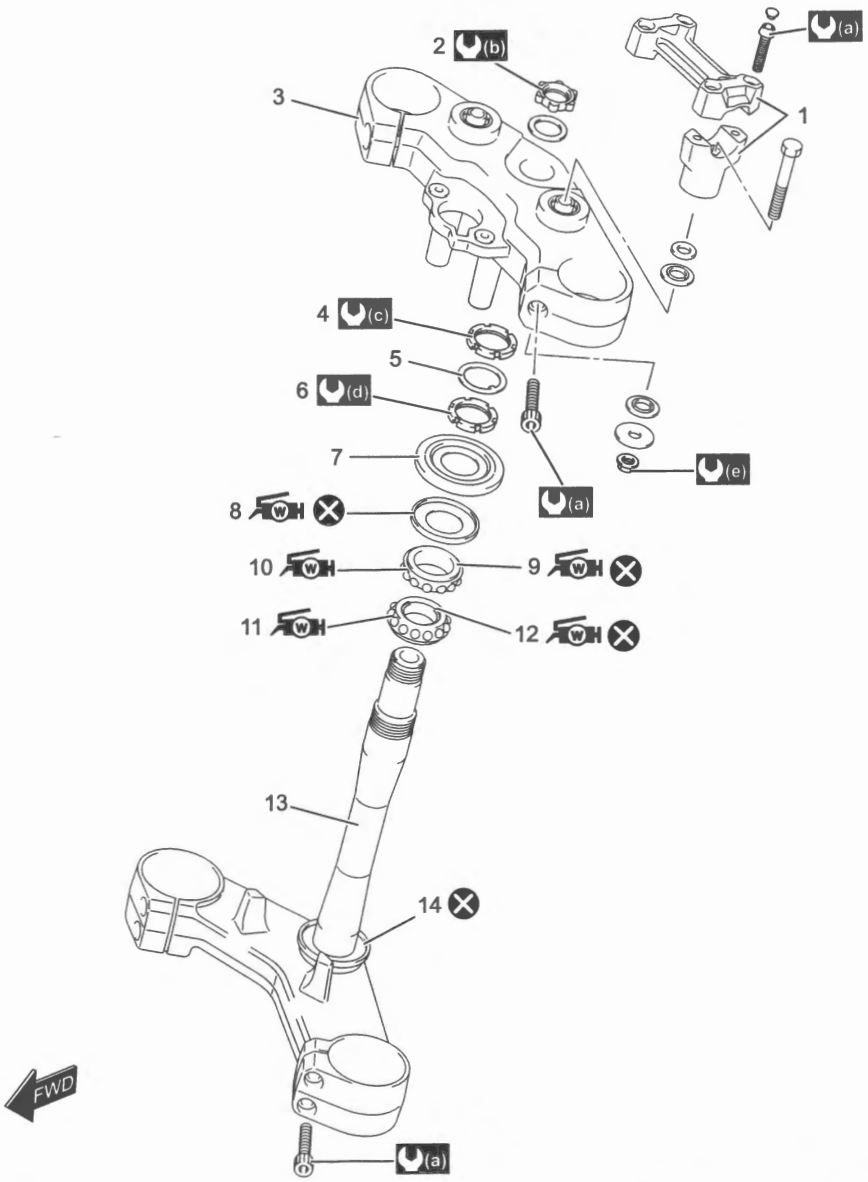

IL06L1620028-01

[A]: DL1000A	5. Washer	11. Steering stem lower bearing	(c) : 80 N·m (8.2 kgf-m, 59.0 lbf-ft)
[B]: DL1000XA	6. Steering stem nut	12. Steering stem lower bearing inner race	(d) : 20 N·m (2.0 kgf-m, 15.0 lbf-ft) → turn counterclockwise 0 – 1/4
1. Handlebar holder	7. Dust cover	13. Steering stem lower bracket	(e) : 45 N·m (4.6 kgf-m, 33.5 lbf-ft)
2. Steering stem top nut	8. Dust seal	14. Lower seal	: Apply grease.
3. Steering stem upper bracket	9. Steering stem upper bearing inner race	(a) : 23 N·m (2.3 kgf-m, 17.0 lbf-ft)	: Do not reuse.
4. Steering stem lock-nut	10. Steering stem upper bearing	(b) : 90 N·m (9.2 kgf-m, 66.5 lbf-ft)	

Steering On-Vehicle Inspection

BENL06L26206008

Refer to "Inspection" under "Steering" in Section 0B (Page 0B-26).

Steering Tension Adjustment

BENL06L26206009

Refer to "Adjustment" under "Steering" in Section 0B (Page 0B-26).

Steering Stem Upper Bracket Removal and Installation

BENL06L26206010

Removal

1) Support the motorcycle with a jack.
2) Remove the air cleaner box. ☞(Page 1D-6)
3) Disconnect the ignition switch lead wire coupler (1) and immobilizer antenna lead wire coupler (2). (If equipped)

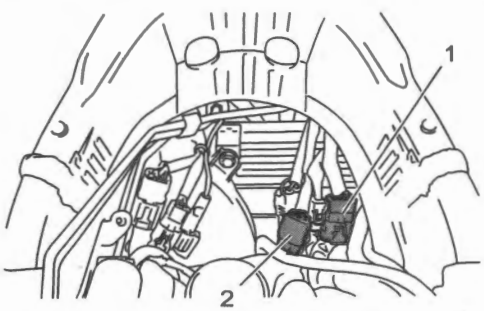

IL06L1620051-01

4) Disconnect the clamps (1).

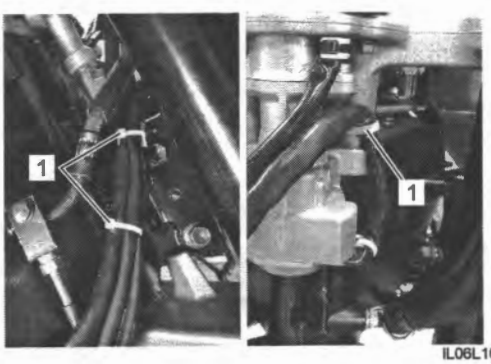

IL06L1620030-01

5) Remove the guide (1).



IL06L1620052-01

6) Remove the caps (1), bolts (2) and handle holder (3).

NOTE

Slightly loosen the handlebar holder nuts (4) to facilitate later disassembly.

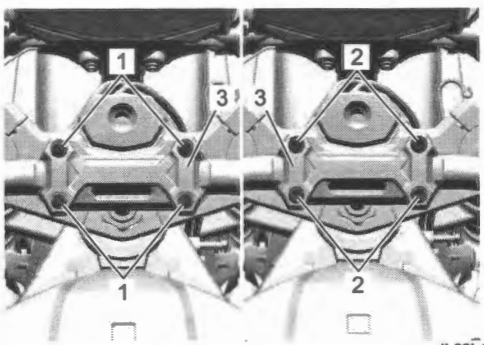

IL06L1620031-03

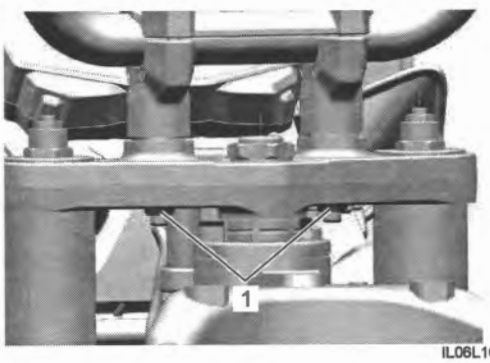

IL06L1620032-01

7) Remove the handlebars backward.

NOTE

Place a rag on the frame to prevent the handlebars scratched.

8) Loosen the front fork upper clamp bolts (1).
9) Remove the steering stem top nut (2), washer (3) and steering stem upper bracket assembly (4).

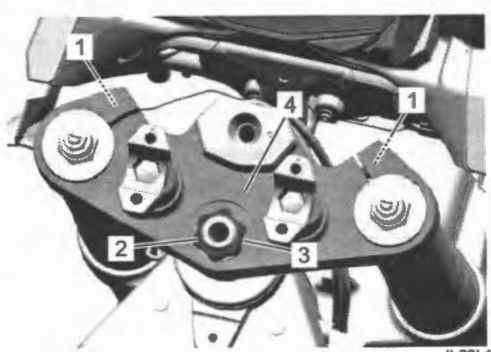

IL06L1620033-01

10) Remove the ignition switch and ignition switch cover. ☞(Page 1H-9)
11) Remove the immobilizer antenna. (If equipped) ☞(Page 1H-9)
12) Remove the handlebar holders (1).

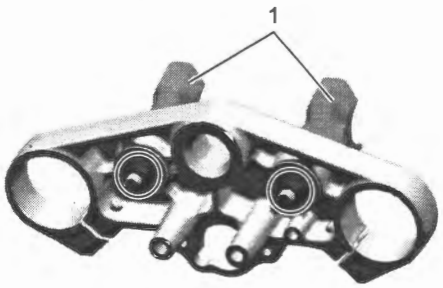

IL06L1620034-01

13) Remove the following parts from the steering stem upper bracket.
- Washer (1)
- Rubber (2)

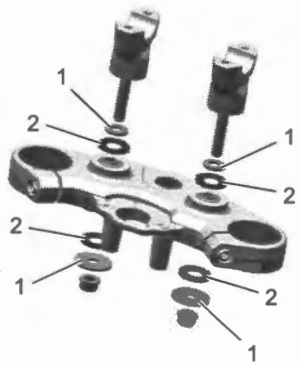

IL06L1620049-01

Installation

1) Install the following parts to the steering stem upper bracket.
- Rubber (1)
- Washer (2)
- Handlebar holder (3)
- Nut (4)

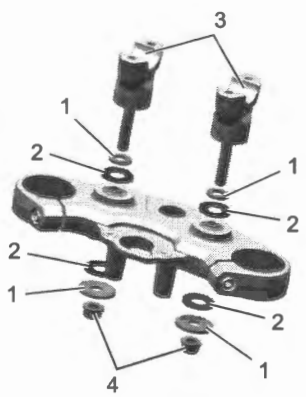

IL06L1620050-01

2) Place the handlebar holder at right angles with the steering stem upper bracket (1), then temporarily tighten it.

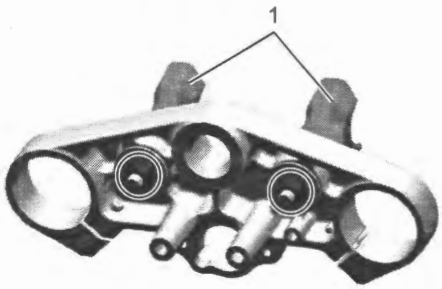

IL06L1620037-01

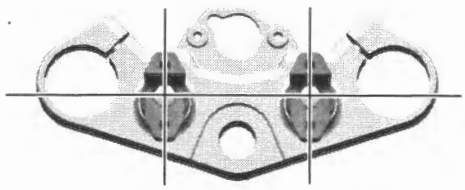

IL06L1620038-01

3) Install the immobilizer antenna. (If equipped) ☞(Page 1H-9)
4) Install the ignition switch and ignition switch cover. ☞(Page 1H-9)
5) Install the steering stem upper bracket assembly (1), washer (2) and steering stem top nut (3).
6) Tighten the steering stem top nut (3) and front fork upper clamp bolts (4) to the specified torque.

Tightening torque
Steering stem top nut (a): 90 N·m (9.2 kgf-m, 66.5 lbf-ft)
Front fork upper clamp bolt (b): 23 N·m (2.3 kgf-m, 17.0 lbf-ft)

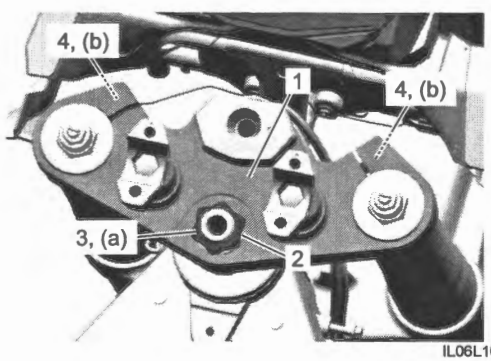

IL06L1620039-01

7) Install the handlebars. ☞(Page 6B-3)
8) Tighten the handlebar holder nuts (1) to the specified torque.

Tightening torque
Handlebar holder nut (a): 45 N·m (4.6 kgf-m, 33.5 lbf-ft)

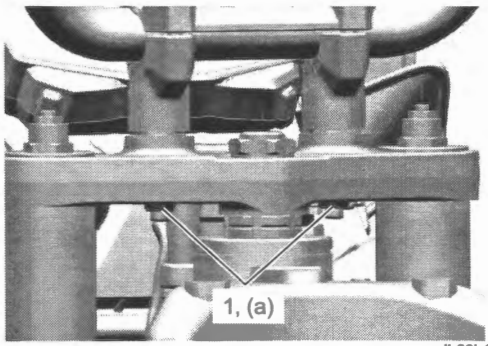

IL06L1620040-01

9) Install the guide (1). Refer to "Wiring Harness Routing Diagram" in Section 9A (Page 9A-23) and "Front Brake Hose Routing Diagram" in Section 4A (Page 4A-2).

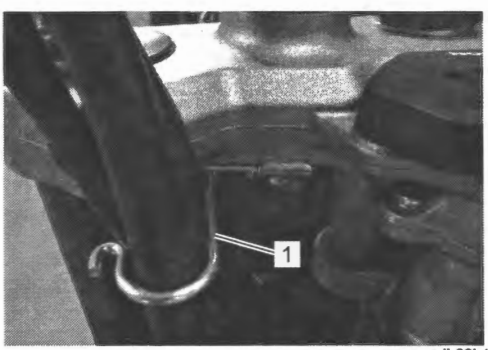

IL06L1620041-05

10) Pass the wire harness and connect the clamps (1). Refer to "Wiring Harness Routing Diagram" in Section 9A (Page 9A-23).



IL06L1620042-01

11) Connect the ignition switch lead wire coupler and immobilizer antenna lead wire coupler. (If equipped)
12) Install the air cleaner box. ☞(Page 1D-6)

Steering Stem Upper Bracket Inspection

BENL06L26206011

Refer to "Steering Stem Upper Bracket Removal and Installation" (Page 6B-9).
Inspect handlebar bushings (1) for damage.
If any damage is found, replace the steering stem upper bracket with a new one.

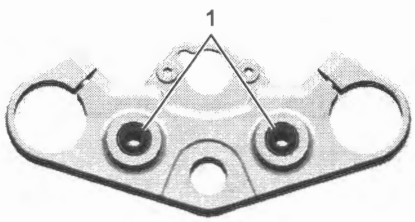

IL06L1620043-01

Steering Stem Removal and Installation

BENL06L26206012

Removal

1) Remove the front forks. ☞(Page 2B-3)
2) Remove the guide (1).



IL06L1620041-05

3) Remove the handlebars (1) backward.

NOTE

Place a rag on the fuel tank to prevent the fuel tank scratched.

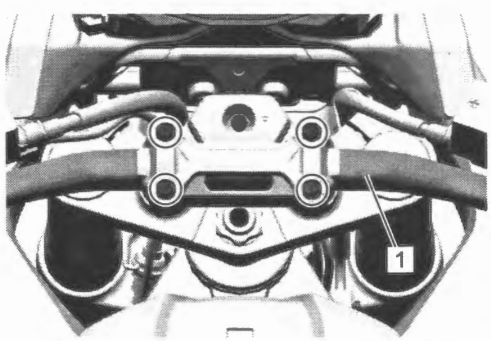

IL06L1620044-01

4) Remove the steering stem top nut (1) and washer (2), and then remove the steering stem upper bracket assembly (3).

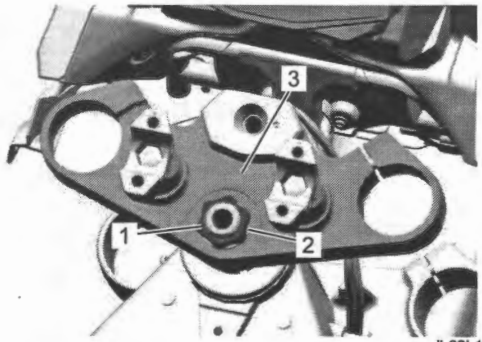

IL06L1620045-01

5) While holding the steering stem lower bracket, remove the steering stem lock-nut (1), washer (2) and steering stem nut (3) with the special tools.

Special tool
(A): 09940–14911
(B): 09940–14960

6) Remove the steering stem lower bracket.

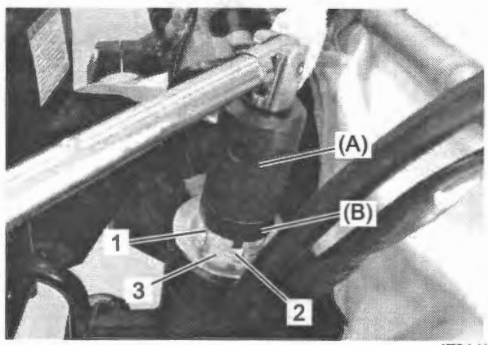

IE31J1620037-01

7) Remove the dust cover (1), dust seal (2), steering stem upper bearing inner race (3) and steering stem upper bearing (4).

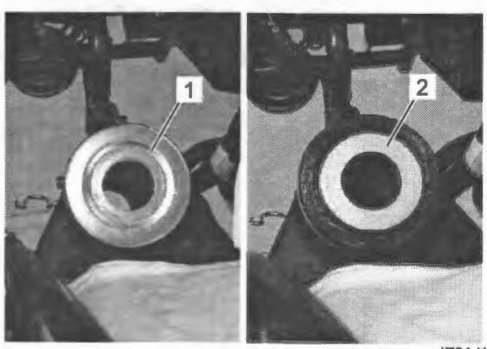

IE31J1620038-01

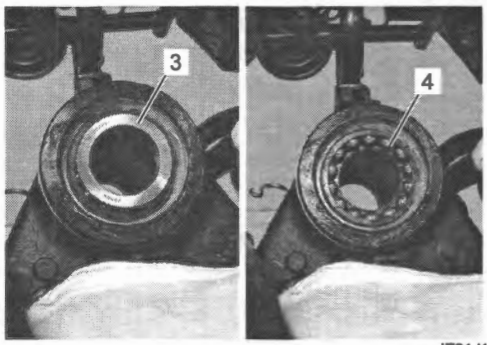

IE31J1620039-01

8) Remove the steering stem lower bearing (1).

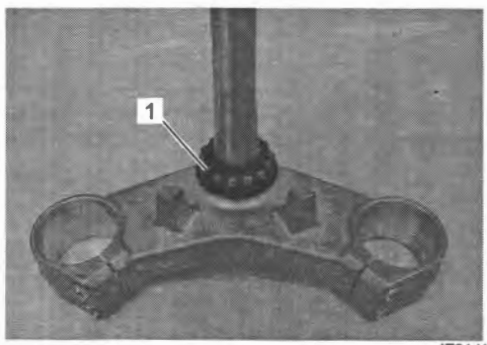

IE31J1620040-01

Installation

1) Apply grease to the bearings, races, lower seal and new dust seal lip, and install the steering stem lower bracket to the frame.

"A": Grease 99000–25350 (SUZUKI WATER RESISTANT GREASE EP2)

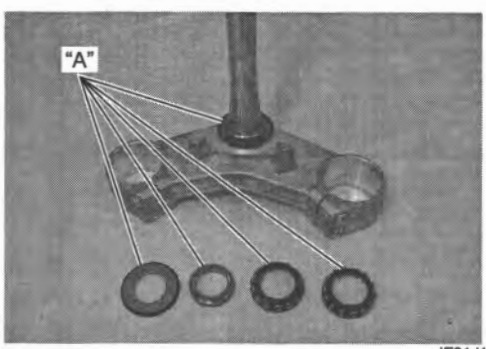

IE31J1620041-01

2) Install the steering stem nut (1) and temporarily tighten it to the specified torque (20 N·m (2.0 kgf-m, 14.5 lbf-ft)) with the special tools.

Special tool
(A): 09940–14911
(B): 09940–14960

3) Turn the steering stem lower bracket to the left and right about five or six times so that the taper roller bearings seat properly.

4) Loosen the steering stem nut 0 – 1/4 turn "a".

Tightening torque
Steering stem nut (a): 20 N·m (2.0 kgf-m, 15.0 lbf-ft) → turn counterclockwise 0 – 1/4

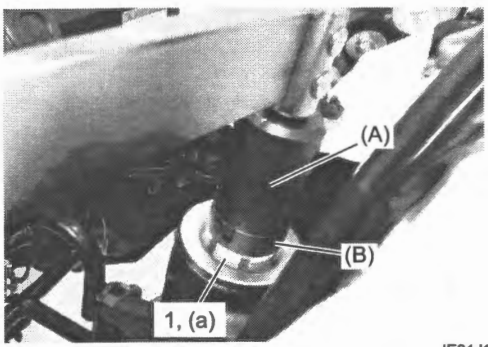

IE31J1620042-01

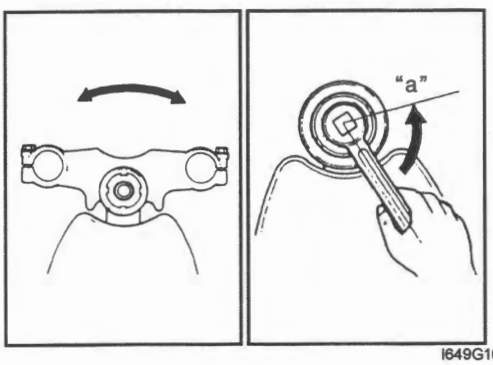

I649G1620026-02

5) In this condition, check that the steering stem lower bracket can turn smoothly without rattle and stiffness. If there is a rattle or heavy movement, readjust the tightness by the stem nut.

6) When installing the washer (1), align the lug (2) of the washer to the groove of the steering stem.

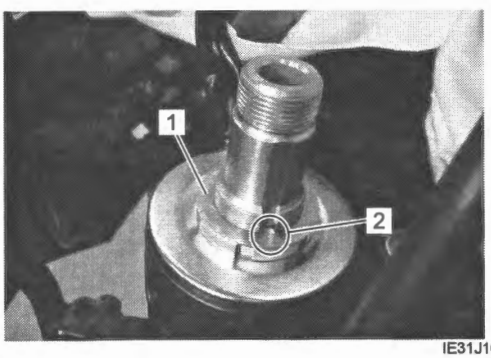

IE31J1620043-01

7) Tighten the steering stem lock-nut (1) to the specified torque with the special tools.

Special tool
(A): 09940–14911
(B): 09940–14960

Tightening torque
Steering stem lock-nut (a): 80 N·m (8.2 kgf-m, 59.0 lbf-ft)

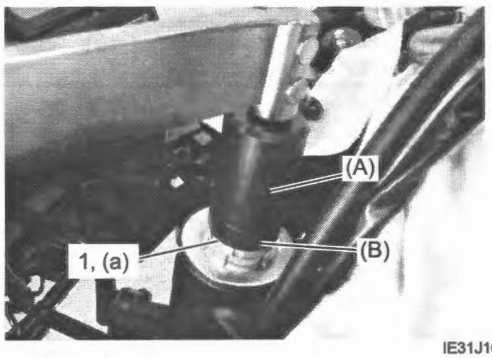

IE31J1620044-01

8) Install the steering stem upper bracket (1), washer (2) and steering stem top nut (3) temporarily.

9) Install the front forks (4) temporarily.

10) Tighten the steering stem top nut (3) to the specified torque.

Tightening torque
Steering stem top nut (a): 90 N·m (9.2 kgf-m, 66.5 lbf-ft)

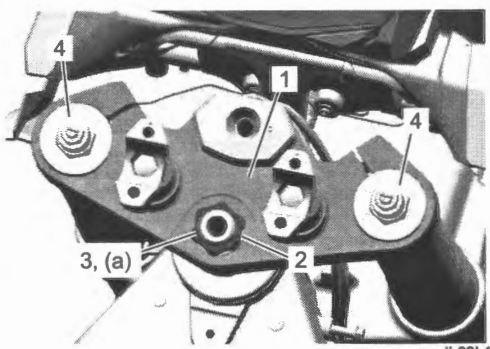

IL06L1620046-01

11) Install the front forks. ☞(Page 2B-3)
12) Install the handlebars. ☞(Page 6B-3)
13) Install the guide (1). Refer to "Wiring Harness Routing Diagram" in Section 9A (Page 9A-23) and "Front Brake Hose Routing Diagram" in Section 4A (Page 4A-2).

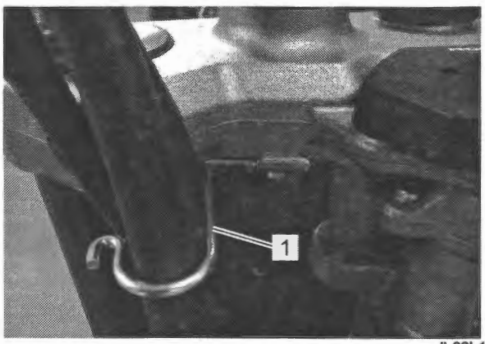

IL06L1620041-05

14) Check the steering tension. ☞(Page 0B-26)

Steering Stem Inspection

BENL06L26206013

Refer to "Steering Stem Removal and Installation" (Page 6B-11).
Inspect the removed parts for the following abnormalities:

- Distortion of the steering stem
- Bearing wear or damage
- Abnormal bearing noise
- Race wear or damage
- Bearing lower seal damage
- Dust seal wear or damage

If any abnormal points are found, replace defective parts with new ones.



IE31J1620047-01

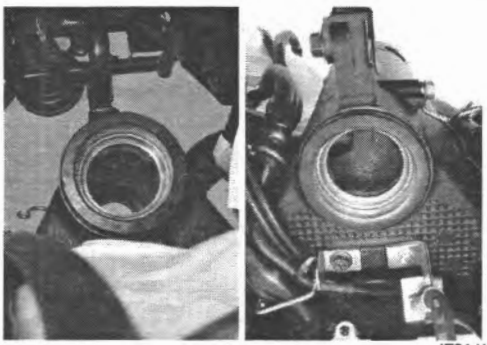

IE31J1620048-01

Steering Stem Bearing Removal and Installation

BENL06L26206014

Removal

1) Remove the steering stem upper bearing (1) and steering stem lower bearing (2). Refer to "Steering Stem Removal and Installation" (Page 6B-11).

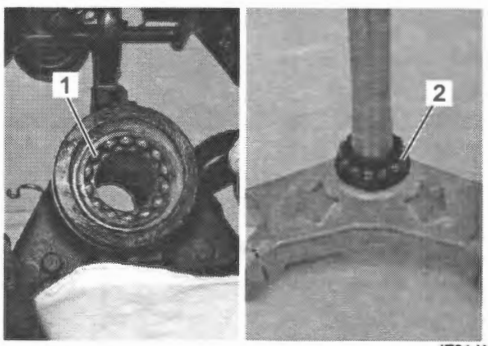

IE31J1620049-01

2) Remove the steering stem lower bearing inner race and lower seal with a chisel.

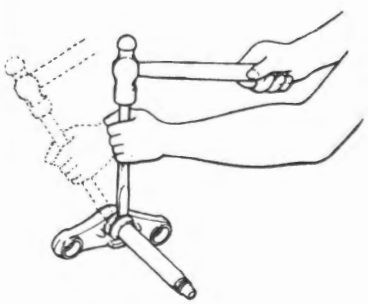

I649G1620033-02

3) Remove the steering stem upper and lower bearing outer races using the special tools.

Special tool
(A): 09941–54911
(B): 09925–18011

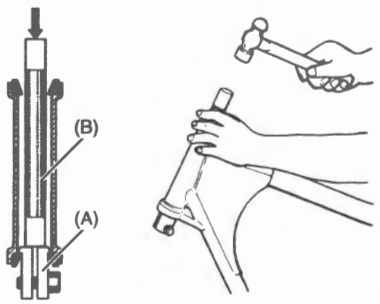

ID26J1620040-01

Installation

1) Press in the new upper and lower outer races using the special tools.

Special tool
(A): 09941–34513
(B): 09913–70210

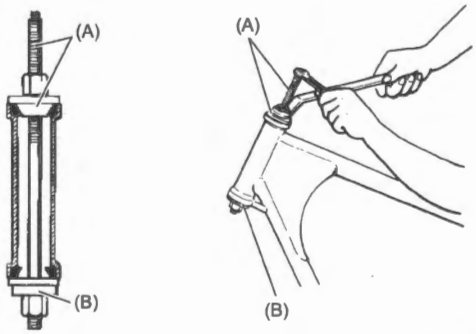

IE31J1620050-01

2) Press in the new lower inner race with bearing roller using the special tool.

Special tool
(A): 09925–18011

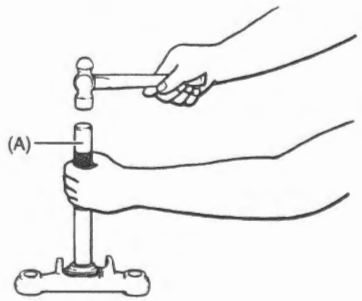

ID26J1620042-01

3) Install the steering stem lower bracket to the frame. ☞(Page 6B-11)

Specifications

Tightening Torque Specifications

BENL06L26207001

Fastening part	Tightening torque			Note
	N·m	kgf-m	lbf-ft	
Handlebar clamp bolt	23	2.3	17.0	☞(Page 6B-4)
Handlebar balancer screw	8.4	0.86	6.20	☞(Page 6B-5) / ☞(Page 6B-5)
Rear view mirror adapter	28	2.9	21.0	☞(Page 6B-5) / ☞(Page 6B-5)
Rear view mirror nut	18	1.8	13.5	☞(Page 6B-5) / ☞(Page 6B-5)
Throttle grip screw	3.0	0.31	2.25	☞(Page 6B-6)
Left handle switch screw	3.0	0.31	2.25	☞(Page 6B-7)
Steering stem top nut	90	9.2	66.5	☞(Page 6B-10) / ☞(Page 6B-13)
Front fork upper clamp bolt	23	2.3	17.0	☞(Page 6B-10)
Handlebar holder nut	45	4.6	33.5	☞(Page 6B-11)
Steering stem nut	20 N·m (2.0 kgf-m, 15.0 lbf-ft) → turn counterclockwise 0 – 1/4			☞(Page 6B-13)
Steering stem lock-nut	80	8.2	59.0	☞(Page 6B-13)

Reference:
For the tightening torques of fasteners not specified in this page, refer to:
"Handlebar Components" (Page 6B-1)
"Handlebar Construction" (Page 6B-2)
"Steering Stem Components" (Page 6B-8)
"Fasteners Information" in Section 0C (Page 0C-10)

Special Tools and Equipment

Recommended Service Material

BENL06L26208001

Material	SUZUKI recommended product or Specification		Note
Adhesive	Handle grip glue	—	☞(Page 6B-5)
Grease	SUZUKI SUPER GREASE A	P/No.: 99000–25011	☞(Page 6B-6)
	SUZUKI WATER RESISTANT GREASE EP2	P/No.: 99000–25350	☞(Page 6B-4) / ☞(Page 6B-12)

NOTE

Required service material(s) is also described in:
"Handlebar Components" (Page 6B-1)
"Handlebar Construction" (Page 6B-2)
"Steering Stem Components" (Page 6B-8)

Special Tool

BENL06L26208002

09913–70210 Bearing installer set ☞(Page 6B-15)		09925–18011 Bearing installer ☞(Page 6B-15) / ☞(Page 6B-15)	
09940–14911 Steering stem nut socket ☞(Page 6B-12) / ☞(Page 6B-13) / ☞(Page 6B-13)	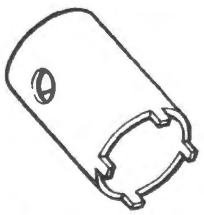	09940–14960 Steering stem nut socket wrench ☞(Page 6B-12) / ☞(Page 6B-13) / ☞(Page 6B-13)	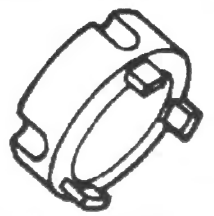
09941–34513 Bearing installer set ☞(Page 6B-15)		09941–54911 Bearing outer race remover ☞(Page 6B-15)	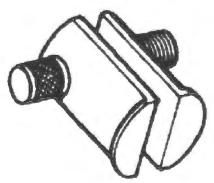

Section 9

Body and Accessories

CONTENTS

Precautions 9-1
Precautions 9-1
Precautions for Electrical System 9-1
Component Location 9-1
Electrical Components Location 9-1

Wiring Systems 9A-1
General Description 9A-1
Abbreviations 9A-1
How to Read System Circuit Diagram 9A-1
How to Read Terminal Nos. 9A-1
Glossary 9A-2
Schematic and Routing Diagram 9A-5
Wiring Diagram (DL1050RQ) 9A-5
Wiring Diagram (DL1050RC) 9A-14
Wiring Harness Routing Diagram 9A-23
Component Location 9A-42
Electrical Components Location 9A-42
Repair Instructions 9A-42
Relay Box Removal and Installation 9A-42
Specifications 9A-42
Tightening Torque Specifications 9A-42

Lighting Systems 9B-1
Precautions 9B-1
Precautions for Lighting Systems 9B-1
Diagnostic Information and Procedures 9B-1
Headlight Symptom Diagnosis 9B-1
Turn Signal Light and Hazard Light Symptom Diagnosis 9B-1
Rear Combination Light Symptom Diagnosis 9B-2
License Plate Light Symptom Diagnosis 9B-2
Repair Instructions 9B-3
Headlight Construction 9B-3
Headlight Removal and Installation 9B-4
Headlight Beam Adjustment 9B-4
High Beam Relay Inspection 9B-5
Rear Lighting System Construction 9B-6
Rear Combination Light Removal and Installation 9B-7
License Plate Light Removal and Installation 9B-7
License Plate Light Bulb Replacement 9B-7
Reflex Reflector Removal and Installation 9B-7
Turn Signal Light Construction 9B-8
Turn Signal Light Components 9B-9
Turn Signal Light Removal and Installation 9B-10
Turn Signal Light Bulb Replacement 9B-10
Reflex Reflector Construction (If Equipped) 9B-11
Turn Signal Relay Inspection 9B-11
Turn Signal Relay Removal and Installation 9B-12
Turn Signal Switch Inspection 9B-12
Hazard Switch Inspection 9B-13
Dimmer / Passing Light Switch Inspection 9B-13
Specifications 9B-13
Tightening Torque Specifications 9B-13

Combination Meter / Fuel Meter / Horn .. 9C-1
Schematic and Routing Diagram 9C-1
Combination Meter Circuit Diagram 9C-1
Component Location 9C-3
Component Location 9C-3
Diagnostic Information and Procedures 9C-4
Combination Meter Symptom Diagnosis 9C-4
Horn Symptom Diagnosis 9C-4
Multifunction Display indicates "Air!" 9C-5
Multifunction Display indicates "SW!" 9C-6
Repair Instructions 9C-8
Combination Meter Construction 9C-8
Ambient Air Temperature Sensor Construction 9C-9
Combination Meter Components 9C-9
Combination Meter On-Vehicle Inspection 9C-10
Service Reminder Reset 9C-10
Traction Control System Indicator / SUZUKI DRIVE MODE SELECTOR (SDMS) Indicator / ABS Mode Indicator Inspection 9C-13
ECT Indicator Inspection 9C-14
Combination Meter Removal and Installation 9C-16
Combination Meter Disassembly and Reassembly 9C-16
ECT Sensor Removal and Installation 9C-16
Fuel Level Indicator Inspection 9C-16
Fuel Level Gauge Inspection 9C-17
Speedometer On-Vehicle Inspection 9C-17
Speed Sensor Removal and Installation 9C-17
Speed Sensor Inspection 9C-17
Ambient Air Temperature Sensor Removal and Installation 9C-17

Freeze Indicator Light / Ambient Air Temperature Indicator Inspection 9C-18
Ambient Air Temperature Sensor Inspection 9C-18
Oil Pressure Indicator Inspection 9C-19
Horn Inspection 9C-19
Horn Removal and Installation 9C-20
Mode Switch Inspection 9C-20
Select Switch Inspection 9C-20
Specifications 9C-21
Tightening Torque Specifications 9C-21
Special Tools and Equipment 9C-21
Special Tool 9C-21

Exterior Parts 9D-1
Schematic and Routing Diagram 9D-1
Seat Lock Cable Routing Diagram 9D-1
Component Location 9D-2
Exterior Components Location 9D-2
Repair Instructions 9D-5
Body Cowling Construction 9D-5
Windscreen Construction 9D-6
Knuckle Cover Construction (If Equipped) 9D-7
Cowling Construction 9D-8
Front Fender Construction 9D-9
Side Cover Construction 9D-10
Fuel Tank Cover Construction 9D-12
Frame Cover Construction 9D-14
Rear Fender Construction 9D-15
Windscreen Cushion Construction 9D-16
Body Center Lower Cowling Cushion 9D-17
Meter Panel Cushion Construction 9D-17
Fuel Tank Cover Cushion Construction 9D-18
Frame Cover Cushion Construction 9D-19
Electric Parts Holder Cushion Construction 9D-20
Rear Fender Cushion Construction 9D-21
Sport Carrier Construction 9D-22
Battery Box Cushion Construction 9D-23
Electric parts holder and Rear Fender (Front) Cushion Construction 9D-25
Pivot Cover Cushion Construction 9D-26
Clip Removal and Installation 9D-27
Seat Removal and Installation 9D-27
Seat Lock Cable / Seat Lock Assembly / Striker Support Bracket Removal and Installation 9D-28
Sport Carrier Removal and Installation 9D-29
Frame Front Cover / Frame Cover / Rear Frame Cover (or Side Case Upper Bracket) Removal and Installation 9D-30
Front Fender Removal and Installation 9D-31
Rear Fender (Rear) Removal and Installation .. 9D-31
Rear Fender (Front) Removal and Installation .. 9D-32
Fuel Tank Center Cover Removal and Installation 9D-33
Side Cover Assembly Removal and Installation 9D-33
Side Cover Assembly Disassembly and Reassembly 9D-34
Frame Center Cover Removal and Installation .. 9D-35
Windscreen / Windscreen Cover Removal and Installation 9D-35
Knuckle Cover Removal and Installation 9D-36
Body Cowling Assembly Removal and Installation 9D-36
Body Cowling Disassembly and Reassembly ... 9D-37
Windscreen Brace Removal and Installation 9D-38
Pivot Cover Removal and Installation 9D-39
Battery Holder Removal and Installation 9D-39
Electric Parts Holder Removal and Installation .. 9D-40
Meter Front Panel / Meter Rear Panel Removal and Installation 9D-41
Specifications 9D-42
Tightening Torque Specifications 9D-42
Special Tools and Equipment 9D-42
Recommended Service Material 9D-42

Body Structure 9E-1
Repair Instructions 9E-1
Frame Construction 9E-1
Front Footrest Construction 9E-2
Front Footrest Removal and Installation 9E-3
Pillion Footrest Construction 9E-3
Pillion Footrest Removal and Installation 9E-4
Side-stand Construction 9E-4
Side-stand Removal and Installation 9E-4
Center Stand Construction (If Equipped) 9E-5
Center Stand Removal and Installation (If Equipped) 9E-5
Accessory Bar Construction (If Equipped) 9E-6
Accessory Bar Removal and Installation 9E-7
Specifications 9E-7
Tightening Torque Specifications 9E-7
Special Tools and Equipment 9E-7
Recommended Service Material 9E-7

Precautions

Precautions

Precautions for Electrical System

BENL06L29000001

Refer to "General Precautions" in Section 00 (Page 00-1), "Precautions for Electrical Circuit Service" in Section 00 (Page 00-2) and "Precautions for Circuit Tester" in Section 00 (Page 00-8).

Component Location

Electrical Components Location

BENL06L29003001

Refer to "Electrical Components Location": Service Manual Information in Section 0A (Page 0A-10).

Wiring Systems

General Description

Abbreviations

BENL06L29101001

Refer to the "Abbreviations": Service Manual Information in Section 0A (Page 0A-1) for the general abbreviations.

How to Read System Circuit Diagram

BENL06L29101002

Refer to "Wire Color Symbols": Service Manual Information in Section 0A (Page 0A-4).

How to Read Terminal Nos.

BENL06L29101003

[A]: Twisted wires (Both CAN lines and non-CAN lines)

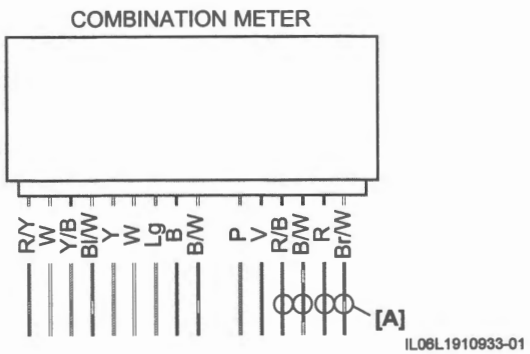

Glossary

BENL06L29101004

English	
2WD/4WD/DIFF-LOCK ACTUATOR	
2WD/4WD/DIFF-LOCK SWITCH	
4WD POSITION DIODE	
ABS	
ABS CONTROL UNIT	
ABS FUSE	
ABS MOTOR	
ABS VALVE	
ACCELERATOR POSITION SENSOR	
ALARM	
AP SENSOR	
AMBIENT AIR TEMP SENSOR	
AUXILIARY HEADLIGHT	
BATTERY	
BRAKE LIGHT SWITCH	
CAP	
CARBURETOR SWITCH	
CDI UNIT	
CKP SENSOR	
CLUTCH LEVER POSITION SWITCH	
CLUTCH SWITCH	
CMP SENSOR	
COMBINATION METER	
CONDENSER	
COOLING FAN MOTOR	
COOLING FAN RELAY	
COOLING FAN THERMO-SWITCH	
DIFFERENTIAL DIODE	
DIFF-LOCK RELAY	
DIMMER	
DIMMER SWITCH	
DIMMER/PASSING LIGHT SWITCH	
DIODE	
DRIVE RELAY (2WD)	
DRIVE RELAY (DIFF-LOCK)	
ECM	
ECT SENSOR	
EMERGENCY SWITCH	
ENGINE STOP SWITCH	
ENGINE STOP/STARTER SWITCH	
EPS CONTROL UNIT	
EPS MOTOR	
ET SENSOR	
EVAP SYSTEM PURGE CONTROL SOLENOID VALVE	
EXCV ACTUATOR	
FAN	
FAN RELAY	
FI INDICATOR LIGHT	
FRONT BRAKE LIGHT SWITCH	
FRONT TURN SIGNAL LIGHT	
FRONT WHEEL SPEED SENSOR	
FUEL	
FUEL INJECTOR	
FUEL LEVEL GAUGE	
FUEL METER	
FUEL PUMP	
FUEL PUMP RELAY	

English	
FUSE BOX	
GEARSHIFT SENSOR	
GENERATOR	
GP SENSOR	
GP SWITCH	
HANDLE SWITCH	
HANDLEBAR SWITCH	
HAZARD SWITCH	
HEADLIGHT	
HEADLIGHT HI	
HEADLIGHT LO	
HI BEAM INDICATOR LIGHT	
HIGH BEAM INDICATOR LIGHT	
HIGH BEAM RELAY	
HIGH POSITION DIODE	
HO2 SENSOR	
HORN	
HORN BUTTON	
HORN SWITCH	
IAP SENSOR	
IAP/TP SENSOR	
IAP/TP/IAT SENSOR	
IAT SENSOR	
IF EQUIPPED	
IGNITER	
IGNITION	
IGNITION COIL	
IGNITION SWITCH	
ILLUMINATION LIGHT	
IMMOBILIZER ANTENNA	
IMU	
INSTRUMENT PANEL LIGHT	
ISC VALVE	
LICENSE PLATE LIGHT	
LIGHTING SWITCH	
LIGHT/HORN RELAY	
LOW BEAM RELAY	
LOW POSITION DIODE	
MAIN	
MAIN FUSE	
MALFUNCTION INDICATOR LAMP	
METER	
MODE SELECT COUPLER	
MODE SWITCH	
NEUTRAL INDICATOR LIGHT	
NEUTRAL POSITION DIODE	
NEUTRAL RELAY	
NEUTRAL SWITCH	
O2 SENSOR	
OIL PRESSURE SWITCH	
OPTION	
OVERRIDE SWITCH	
PASSING LIGHT SWITCH	
PASSING RELAY	
PAIR CONTROL SOLENOID VALVE	
PARK	
PARKING	
PARKING BRAKE RELAY	
PARKING BRAKE SWITCH	

English	
PARKING/REAR BRAKE LIGHT SWITCH	
POSITION LIGHT	
POWER SOURCE	
POWER SOURCE FUSE	
PRIMARY FUEL INJECTOR	
REAR BRAKE LIGHT SWITCH	
REAR COMBINATION LIGHT	
REAR TURN SIGNAL LIGHT	
REAR WHEEL SPEED SENSOR	
REGULATOR/RECTIFIER	
RESISTOR	
SECONDARY FUEL INJECTOR	
SELECT SWITCH	
S-HAC	
SIDE-STAND DIODE	
SIDE-STAND RELAY	
SIDE-STAND SWITCH	
SIGNAL	
SPEED SENSOR	
SPEEDOMETER	
SPEEDOMETER LIGHT	
STARTER BUTTON	
STARTER SUB RELAY	
STARTER SWITCH	
STARTER MOTOR	
STARTER RELAY	
STEERING DAMPER SOLENOID VALVE	
STP SENSOR	
STV ACTUATOR	
SUB	
SUB FUSE	
THROTTLE VALVE MOTOR	
TO SENSOR	
TORQUE SENSOR	
TP SENSOR	
TRACTION CONTROL SYSTEM SWITCH	
TRACTION CONTROL SYSTEM SELECT SWITCH	
TURN SIGNAL INDICATOR LIGHT	
TURN SIGNAL RELAY	
TURN SIGNAL SWITCH	
WITH IMMOBILIZER SYSTEM	
WITHOUT EVAP SYSTEM	
WITHOUT EVAP CONTROL SYSTEM	
WITHOUT EVAP SYSTEM PURGE CONTROL SOLENOID VALVE	
WITHOUT IMMOBILIZER SYSTEM	
WITHOUT POSITION LIGHT	

Schematic and Routing Diagram

Wiring Diagram (DL1050RQ)

BENL06L29102001

Wire Color Symbols

Symbol	Wire Color	Symbol	Wire Color
B	Black	Lbl	Light blue
Be	Beige	Lg	Light green
Bl	Blue	O	Orange
Br	Brown	P	Pink
Dbr	Dark brown	R	Red
Dg	Dark green	V	Violet
G	Green	W	White
Gr	Gray	Y	Yellow

There are two kinds of colored wire used in this vehicle. One is single-colored wire and the other is dual-colored (striped) wire.
The single-colored wire uses only one color symbol (i.e. G). The dual-colored wire uses two color symbols (i.e. G/Y). The first symbol represents the base color of the wire and the second symbol represents the color of the stripe.

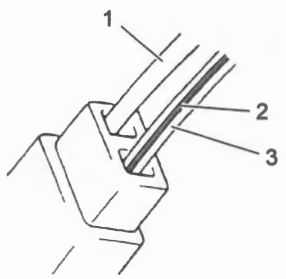

ID26J1010224-02

1. G (Base color)	3. G (Base Color)
2. Y (Stripe color)	

Option Coupler Location

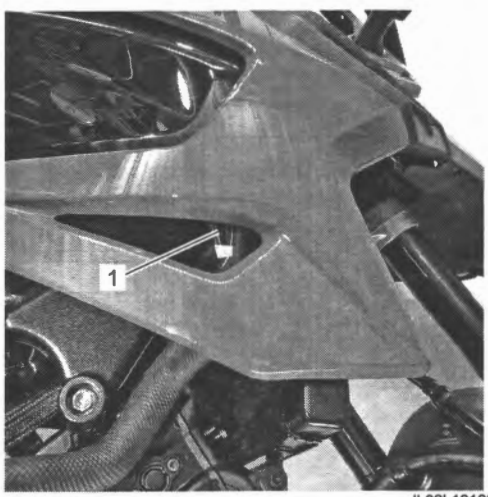

IL06L1910902-02

1. Option coupler (Grip heater and fog light)



IL06L1910903-02

1. Option couplers (Alarm)
2. Option coupler (Power source socket)

Wiring Diagram

General view

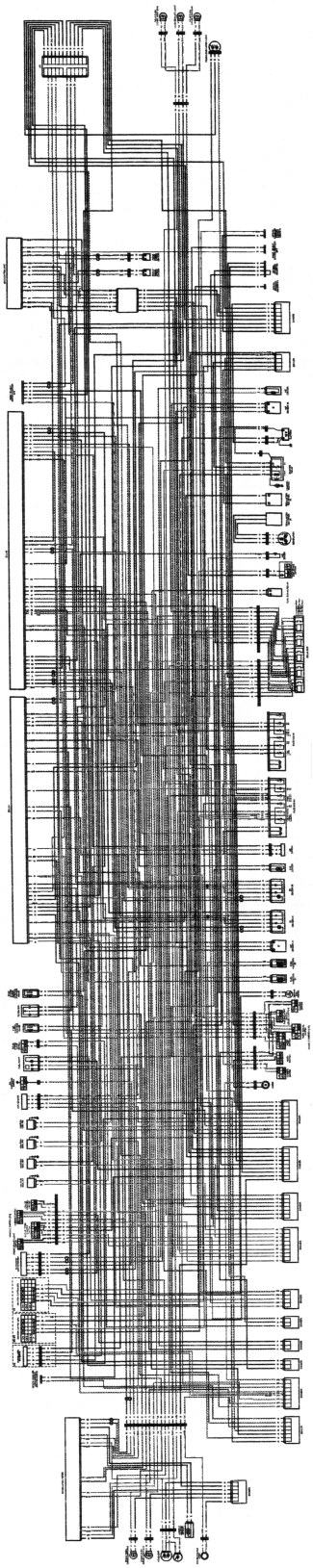

IL06L1910937-03

[A]: With immobilizer control system	[C]: Without immobilizer control system (For E.U.)
[B]: Without immobilizer control system (Except for E.U.)	

1/7

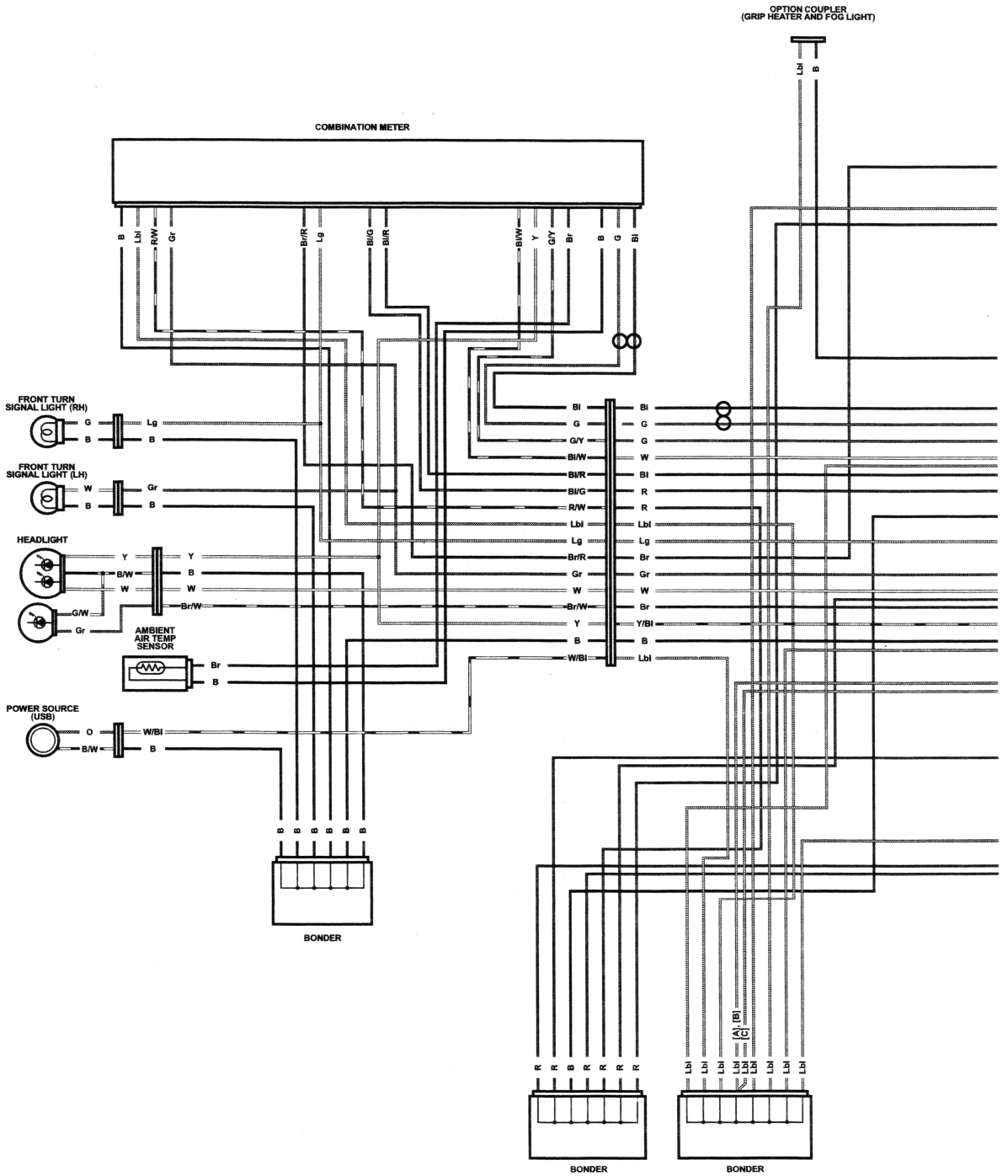

IL06L1910905-07

[A]: With immobilizer control system	[C]: Without immobilizer control system (For E.U.)
[B]: Without immobilizer control system (Except for E.U.)	

2/7

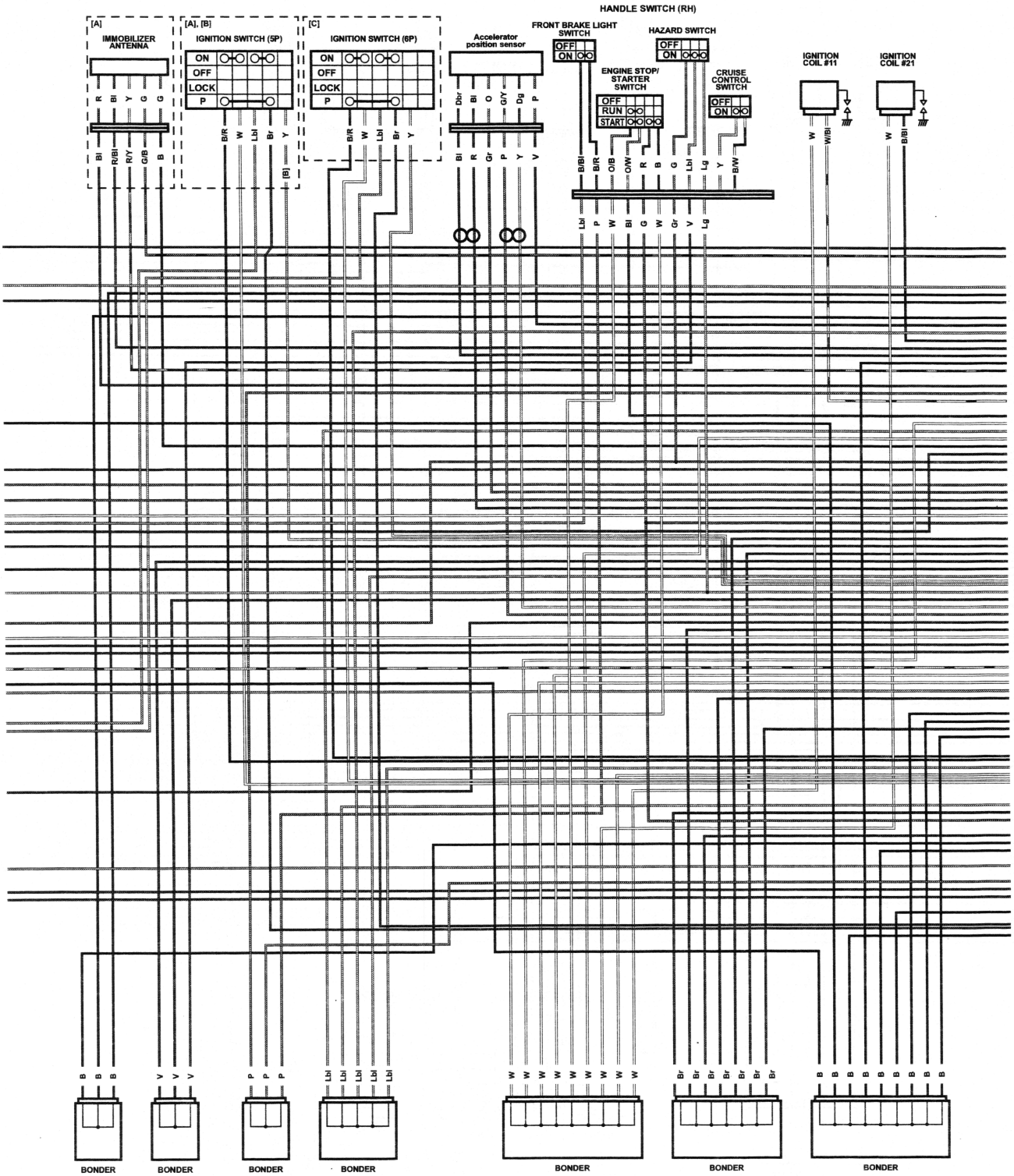

IL06L1910906-11

[A]: With immobilizer control system	[C]: Without immobilizer control system (For E.U.)
[B]: Without immobilizer control system (Except for E.U.)	

3/7

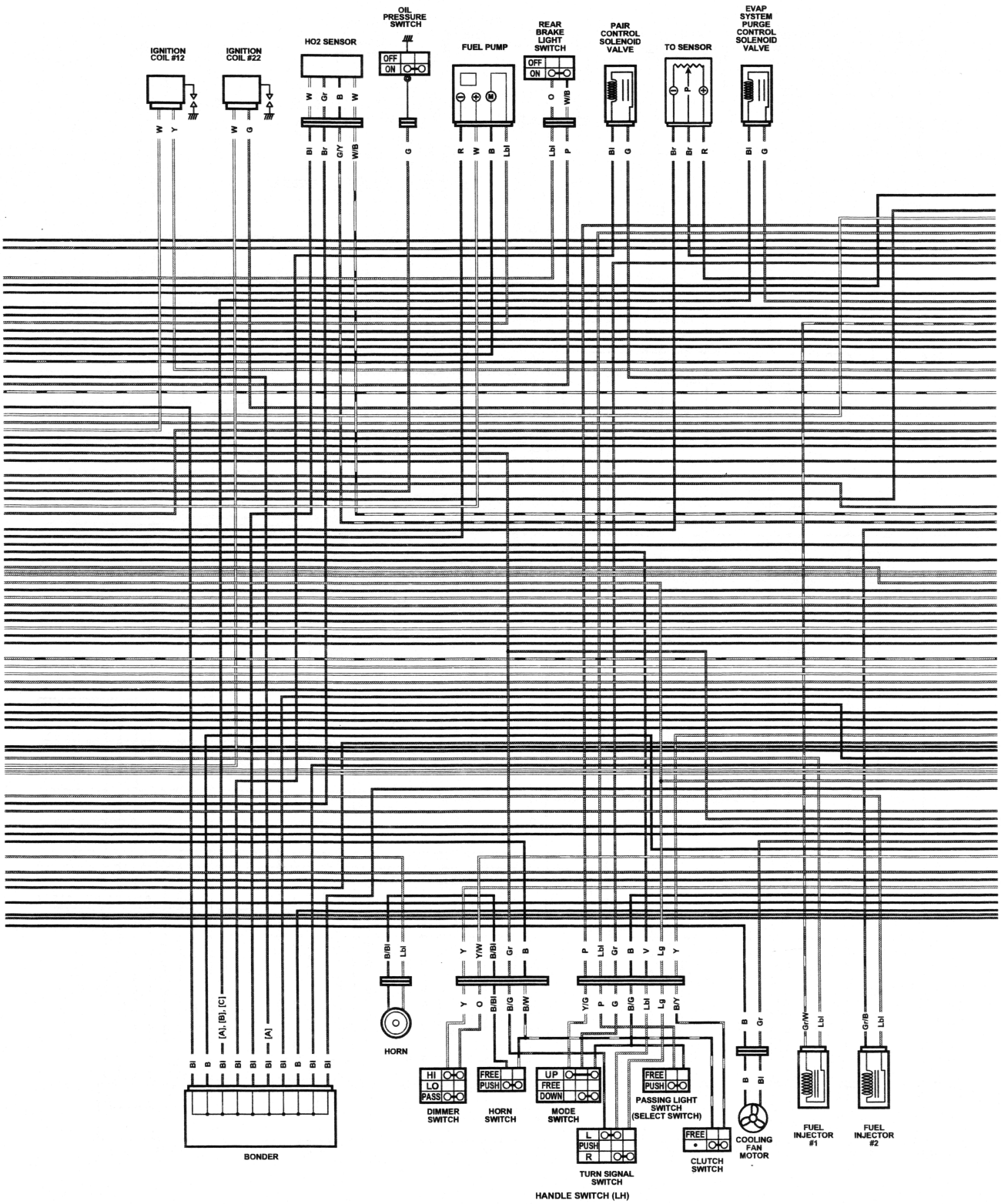

IL06L1910934-05

[A]: With immobilizer control system	[C]: Without immobilizer control system (For E.U.)
[B]: Without immobilizer control system (Except for E.U.)	

4/7

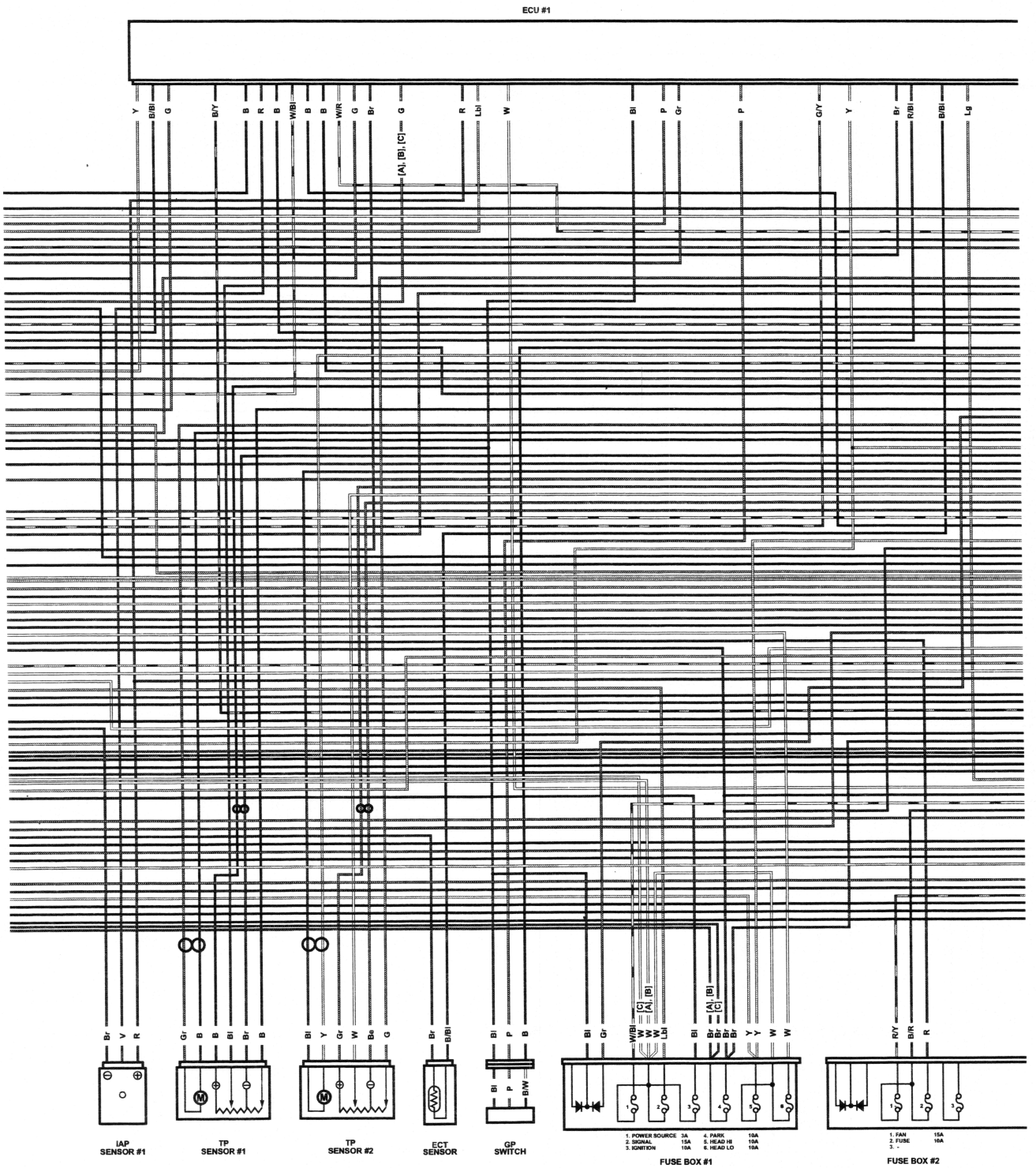

IL06L1910908-07

[A]: With immobilizer control system	[C]: Without immobilizer control system (For E.U.)
[B]: Without immobilizer control system (Except for E.U.)	

5/7

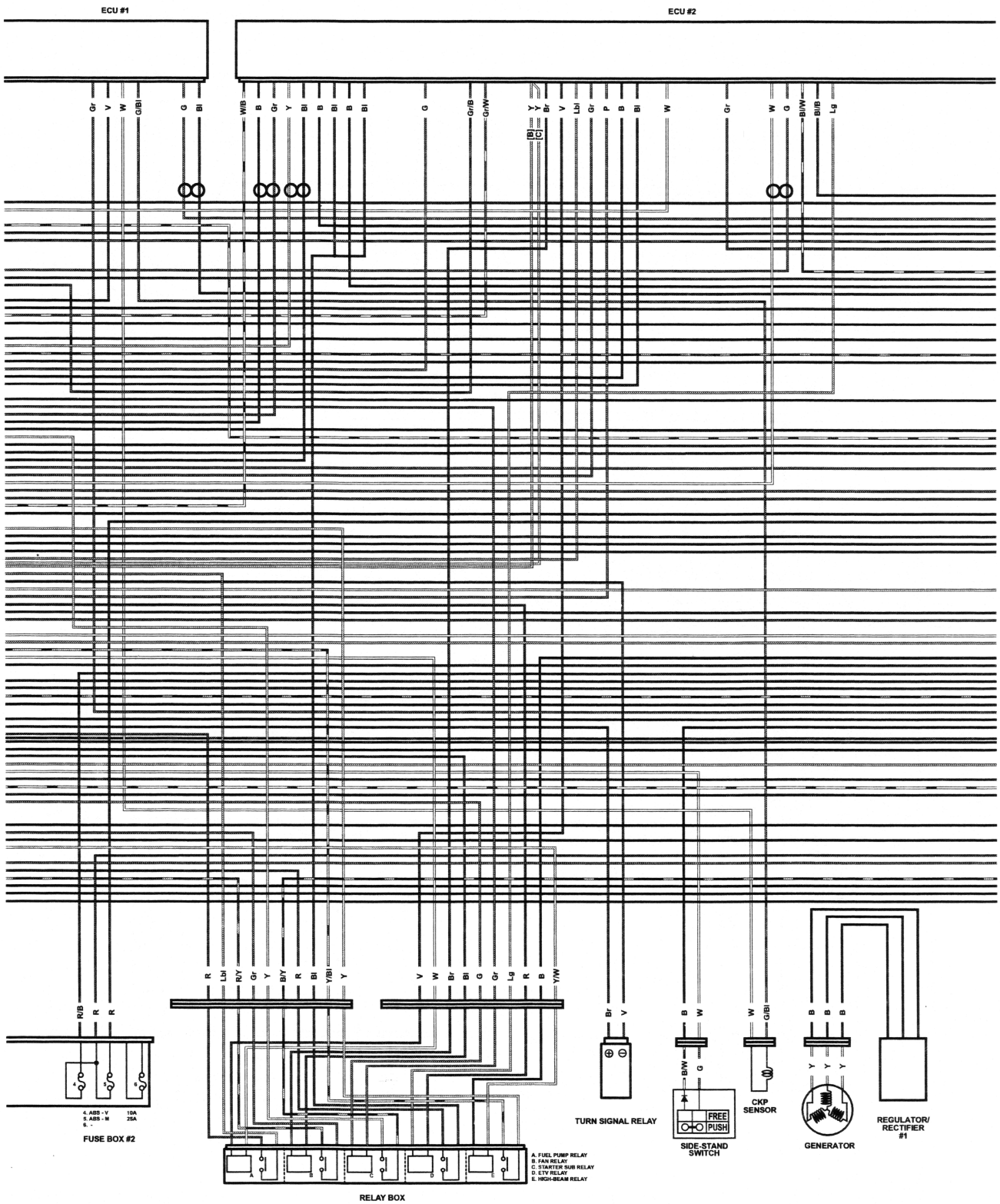

IL06L1910909-07

[A]: With immobilizer control system	[C]: Without immobilizer control system (For E.U.)
[B]: Without immobilizer control system (Except for E.U.)	

6/7

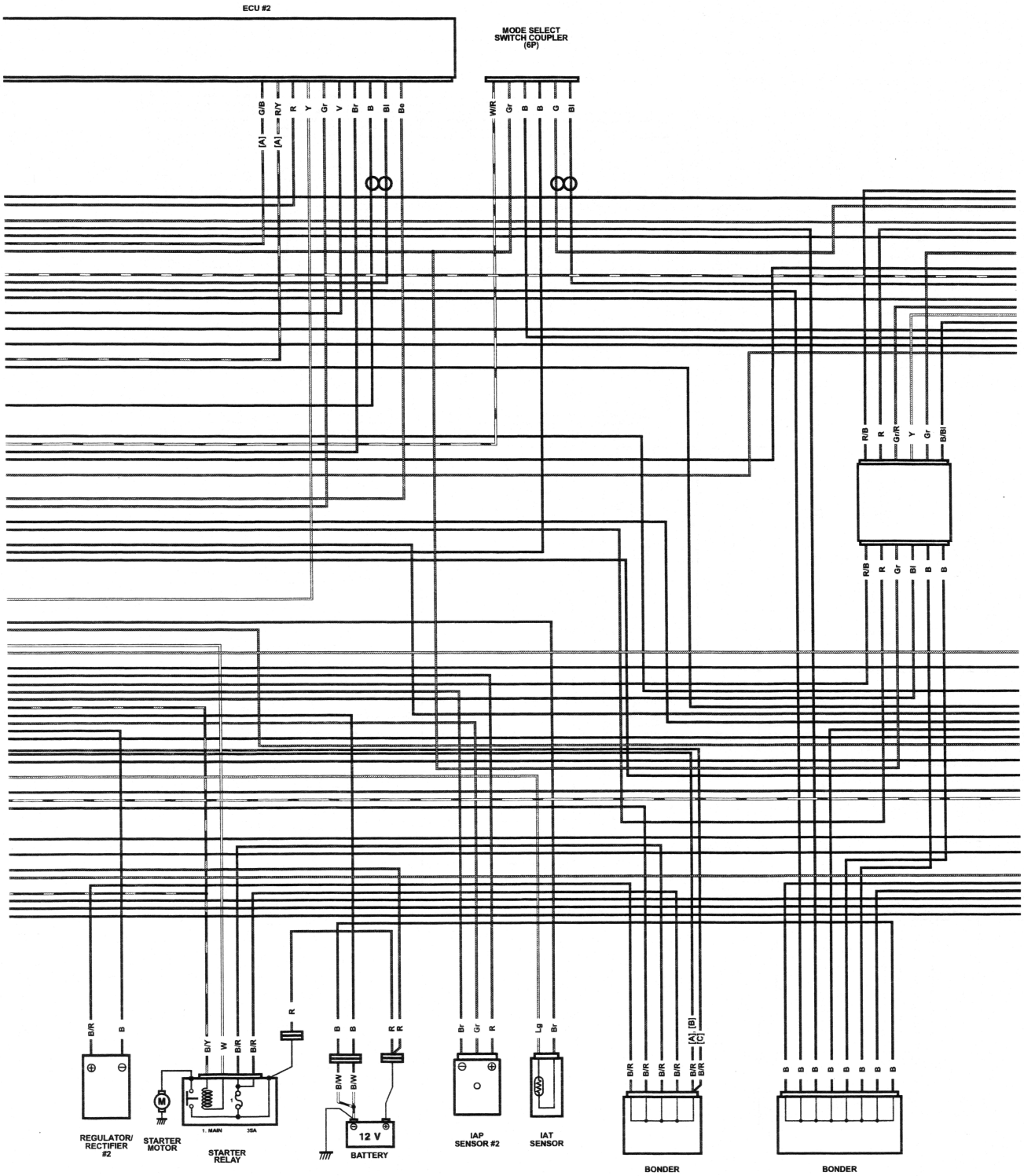

IL06L1910910-07

[A]: With immobilizer control system	[C]: Without immobilizer control system (For E.U.)
[B]: Without immobilizer control system (Except for E.U.)	

7/7

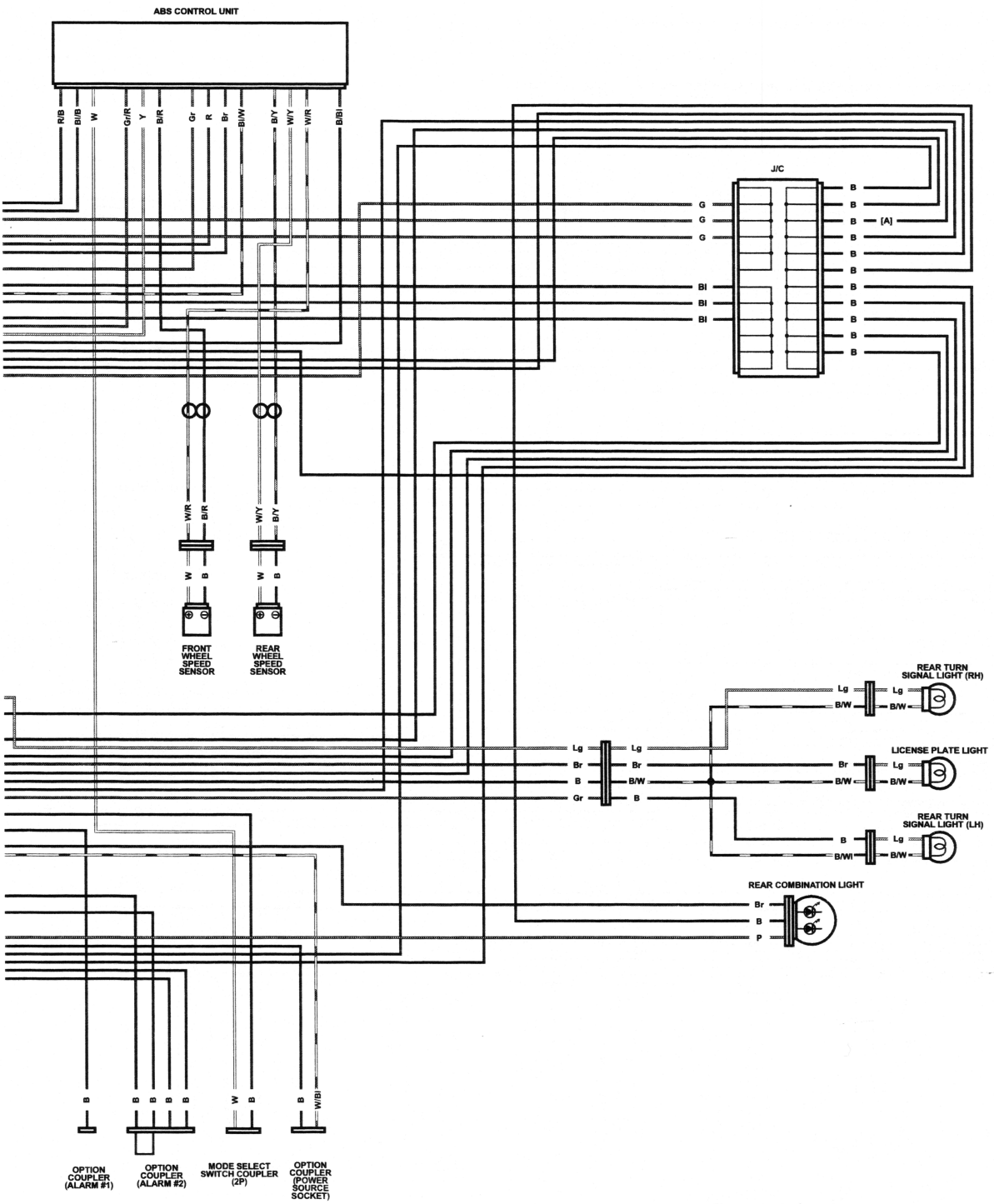

IL06L1910911-07

[A]: With immobilizer control system	[C]: Without immobilizer control system (For E.U.)
[B]: Without immobilizer control system (Except for E.U.)	

Wiring Diagram (DL1050RC)

BENL06L29102002

Wire Color Symbols

Symbol	Wire Color	Symbol	Wire Color
B	Black	Lbl	Light blue
Be	Beige	Lg	Light green
Bl	Blue	O	Orange
Br	Brown	P	Pink
Dbr	Dark brown	R	Red
Dg	Dark green	V	Violet
G	Green	W	White
Gr	Gray	Y	Yellow

There are two kinds of colored wire used in this vehicle. One is single-colored wire and the other is dual-colored (striped) wire.
The single-colored wire uses only one color symbol (i.e. G). The dual-colored wire uses two color symbols (i.e. G/Y). The first symbol represents the base color of the wire and the second symbol represents the color of the stripe.

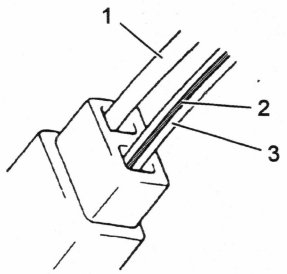

ID26J1010224-02

1. G (Base color)	3. G (Base Color)
2. Y (Stripe color)	

Option Coupler Location

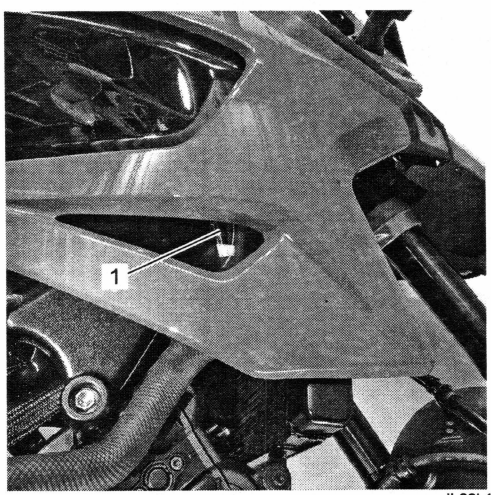

IL06L1910902-02

1. Option coupler (Grip heater)

Wiring Diagram

General view

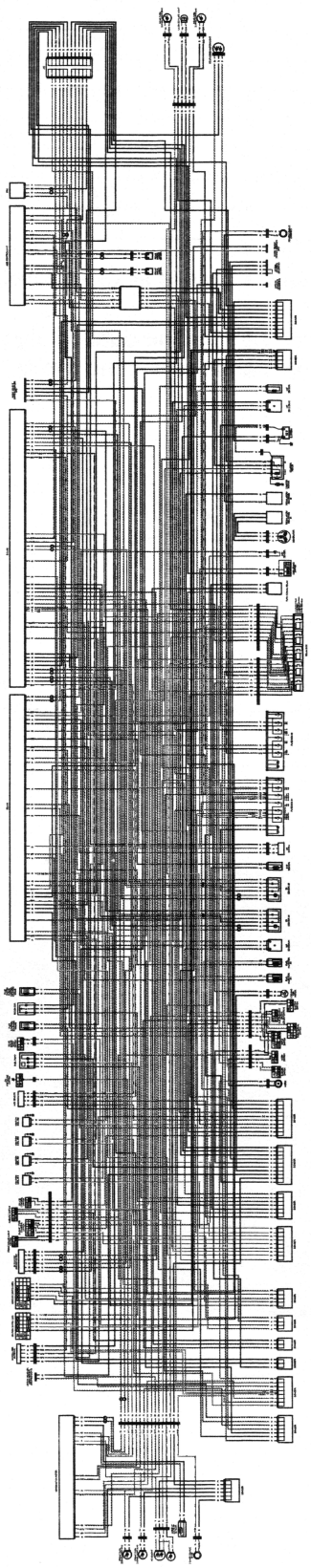

IL06L1910938-04

[A]: With immobilizer control system	[C]: Without immobilizer control system (For E.U.)
[B]: Without immobilizer control system (Except for E.U.)	

1/7

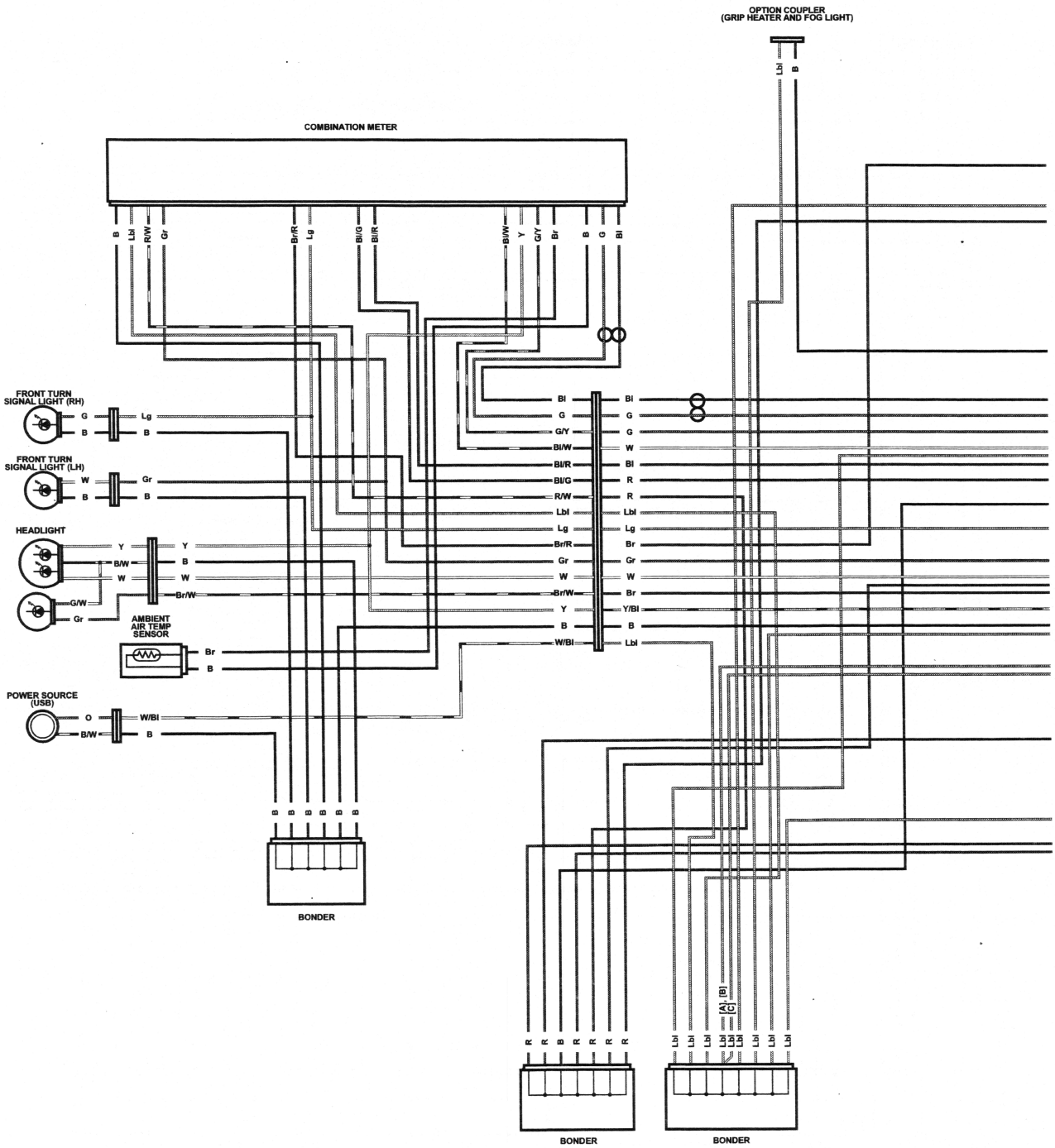

IL06L1910913-06

[A]: With immobilizer control system	[C]: Without immobilizer control system (For E.U.)
[B]: Without immobilizer control system (Except for E.U.)	

2/7

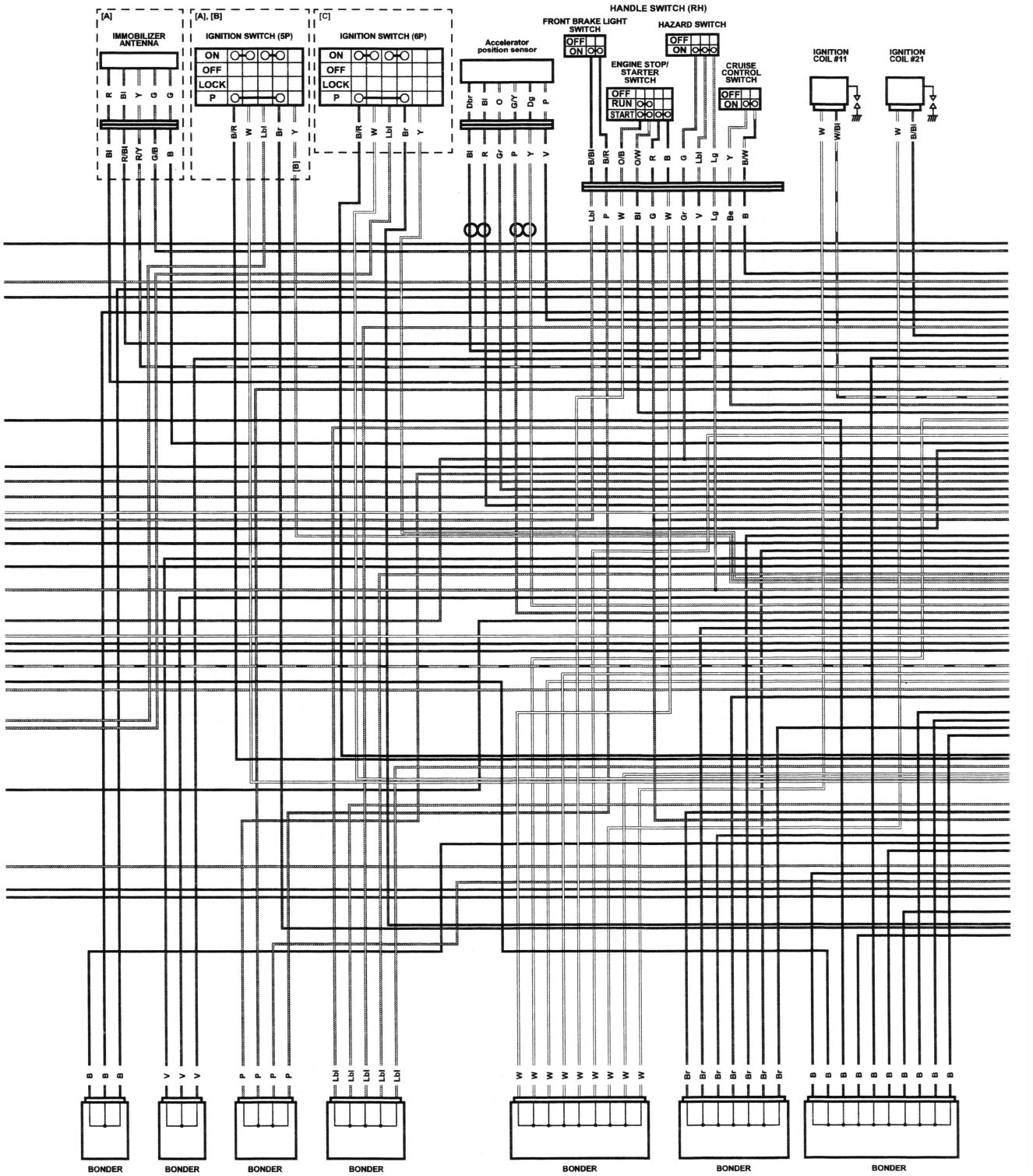

IL06L1910914-05

[A]: With immobilizer control system	[C]: Without immobilizer control system (For E.U.)
[B]: Without immobilizer control system (Except for E.U.)	

3/7

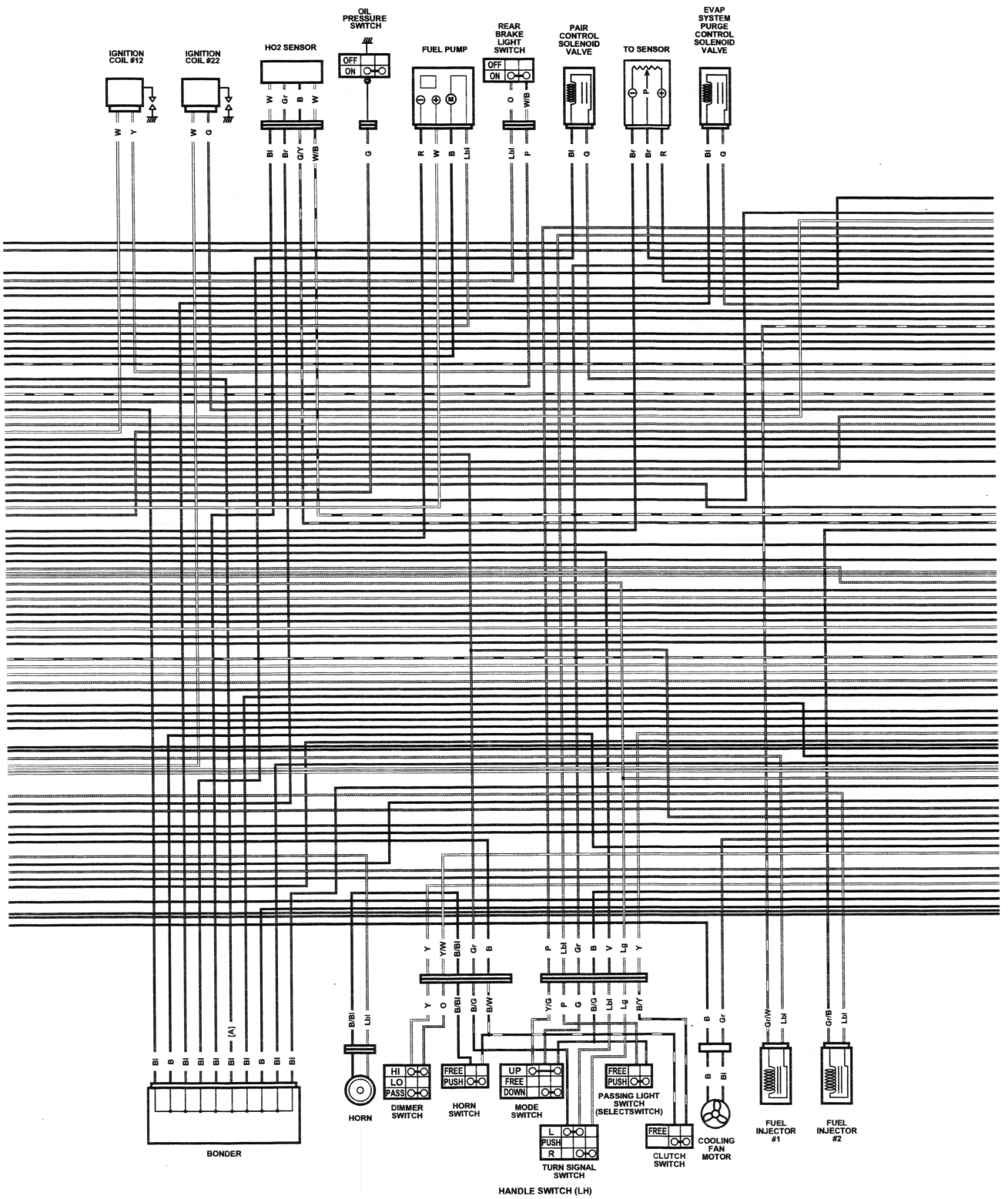

IL06L1910915-05

[A]: With immobilizer control system	[C]: Without immobilizer control system (For E.U.)
[B]: Without immobilizer control system (Except for E.U.)	

4/7

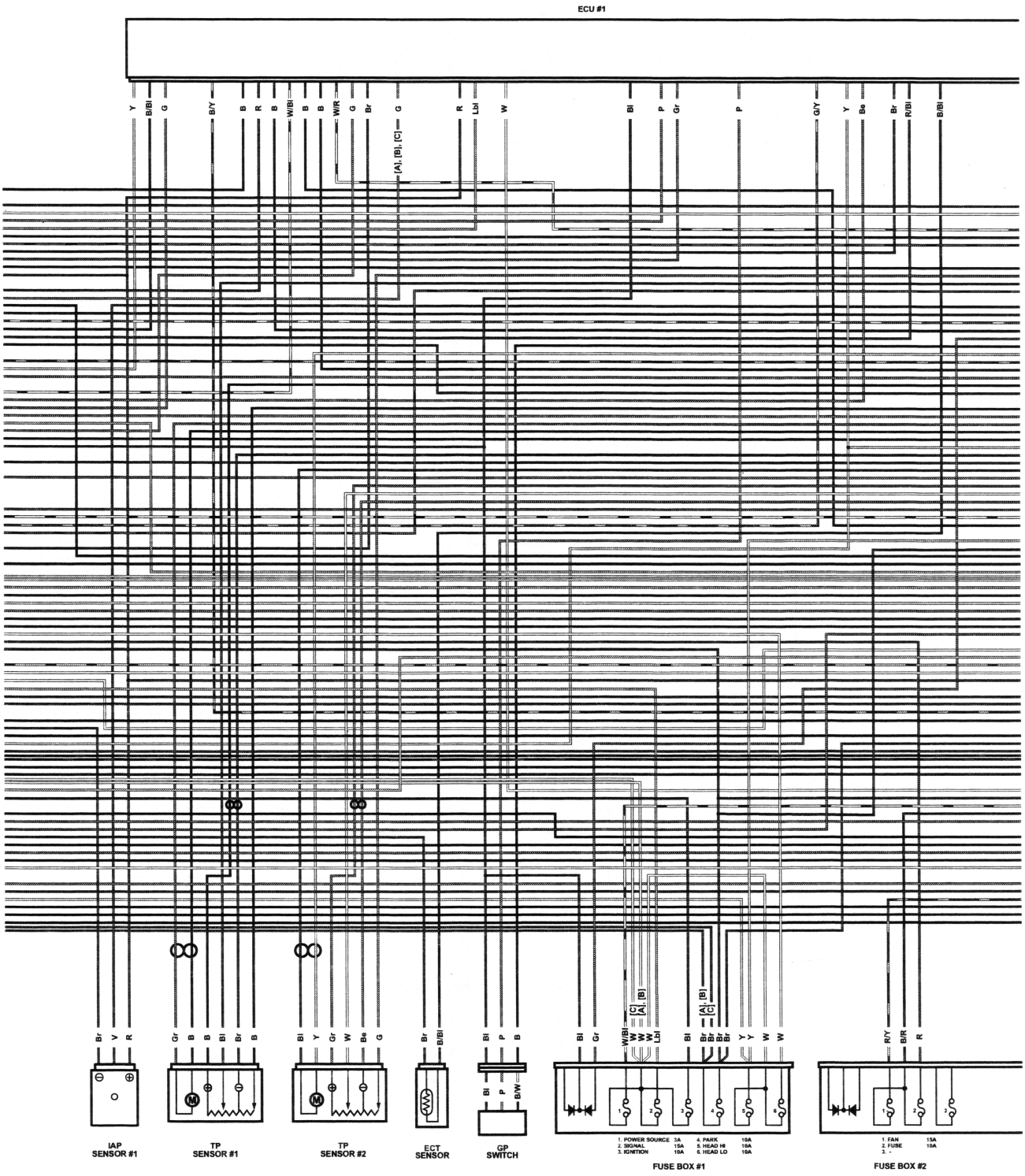

IL06L1910916-06

[A]: With immobilizer control system	[C]: Without immobilizer control system (For E.U.)
[B]: Without immobilizer control system (Except for E.U.)	

5/7

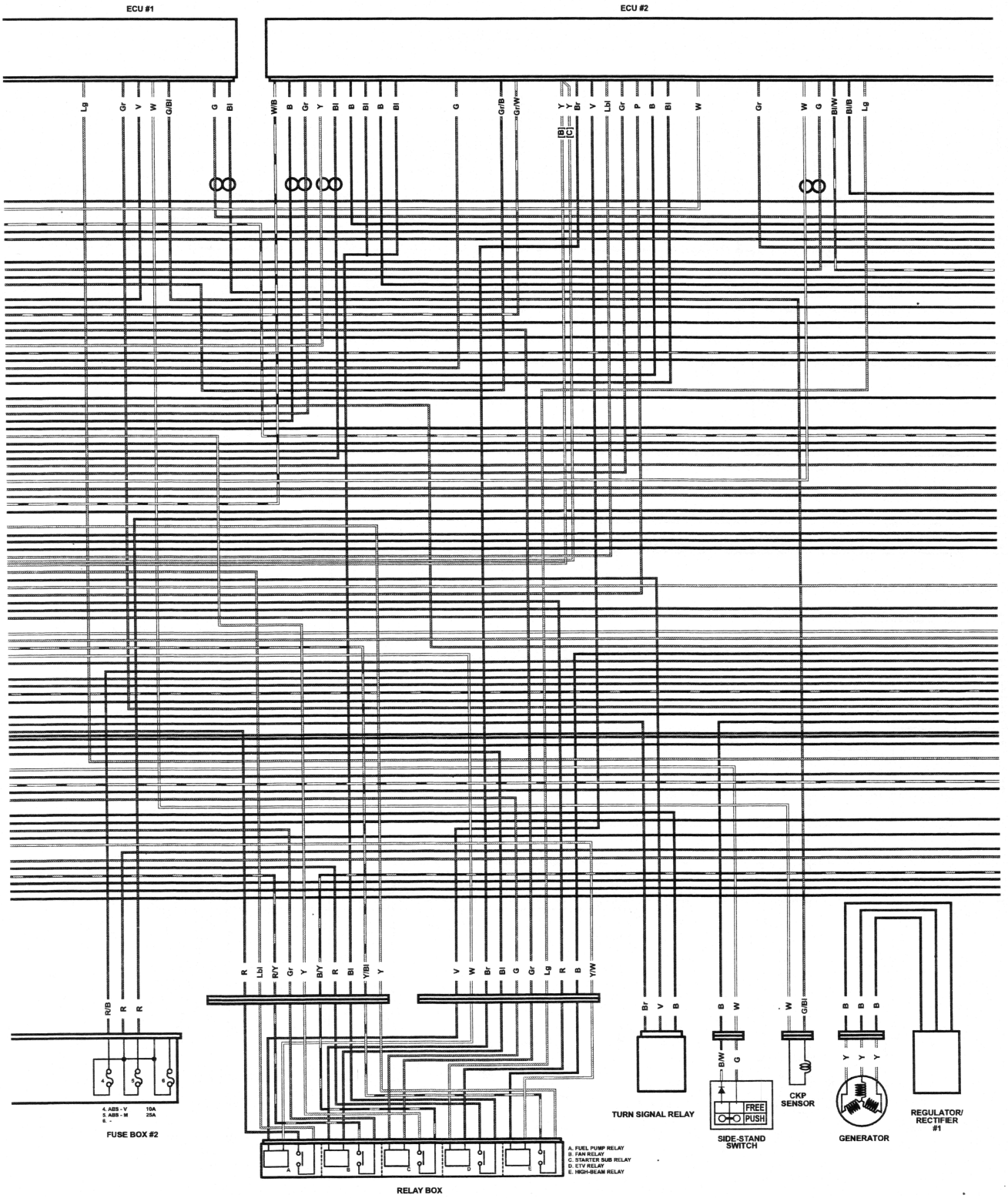

IL06L1910917-05

[A]: With immobilizer control system	[C]: Without immobilizer control system (For E.U.)
[B]: Without immobilizer control system (Except for E.U.)	

6/7

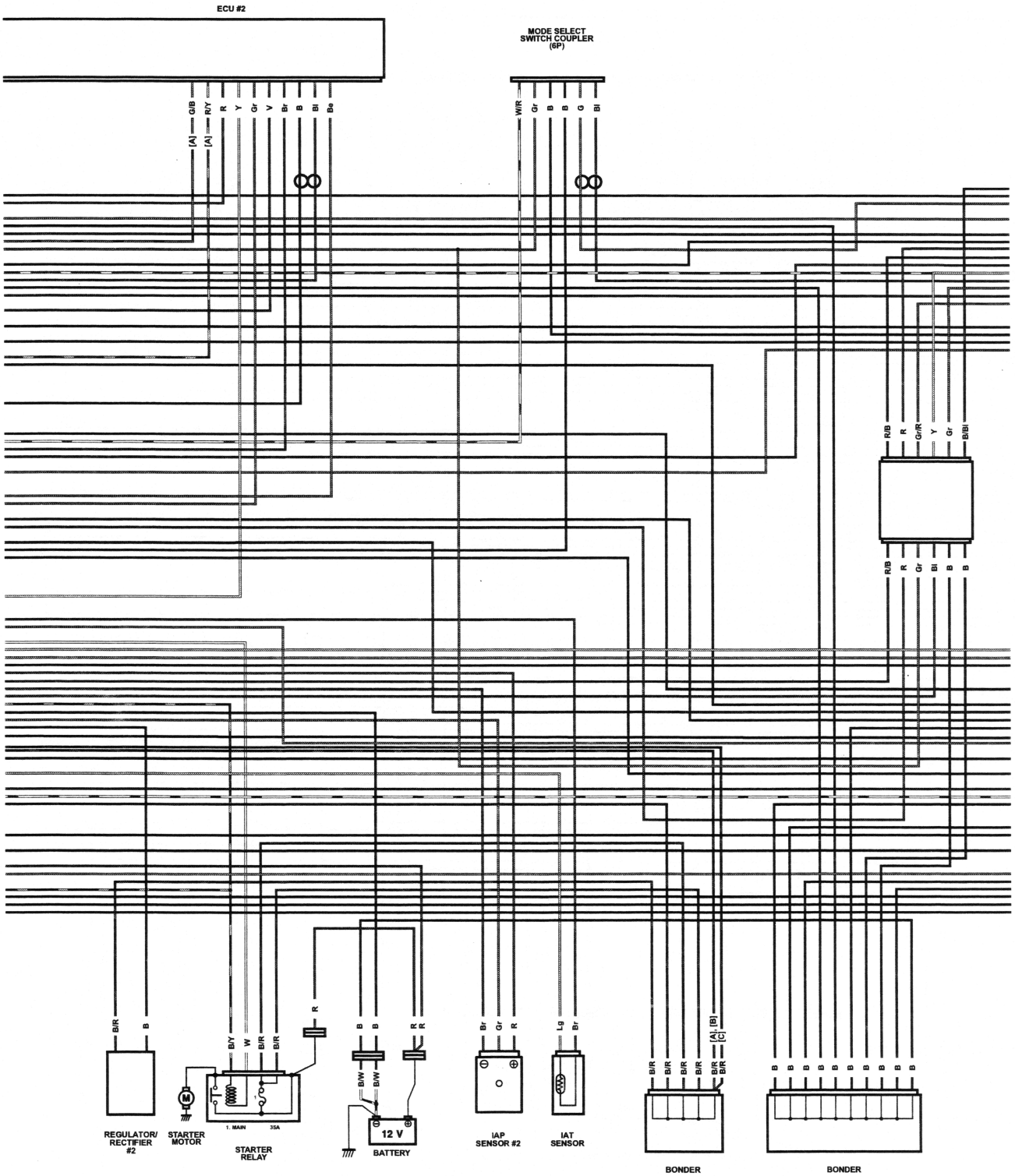

IL06L1910918-05

[A]: With immobilizer control system	[C]: Without immobilizer control system (For E.U.)
[B]: Without immobilizer control system (Except for E.U.)	

7/7

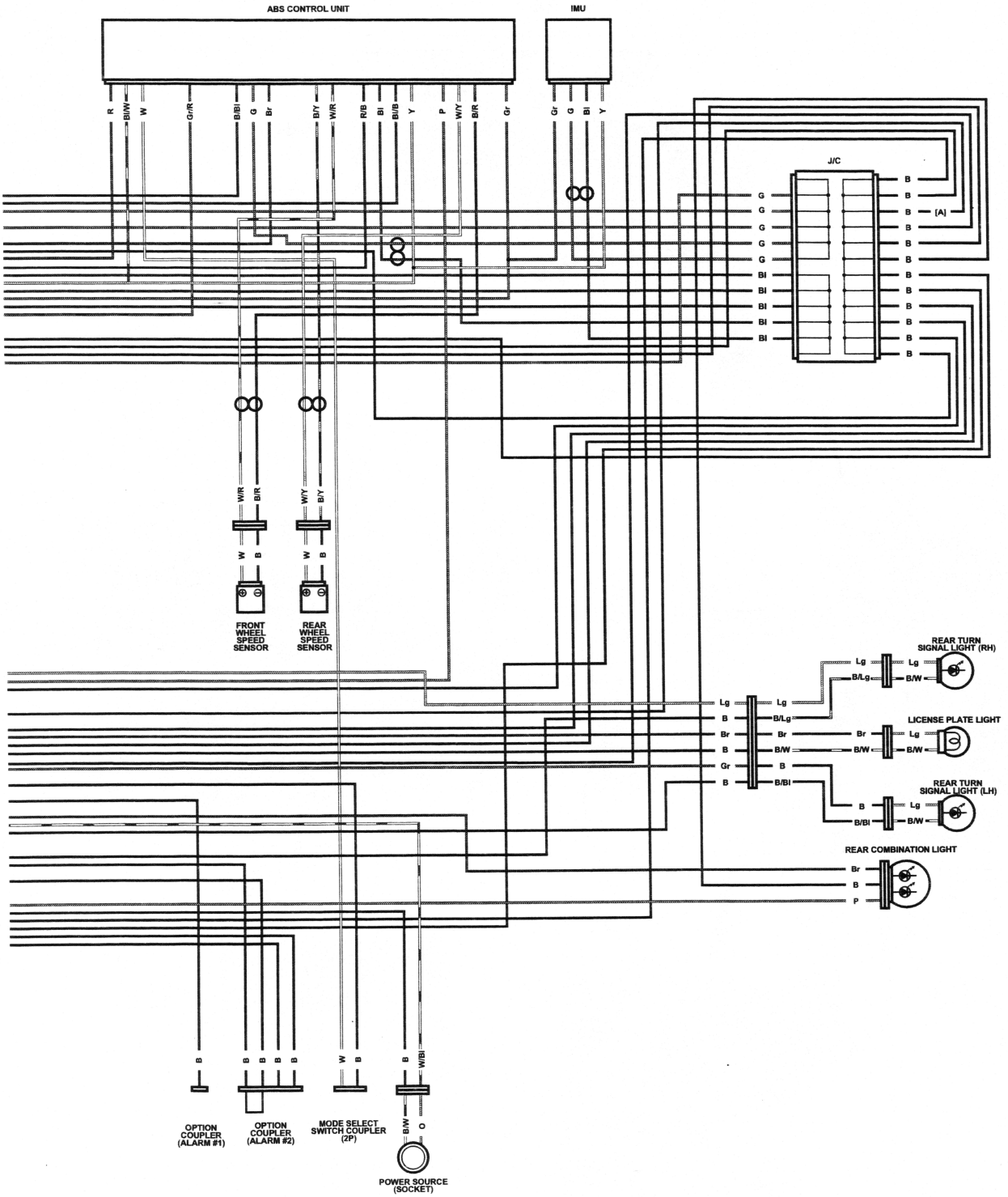

IL06L1910919-05

[A]: With immobilizer control system	[C]: Without immobilizer control system (For E.U.)
[B]: Without immobilizer control system (Except for E.U.)	

Wiring Harness Routing Diagram

BENL06L29102003

Main harness

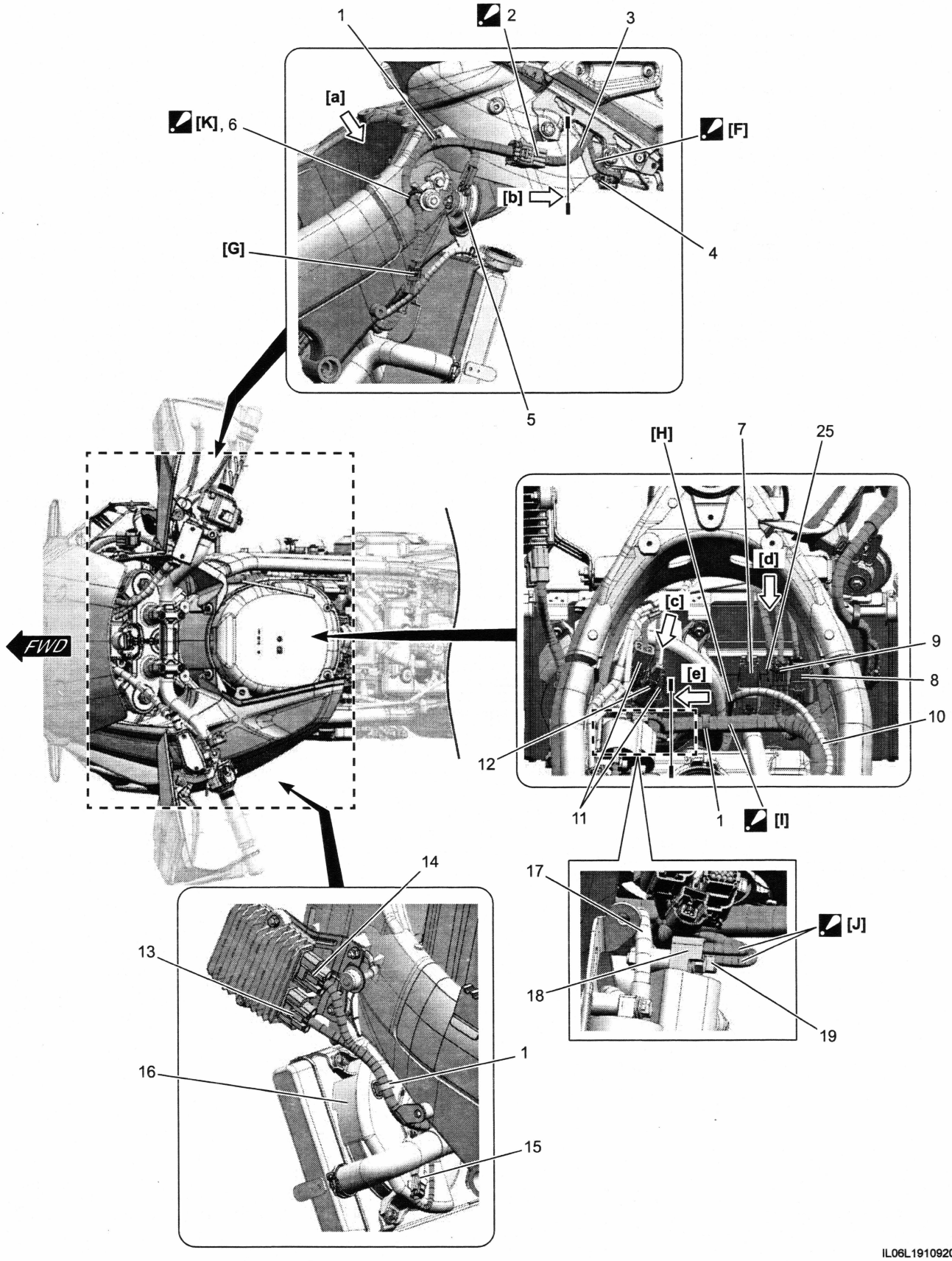

IL06L1910920-02

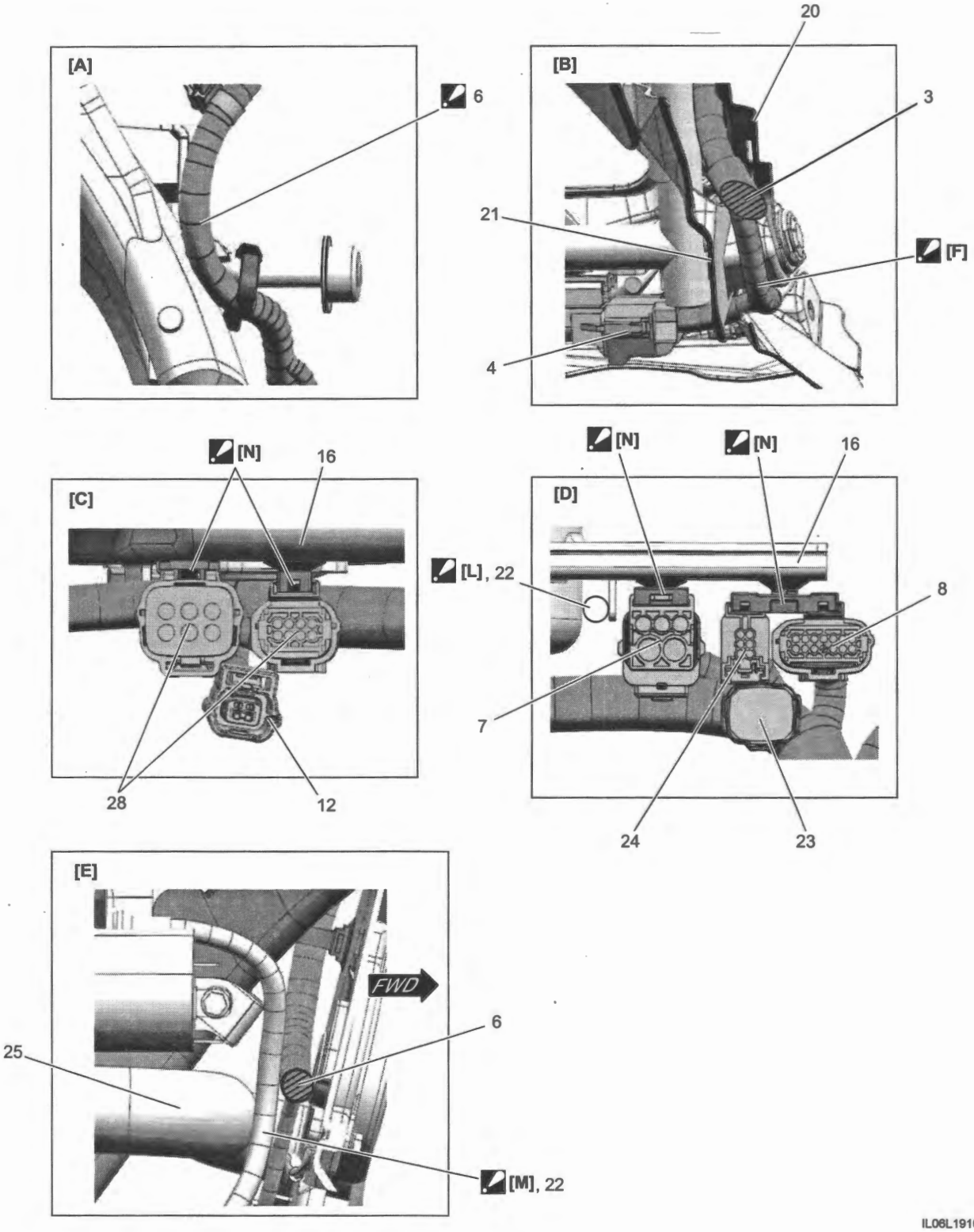

IL06L1910921-02

[A]: View [a]	6. Main harness
[B]: View [b]	7. Ignition switch coupler
[C]: View [c]	8. Handle switch (RH) coupler
[D]: View [d]	9. Immobilizer (if equipped)
[E]: View [e]	10. High tension cord
[F]: Pass the ambient air temperature sensor lead wire through the back side of side inner upper cover.	11. Handle switch (LH) couplers
[G]: To grip heater coupler and /or fog light.	12. Front wheel speed sensor coupler
[H]: Pass the high tension cord through the left side of ignition switch coupler.	13. Regulator / rectifier #1 coupler (Color: Gray)
[I]: Pass the harness under the high tension cord.	14. Regulator / rectifier #2 coupler (Color: Black)
[J]: Direction of wires is to the right.	15. Cooling fan motor coupler
[K]: Clamp the main harness at the blue tape position. Approach the clamp to the frame. Cut off the tip of the clamp leaving 0 – 3 mm (0 – 0.1 in).	16. Radiator fan cover
[L]: Pass the high tension cord through the left side of rib.	17. High tension cord
[M]: Pass the high tension cord through the front side of radiator inlet hose.	18. Ignition coil connector #21 (Color: White)
[N]: Put the coupler on the radiator fan cover.	19. Ignition coil connector #21 (Color: Blue)
1. Insert clamp	20. Body cowling
2. Sub harness coupler : Put the coupler on side inner upper cover.	21. Side inner upper cover
3. Sub harness	22. High tension cord
4. Ambient air temperature sensor	23. Immobilizer coupler (if equipped)
5. Horn	24. Accelerator position sensor coupler
6. Main harness	25. Radiator inlet hose
7. Ignition switch coupler	

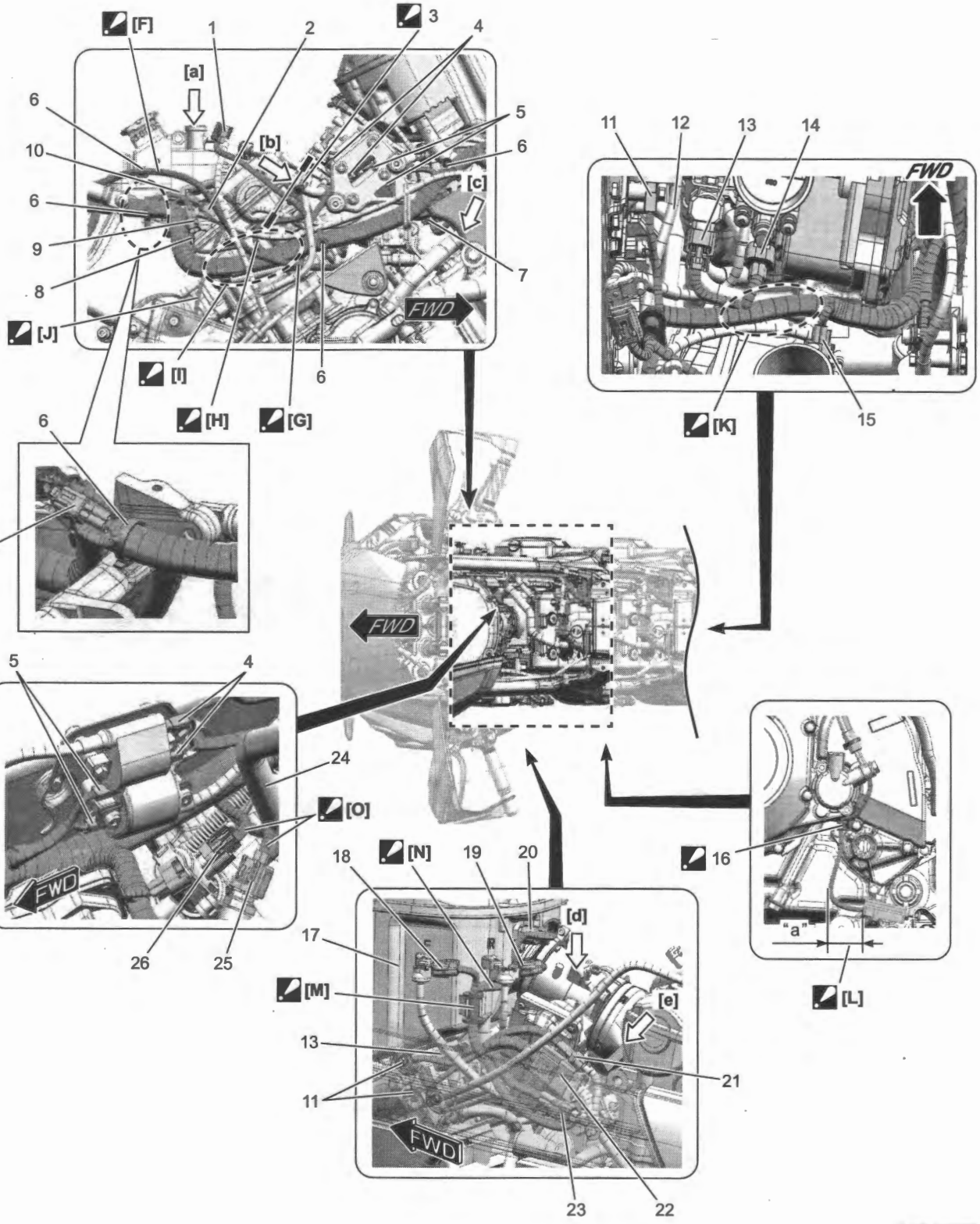

IL06L1910922-02

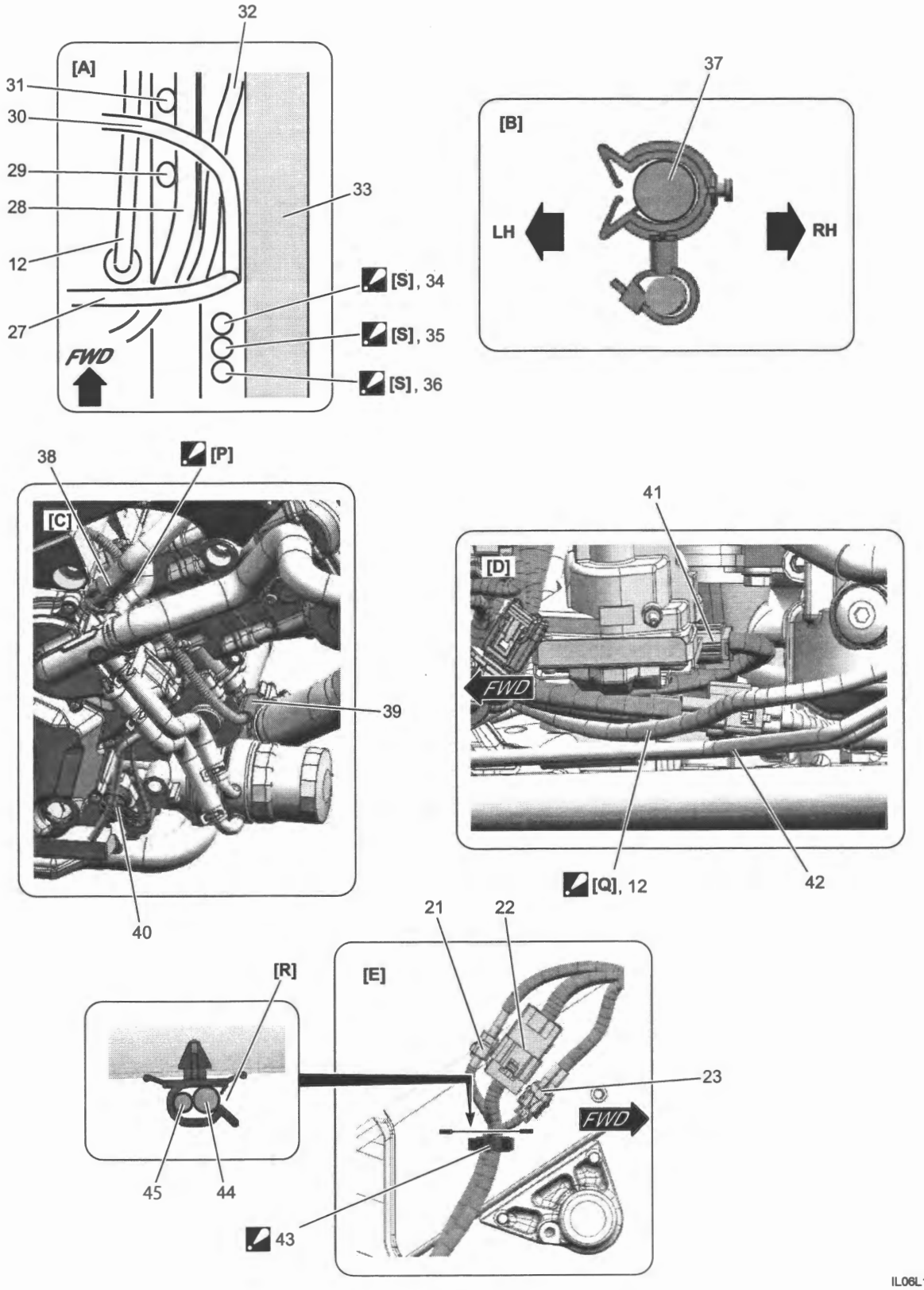

IL06L1910923-02

[A]: View [a]	15. Harness coupler (Injector #2)
[B]: View [b]	16. Clamp : Clamp the side-stand switch lead wire toward inside of the vehicle. Face the locked part of clamp to inside. Cut off the excess tip of the clamp.
[C]: View [c]	17. Air cleaner box
[D]: View [d]	18. Harness coupler (IAP sensor #1)
[E]: View [e]	19. Harness coupler (IAP sensor #2)
[F]: Pass the starter motor lead through right side of the fuel tank bracket.	20. Harness coupler (IAT sensor)
[G]: Pass the starter motor lead through left side of the reservoir tank over flow hose and reservoir tank inlet hose.	21. Harness coupler (CKP sensor)
[H]: Pass the fuel pump lead through left side of reservoir tank overflow hose.	22. Harness coupler (Generator)
[I]: Pass the following lead wire and hose between harness and frame. • HO2 sensor • Rear brake light switch • GP sensor • Starter motor lead • Fuel tank drain hose • Reservoir tank overflow hose	23. Harness coupler (Side stand switch)
[J]: Make sure that the rear brake light switch is not loose.	24. Pair control solenoid valve hose
[K]: Pass the harness between the front and rear throttle body. Pass the harness through front side of IAP sensor #2.	25. Harness coupler (ECT sensor)
[L]: The curve portion of side stand switch lead wire must be within 50mm (1.97 in) from the switch.	26. Harness coupler (Pair control solenoid valve)
[M]: Set the "H" rubber to the guide.	27. Reservoir tank overflow hose
[N]: Pass the IAP sensor #2 lead wire through front side of the IAP sensor #2 hose.	28. Reservoir tank inlet hose
[O]: Pass the pair control solenoid valve lead wire and ECT sensor lead wire through front side of the hose.	29. Fuel pomp lead wire
[P]: Pass the starter motor lead wire under the water bypass hose.	30. Fuel tank water drain hose
[Q]: Pass the high tension cord between harness and front brake hose.	31. Ignition coil lead wire
[R]: Face the opening of clamp forward.	32. Starter motor lead wire
[S]: HO2 sensor lead wire, rear brake light switch lead wire and GP sensor lead wire are in random order.	33. Frame
1. Harness coupler (Fuel pump)	34. HO2 sensor lead wire
2. Rear brake light switch coupler	35. Rear brake light switch lead wire
3. Insert clamp : Clamp the fuel pump lead with bend section of the fuel hose.	36. GP sensor lead wire
4. Ignition coil terminal #11	37. Fuel feed hose
5. Ignition coil terminal #22	38. Water bypass hose
6. Insert clamp	39. Harness coupler (Starter motor lead wire)
7. Harness coupler (TPS #1)	40. Oil pressure switch
8. Oil pressure switch	41. Harness coupler (TPS #2)
9. Harness coupler (GP switch)	42. Front brake hose
10. Harness coupler (HO2 sensor)	43. Insert clamp : Clamp the side-stand switch lead wire, and generator lead wire at the white tape position. Insert the clamp to the frame.
11. Ignition coil terminal #12	44. Generator lead wire
12. High tension cord	45. Side-stand switch lead wire
13. Harness coupler (EVAP system purge control solenoid valve)	"a": 0 – 50 mm (0 – 1.97 in)
14. Harness coupler (Injector #1)	

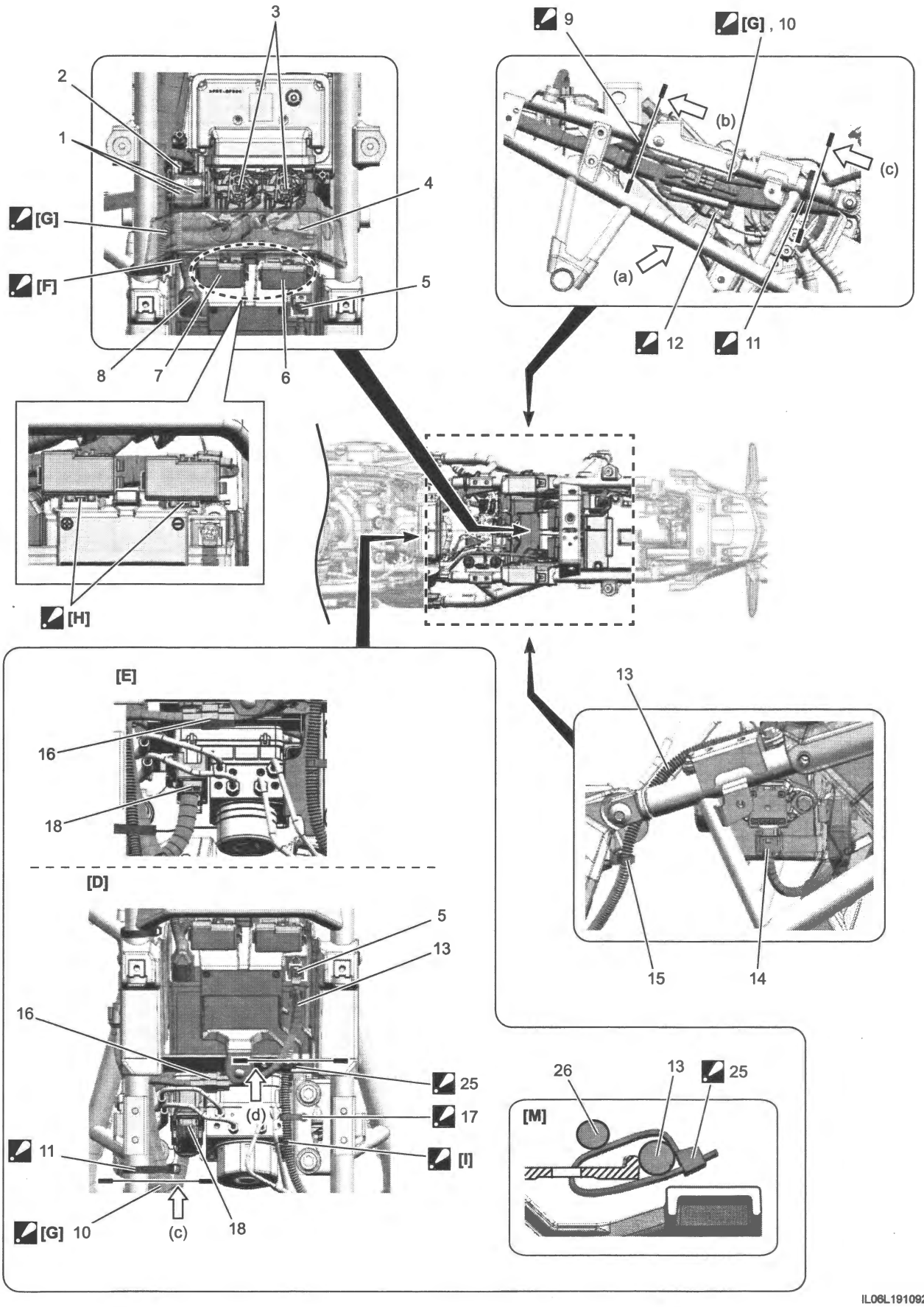
3
2
1
4
[G]
[F]
5
8
7
6
[H]
9
[G] , 10
(b)
(c)
(a)
12
11
[E]
16
18
[D]
5
13
16
25
(d)
17
11
[I]
[G] 10
(c)
18
13
15
14
26
13
25
[M]
IL06L1910924-02

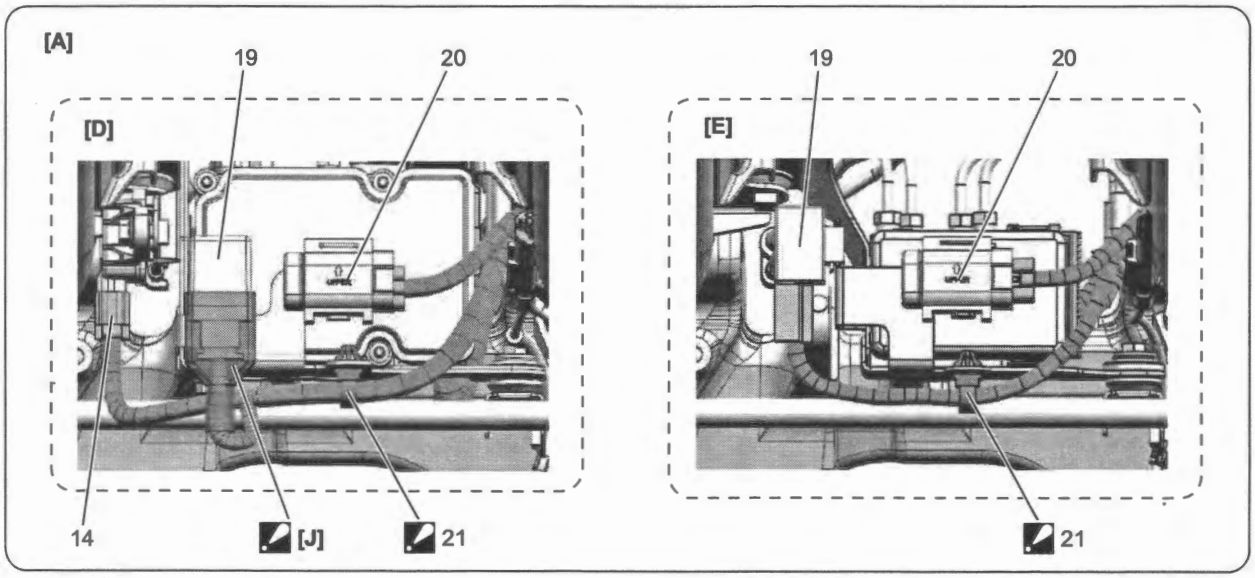

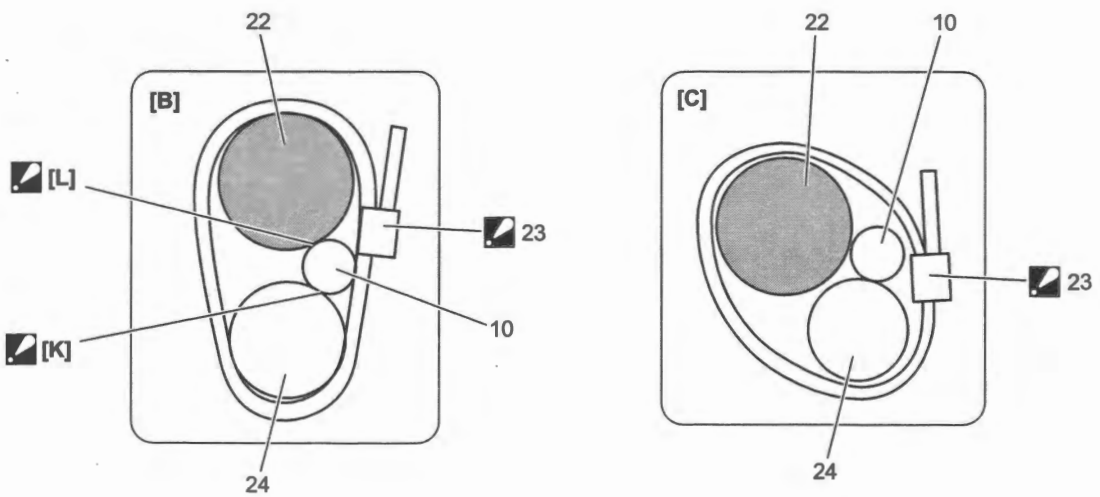

IL06L1910925-02

[A]: View [a]	8. Battery plus terminal
[B]: View [b]	9. Clamp : Clamp the harness and starter motor lead wire.
[C]: View [c]	10. Starter motor lead wire
[D]: DL1050RC	11. Clamp : Clamp the harness and starter motor lead wire at the blue tape position.
[E]: DL1050RQ	12. Rear wheel speed sensor : Set the clamp of rear wheel speed sensor
[F]: Pass the battery lead wire upper the starter motor lead wire and ECU lead wire.	13. Battery minus lead wire
[G]: Pass the starter motor lead wire upper the harness.	14. Harness coupler (IMU)
[H]: Set the fuse boxes to the battery holder lid.	15. Insert clamp
[I]: Pass the battery minus lead wire through right side of the ABS control unit/HU mounting bolts.	16. Harness coupler (to battery minus lead wire)
[J]: Set the boot to the turn signal relay.	17. Insert clamp : Clamp the battery minus lead wire
[K]: There is no clearance between the harness and starter motor lead wire.	18. Harness coupler (ABS control unit/HU)
[L]: There is no clearance between the frame and starter motor lead wire.	19. Harness coupler (Turn signal relay)
[M]: View [d]	20. TO sensor
1. Starter relay terminals	21. Insert clamp : Insert the clamp from the bottom side.
2. Harness coupler (Starter relay)	22. Frame
3. Harness couplers (ECU)	23. Clamp : Face the locked part of clamp to left side. Face the tip of clamp upward.
4. Mode select coupler (2P)	24. Main harness
5. Battery minus terminal	25. Clamp : Clamp the battery minus lead wire at the white tape position. Clamp the wire left side of battery holder rib. Face the locked part of clamp to left side. Face the tip of clamp to left side.
6. Fuse box #1	26. Main harness to battery minus terminal
7. Fuse box #2	

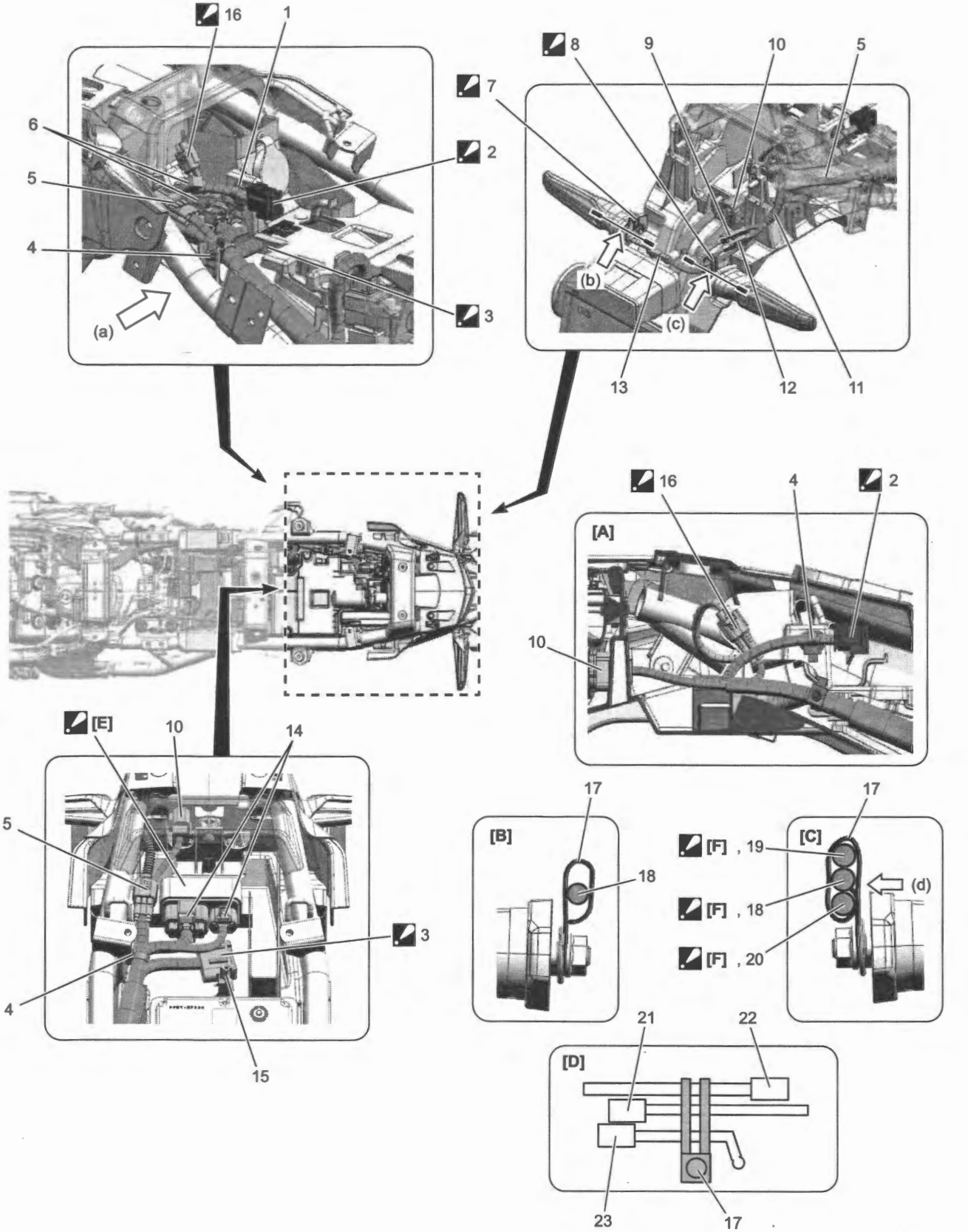

IL06L1910926-02

[A]: View [a]	10. Harness coupler (Rear combination light)
[B]: View [b]	11. Rear turn signal light lead wire
[C]: View [c]	12. Harness coupler (License light)
[D]: View [d]	13. Harness coupler (Rear turn signal light (LH))
[E]: Set the relay box holder to rib of the rear fender front.	14. Harness coupler (Relay box)
[F]: Each lead wire is random order.	15. Boss
1. Insert clamp	16. Option coupler (DC socket)
2. Mode select coupler (6P) : Set the cap to the connector.	17. Clamp
3. Joint connector : Set the joint connector under the electric holder lid. Set the joint connector between the relay box and boss.	18. Rear turn signal light (LH) lead wire
4. Insert clamp	19. License light lead wire
5. Harness coupler (Rear turn signal light)	20. Rear turn signal light (RH) lead wire
6. Option couplers (Alarm system)	21. Rear turn signal light (LH) coupler
7. Clamp : Clamp the rear turn signal light (LH) lead wire.	22. License light coupler
8. Clamp : Clamp the rear turn signal light lead (RH) wire.	23. Rear turn signal light (RH) coupler
9. Harness coupler (Rear turn signal light (RH))	

Sub harness

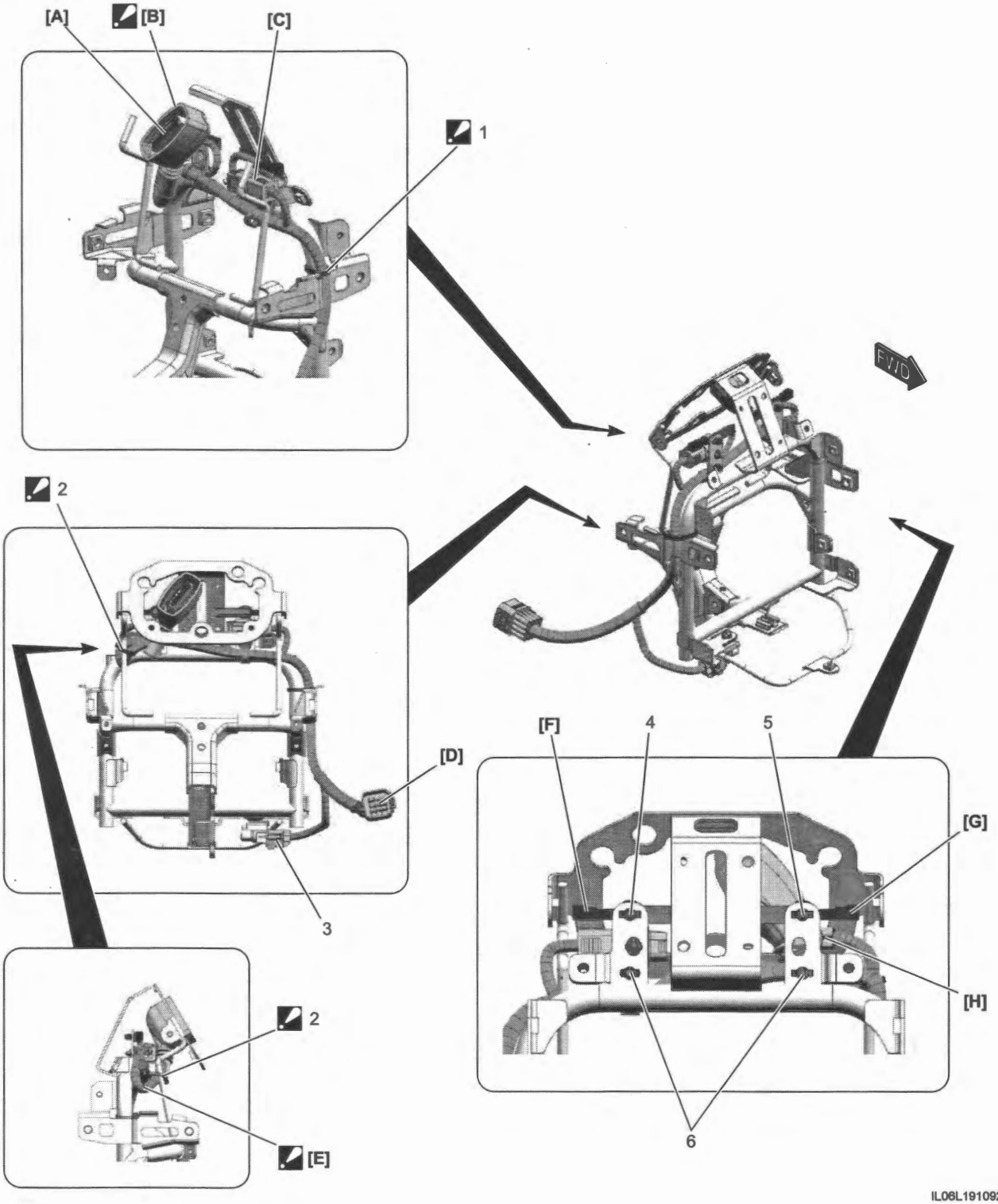

[A]: To combination meter	[G]: Put the connector on the cowling brace from back side.
[B]: Fit the coupler boot until it contacts bottom of the combination meter certainly.	1. Clamp : Clamp the sub harness and cowling brace at the blue tape position. Cut off the tip of the clamp leaving 0 – 3 mm (0 – 0.1 in). Cut off the excess tip of the clamp.
[C]: To headlight	2. Clamp : Clamp the sub harness and cowling brace at the fix tape position. Cut off the tip of the clamp leaving 0 – 3 mm (0 – 0.1 in). Cut off the excess tip of the clamp.
[D]: To main harness	3. Ambient air temperature sensor
[E]: Pass the combination meter lead wire downward	4. Insert clamp (Front turn signal light (RH))
[F]: To front turn signal light (RH) Coupler color: Black	5. Insert clamp (Front turn signal light (LH))
[G]: To front turn signal light (LH) Coupler color: Red or Gray	6. Insert clamp (Main harness)

Handle switch

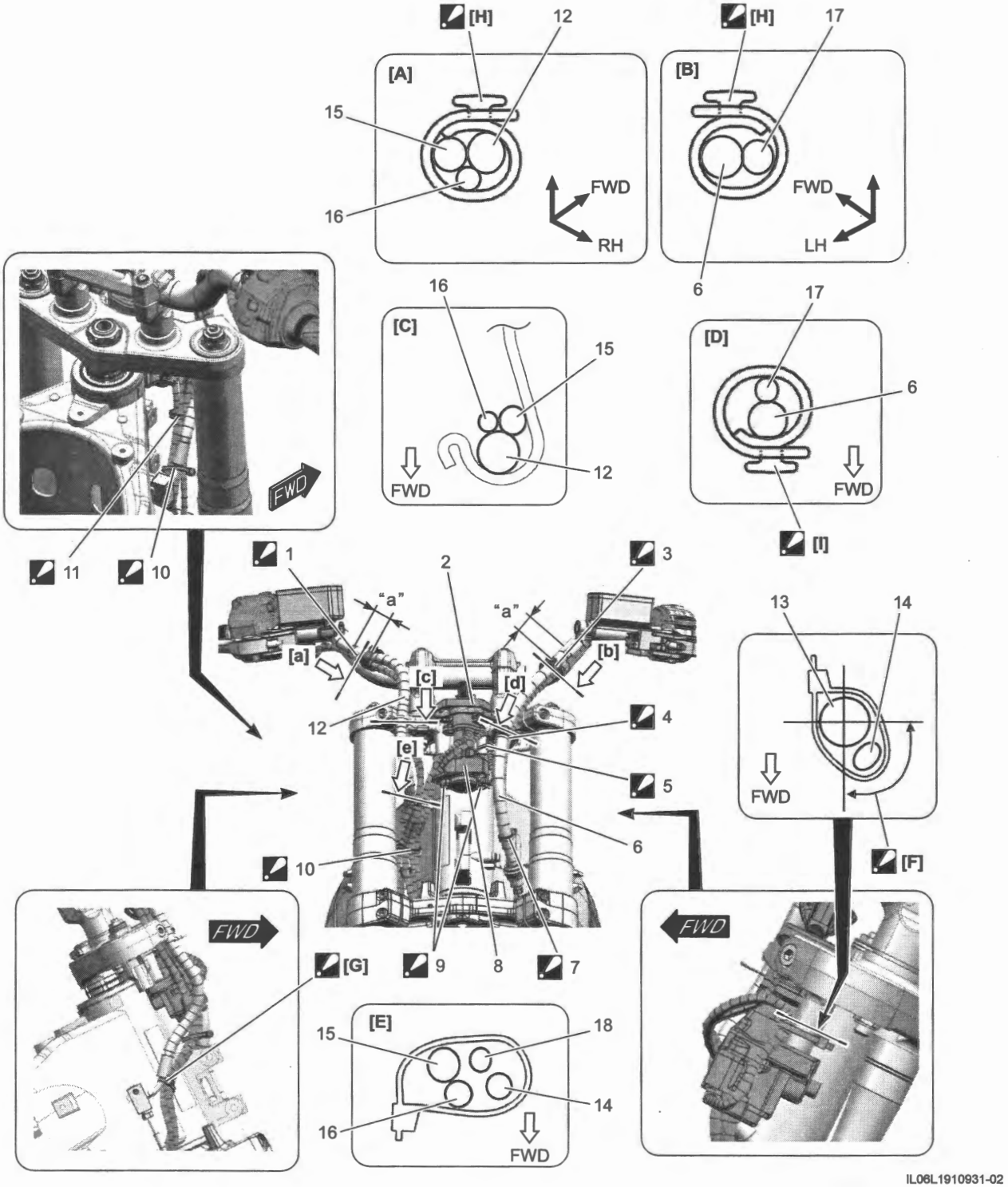

IL06L1910931-02

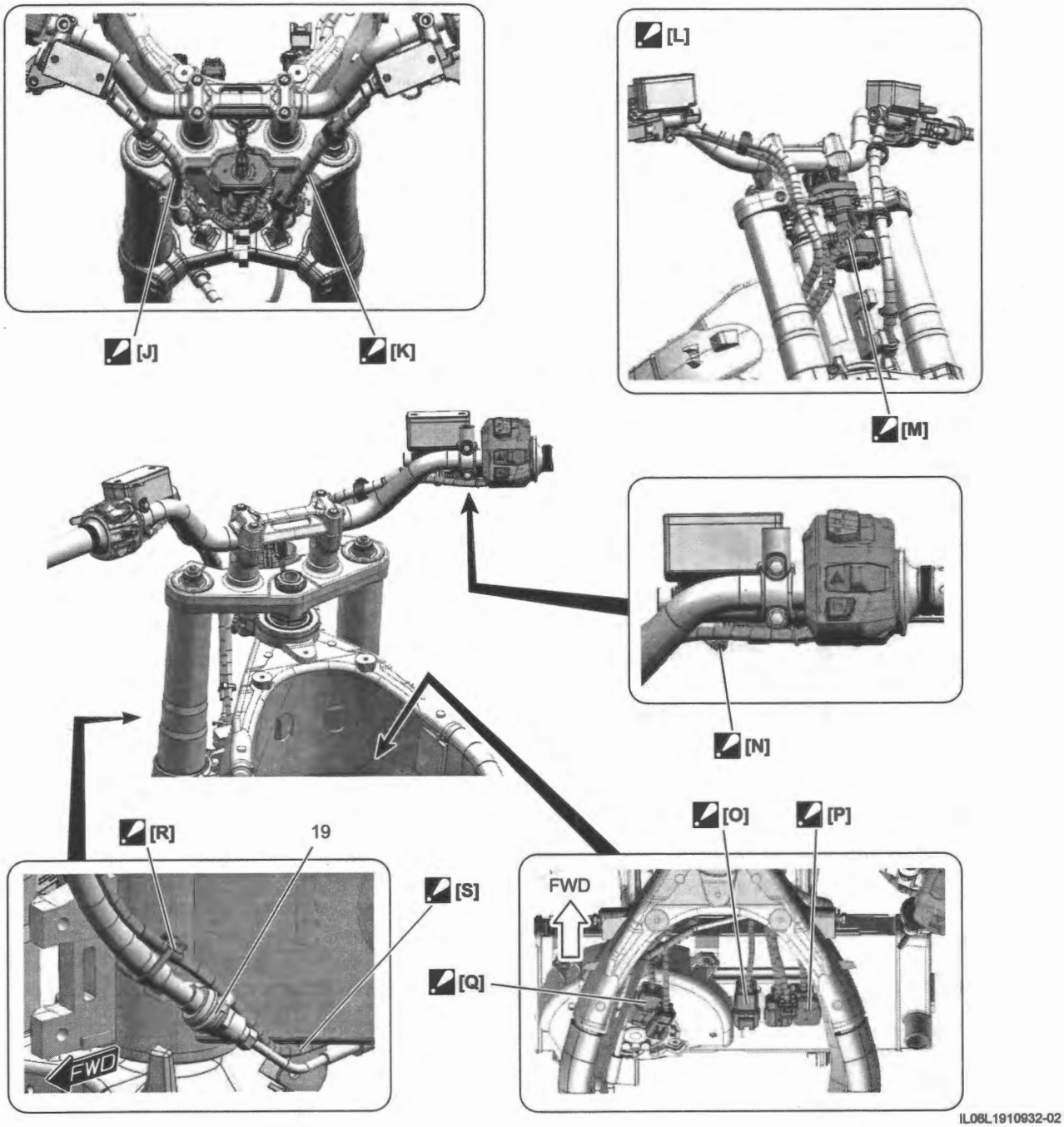

IL06L1910932-02

[A]: View [a]	2. Immobilizer antenna or steering lock cover
[B]: View [b]	3. Clamp : Clamp the left handle with lead wire and clutch hose.
[C]: View [c]	4. Clamp Clamp the left handle with lead wire and clutch hose within 20mm (0.79 in) from the upper bracket.
[D]: View [d]	5. Clamp : Clamp the ignition switch lead wire and upper bracket.Cut off the excess tip of the clamp.
[E]: View [e]	6. Clutch hose
[F]: Clamp the Ignition switch lead wire and upper bracket within this area.	8. Clamp : Clamp the left handle with lead wire and clutch hose.Cut off the excess tip of the clamp.
[G]: Lead wires (Right handle switch, ignition switch and immobilizer antenna) pass between the frame and front side of front brake hose.	8. Ignition switch
[H]: The lock part faces upward.	9. Ignition switch bolt : Tighten new ignition switch mounting bolts until head of each bolt is broken off.
[I]: The lock part faces forward.	10. Clamp : Clamp the right handle switch lead wire, APS lead wire, ignition switch lead wire and immobilizer antenna lead wire. Face the locked part of clamp to left side as shown in the view [e]. Cut off the excess tip of the clamp.
[J]: Right handle switch pass the backside of front brake hose.	11. Clamp : Clamp the right handle switch lead wire, APS lead wire, ignition switch lead wire, and immobilizer antenna lead wire and front brake hose. Cut off the excess tip of the clamp.
[K]: Left handle switch pass the backside of clutch hose.	12. Front brake hose
[L]: Ignition switch lead wire and immobilize antenna lead wire pass as shown in the figure.	13. Upper bracket
[M]: Never twist the ignition switch lead wire between first clamp and second clamp.	14. Ignition switch lead wire
[N]: Front brake switch lead wire passes under the right handle switch lead wire.	15. Right handle switch lead wire
[O]: Fix the ignition switch coupler to a hole of the radiator fan cover.	16. APS lead wire
[P]: Fix the right handle switch coupler to a hole of the radiator fan cover.	17. Left handle switch lead wire
[Q]: Fix the left handle switch coupler to a hole of the radiator fan cover.	18. Immobilizer antenna lead wire
[R]: Clamp at the taping position. Clamp on protector of clutch hose.	19. Brake hose guide
[S]: Ignition switch lead wire passes between the frame and clutch hose.	"a": 20 – 30 mm (0.79 – 1.2 in)
1. Clamp : Clamp the right handle switch lead wire, APS lead wire and front brake hose.	

Power source

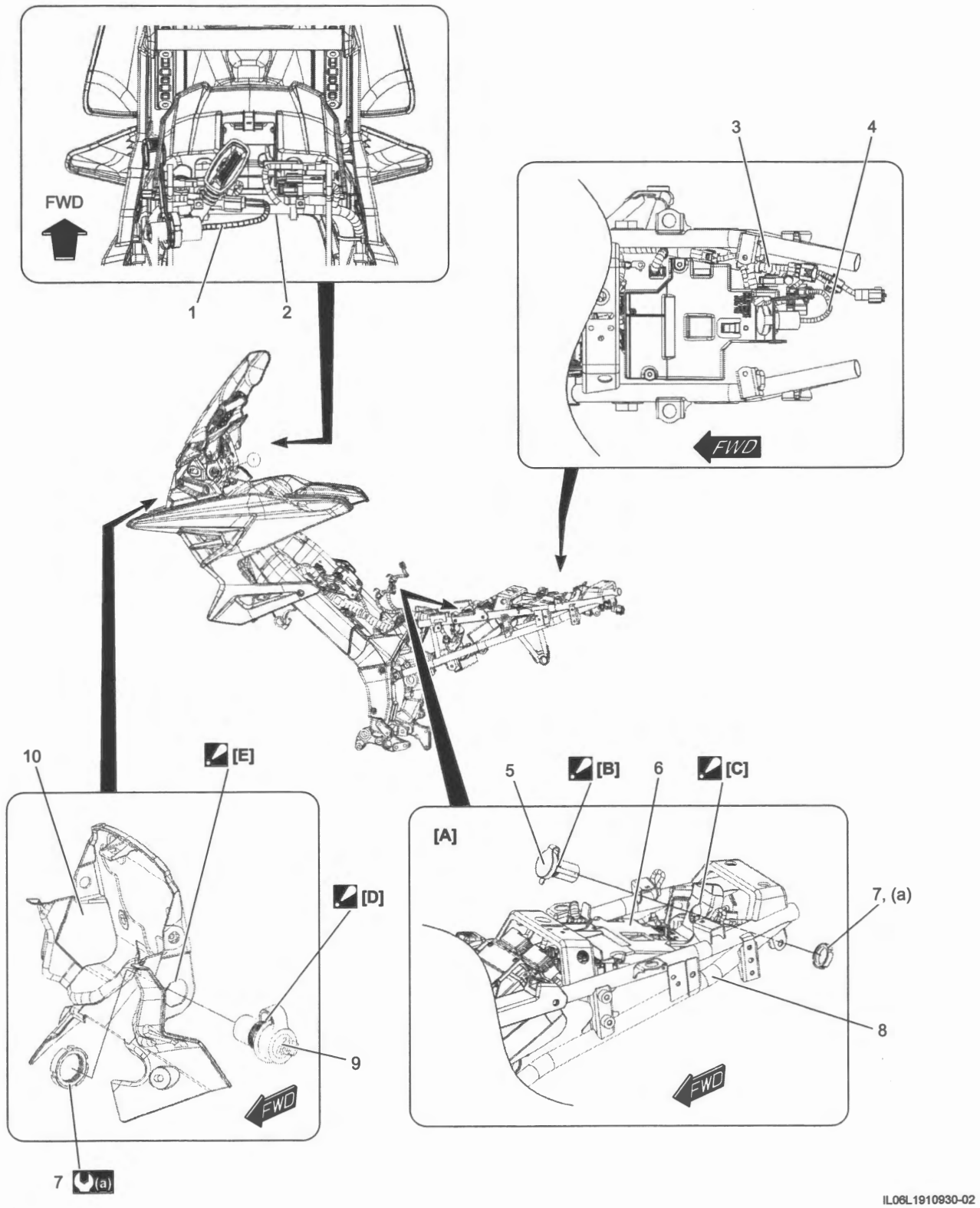

IL06L1910930-02

[A]: For DL1050RC	4. Power source socket lead wire
[B]: Align the projection of power source socket to the groove of cap.	5. Power source socket
[C]: Align the projection of power source socket to the groove of electric parts holder.	6. Electric parts holder
[D]: Align the projection of USB socket to the groove of cap.	7. USB socket nut
[E]: Pass	8. Seat rail
1. USB socket lead wire	9. USB socket
2. Sub harness	(a) : 2.8 N·m (0.29 kgf-m, 2.10lbf-ft)
3. Main harness	

Engine electrical parts

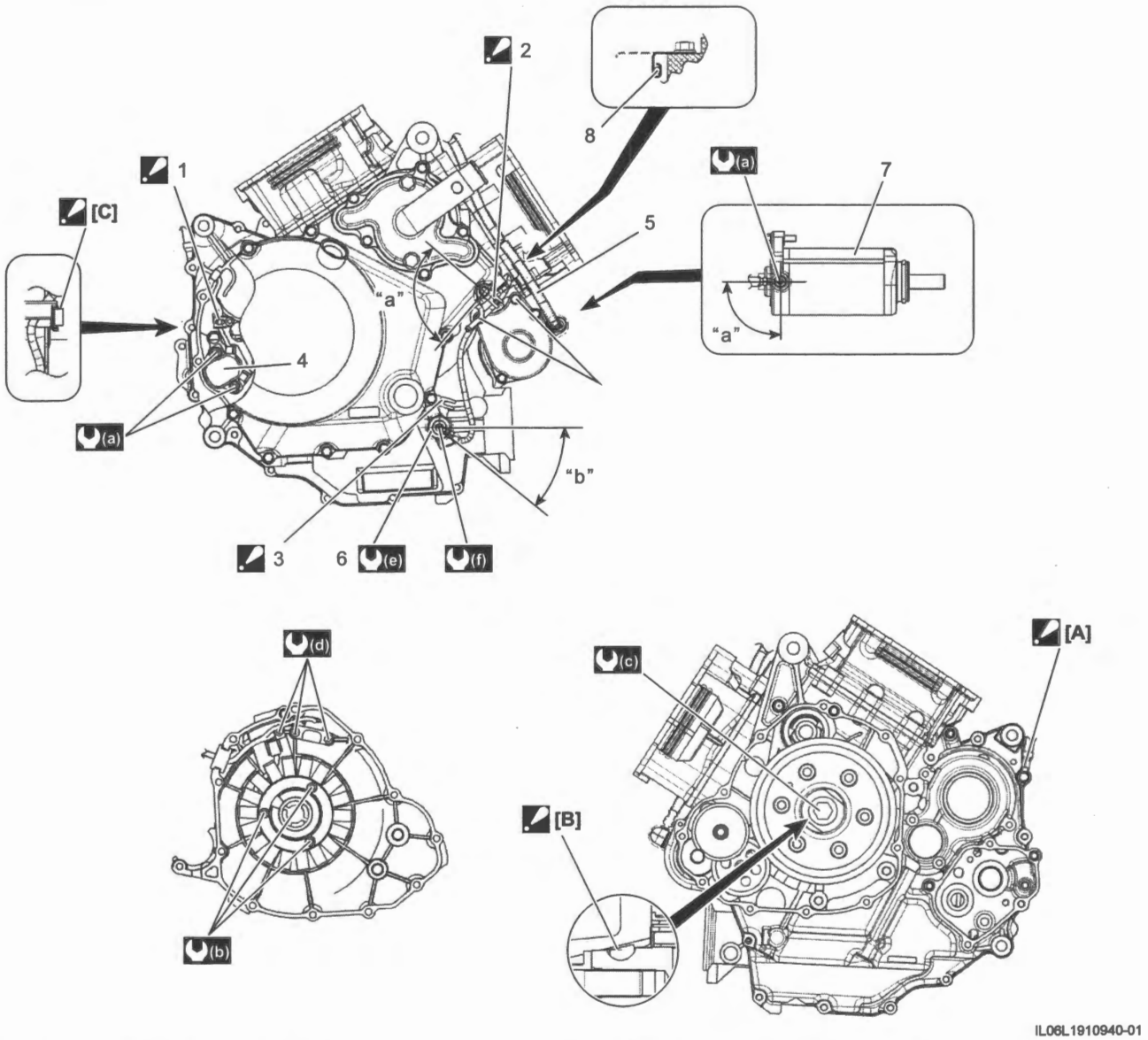

IL06L1910940-01

[A]: Set the terminal in correct direction as shown. After the battery (–) lead wire contacted the crankcase, tighten the bolt.	8. Oil pressure switch lead wire
[B]: Install the key in a manner so that the edge of keyway and the edge of the key should be horizontal.	"a": 85° – 95°
1. Clamp : Clamp the GP switch lead wire.	"b": 30° – 45°
2. Clamp : Clamp the oil pressure switch lead wire.	(a) : 6 N·m (0.6 kgf-m, 4.5 lbf-ft)
3. Clamp : Do not clamp the oil pressure switch lead wire.	(b) : 10 N·m (1.0 kgf-m, 7.5 lbf-ft)
4. GP switch	(c) : 180 N·m (18.0 kgf-m, 130.5 lbf-ft)
5. Starter motor lead wire	(d) : 6.5 N·m (0.65 kgf-m, 5.0 lbf-ft)
6. Oil pressure switch	(e) : 13 N·m (1.3 kgf-m, 9.5 lbf-ft)
7. Starter motor	(f) : 1.5 N·m (0.15 kgf-m, 1.0 lbf-ft)
8. Oil pressure switch lead wire	

Component Location

Electrical Components Location

BENL06L29103001

Refer to "Electrical Components Location": Service Manual Information in Section 0A (Page 0A-10).

Repair Instructions

Relay Box Removal and Installation

BENL06L29106001

Removal

Remove the electric part holder. ☞(Page 9D-40)

1) Remove the relay box couplers (1).

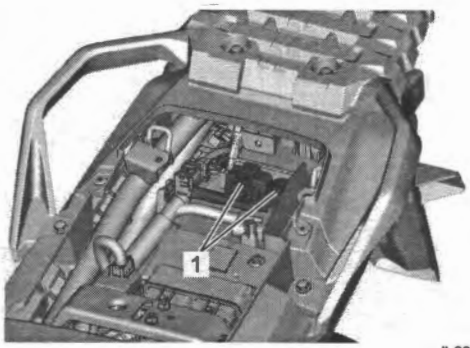

IL08L1910928-01

2) Remove the relay box (1) from the relay box holder (2).

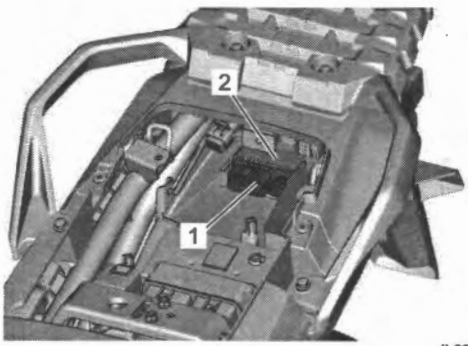

IL08L1910929-01

Installation

Install the removed parts in the reverse order of removal.

Specifications

Tightening Torque Specifications

BENL08L2910S001

Reference:

For the tightening torques of fasteners not specified in this page, refer to:

"Wiring Harness Routing Diagram" (Page 9A-23)

"Fasteners Information" in Section 0C (Page 0C-10)

Lighting Systems

Precautions

Precautions for Lighting Systems

BENL06L29200001

NOTICE

- **When you touch the bulb with your bare hands, clean the bulb with a cloth moistened with alcohol or soap water to prevent premature bulb failure.**
- **Do not use the bulb of a wattage other than specification.**

Diagnostic Information and Procedures

Headlight Symptom Diagnosis

BENL06L29204001

Condition	Possible cause	Correction / Reference Item
Low beam does not light up	Circuit fuse blown.	*Replace fuse and check short circuit.*
	Faulty LED.	*Replace headlight assembly. ☞(Page 9B-4)*
	Wiring or ground faulty.	*Repair wiring. ☞(Page 9A-5)*
	Dimmer switch faulty.	*Check dimmer switch. ☞(Page 9B-13)*
High beam does not light up	Circuit fuse blown.	*Replace fuse and check short circuit.*
	Faulty LED.	*Replace headlight assembly. ☞(Page 9B-4)*
	Wiring or ground faulty.	*Repair wiring. ☞(Page 9A-5)*
	Faulty dimmer/passing light switch.	*Check dimmer switch. ☞(Page 9B-13)*

Turn Signal Light and Hazard Light Symptom Diagnosis

BENL06L29204002

Condition	Possible cause	Correction / Reference Item
Flash rate high or one side only flashes (For Bulb Type)	Bulb blown.	*Replace bulb. ☞(Page 9B-10)*
	Incorrect bulb.	*Replace bulb. ☞(Page 9B-10)*
	Faulty turn signal relay.	*Check turn signal relay. ☞(Page 9B-11)*
	Open circuit or high resistance existing either; between turn signal switch and non lighting bulb, or between hazard warning switch and non lighting bulb.	*Repair wiring. ☞(Page 9A-5)*
	Faulty hazard switch.	*Check hazard switch. ☞(Page 9B-13)*
Flash rate low (For Bulb Type)	Supply voltage low or high resistance.	*Check charging system. ☞(Page 1J-4)* *Repair wiring. ☞(Page 9A-5)*
	Faulty turn signal relay.	*Check turn signal relay. ☞(Page 9B-11)*
Flash rate high or one side only flashes (For LED Type)	Faulty turn signal relay.	*Check turn signal relay. ☞(Page 9B-11)*
	Faulty LED.	*Replace turn signal light. ☞(Page 9B-10)*
	Faulty wiring or ground.	*Repair wiring. ☞(Page 9A-5)*
	Faulty hazard switch.	*Check hazard switch. ☞(Page 9B-13)*
Flash rate low (For LED Type)	Supply voltage low or high resistance.	*Check charging system. ☞(Page 1J-4)*
	Turn signal relay faulty.	*Check turn signal relay. ☞(Page 9B-11)*

Rear Combination Light Symptom Diagnosis

BENL06L29204003

Condition	Possible cause	Correction / Reference Item
All lights do not light up	Faulty wiring or grounding.	*Repair wiring. ☞(Page 9A-5)*
	Circuit fuse blown.	*Replace fuse and check short circuit.*
	Faulty rear combination light.	*Replace rear combination light. ☞(Page 9B-7)*
Some lights do not light up	Faulty rear combination light.	*Replace rear combination light assembly and check short circuit.*
	Faulty wiring or grounding.	*Repair wiring. ☞(Page 9A-5)*
Brake light do not light up	Faulty front brake light switch.	*Check front brake light switch. ☞(Page 4A-10)*
	Faulty rear brake light switch.	*Check rear brake light switch. ☞(Page 4A-10)*
	Faulty wiring or grounding.	*Repair wiring. ☞(Page 9A-5)*
	Faulty rear combination light.	*Replace rear combination light assembly.*
Brake light stay on	Faulty front brake light switch.	*Check front brake light switch. ☞(Page 4A-10)*
	Faulty rear brake light switch.	*Check rear brake light switch. ☞(Page 4A-10)*
	Faulty rear combination light.	*Replace rear combination light assembly.*
	Faulty wiring or grounding.	*Repair wiring. ☞(Page 9A-5)*

License Plate Light Symptom Diagnosis

BENL06L29204004

Condition	Possible cause	Correction / Reference Item
License plate light does not light up	Circuit fuse blown.	*Replace fuse and check short circuit.*
	Bulb blown.	*Replace bulb. ☞(Page 9B-7)*
	Incorrect bulb.	*Replace bulb. ☞(Page 9B-7)*
	Faulty wiring or grounding.	*Repair wiring. ☞(Page 9A-5)*

Repair Instructions

Headlight Construction

BENL06L29206001

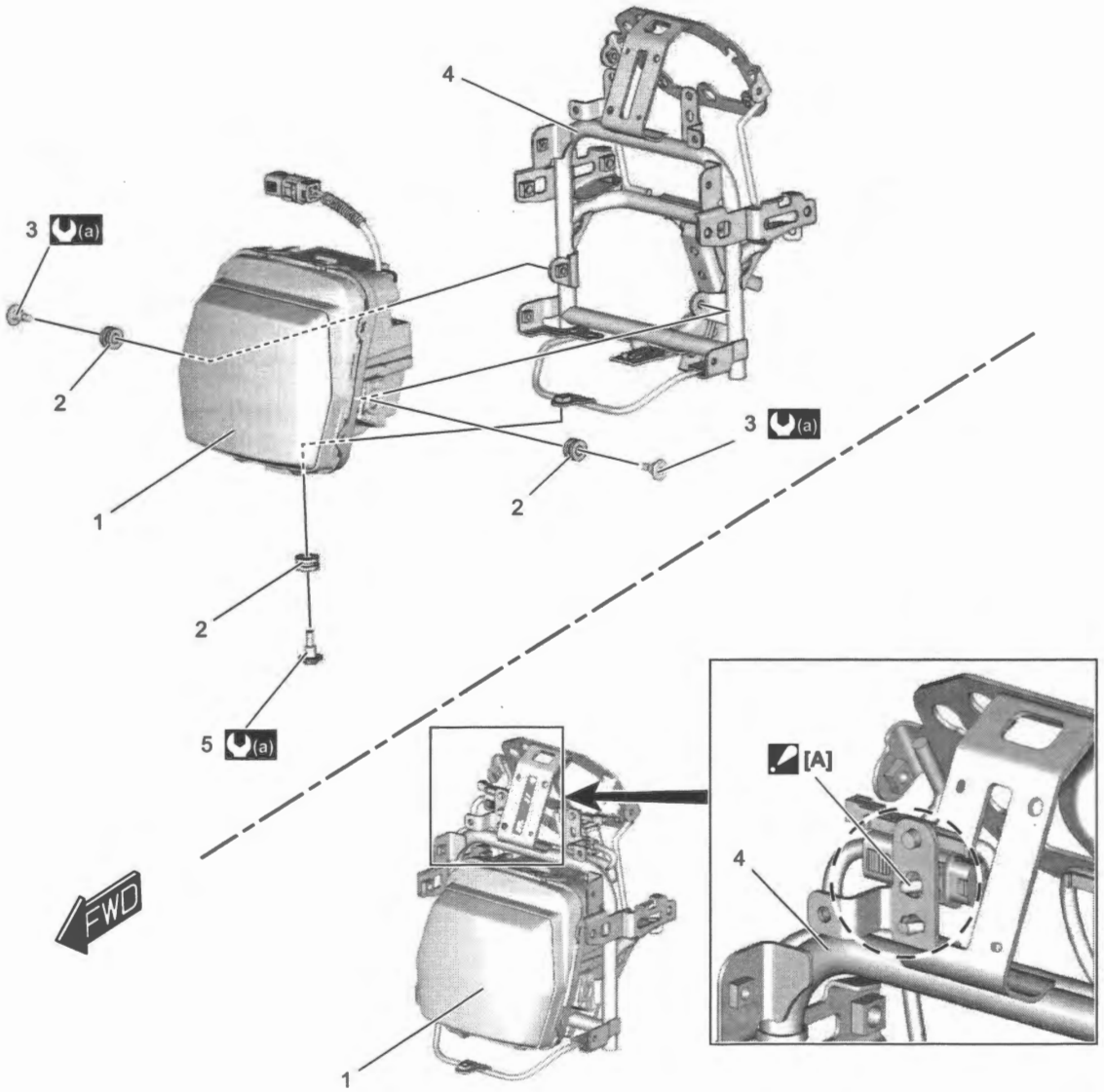

IL06L1920001-02

[A]: Insert a headlight coupler into a cowling brace.	3. Headlight bolt	(a): 10 N·m (1.0 kgf-m, 7.5 lbf-ft)
1. Headlight	4. Cowling brace	
2. Cushion	5. Headlight beam adjuster bolt	

Headlight Removal and Installation

BENL06L29206002

NOTE

Headlight is LED. Replace the headlight as an assembly if headlight is defective.

Removal

1) Remove the body cow cowling assembly. ☞(Page 9D-36)
2) Disassembly the body cowling assembly. ☞(Page 9D-37)
3) Disconnect the headlight lead wire coupler (1) and remove it from brace.

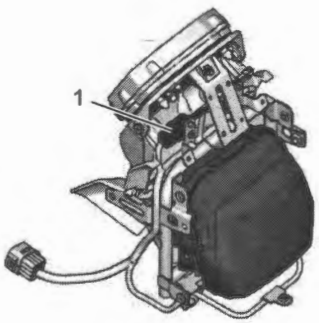

IL06L1920002-01

4) Remove the headlight (1).

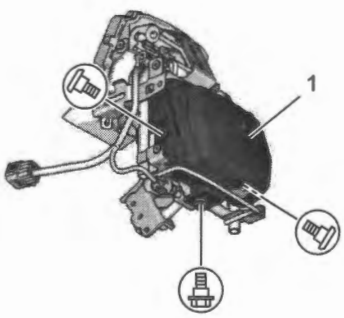

IL06L1920003-01

Installation

Install the headlight in the reverse order of removal. Pay attention to the following point:

- Tighten the headlight bolt (1) and headlight beam adjuster bolt (2) to the specified torque.

Tightening torque
Headlight bolt (a): 10 N·m (1.0 kgf-m, 7.5 lbf-ft)
Headlight beam adjuster bolt (b): 10 N·m (1.0 kgf-m, 7.5 lbf-ft)

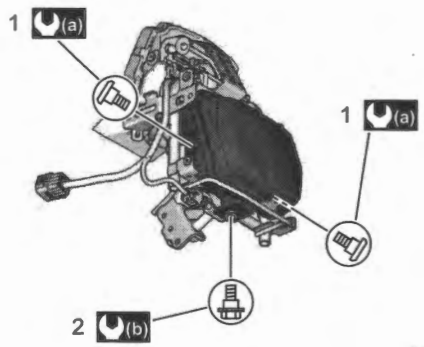

IL06L1920004-01

Headlight Beam Adjustment

BENL06L29206003

1) Loosen the headlight beam adjuster bolt (1) and adjust the headlight beam vertically.

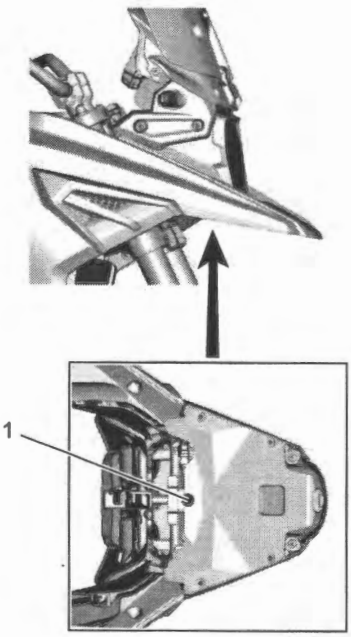

IL06L1920005-01

2) Tighten the headlight beam adjuster bolt (1) to the specified torque.

Tightening torque
Headlight beam adjuster bolt (a): 10 N·m (1.0 kgf-m, 7.5 lbf-ft)

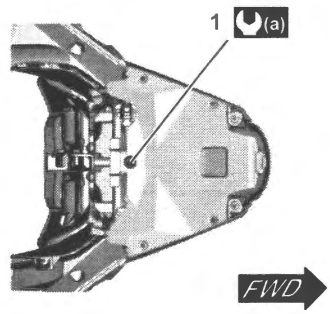

IL06L1920007-01

High Beam Relay Inspection

BENL06L29206004

1) Remove the relay box. ☞(Page 9A-42)
2) Check that there is no continuity between terminals "T14" and "20".
3) Check that there is continuity between terminals "T5" and "T11".
4) Connect battery positive (+) terminal and negative (–) terminal between terminals "T5" and "T11" and check for continuity between terminals "T14" and "T20".
   If there is no continuity when the relay is connected to the battery, replace the relay box (1).

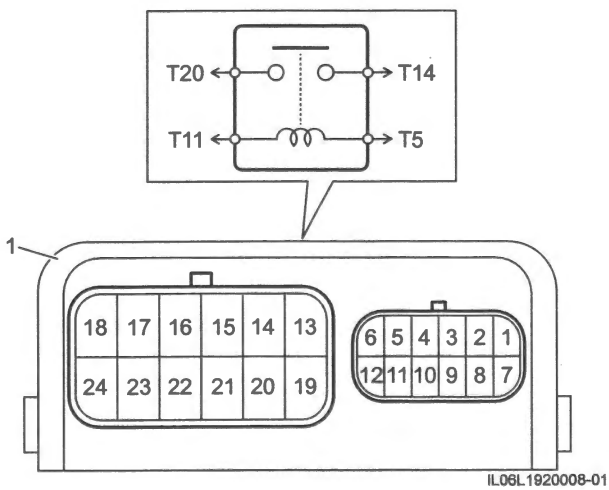

IL06L1920008-01

1. Relay box

5) After finishing the High beam relay inspection, install the removed parts.

Rear Lighting System Construction

BENL06L29206005

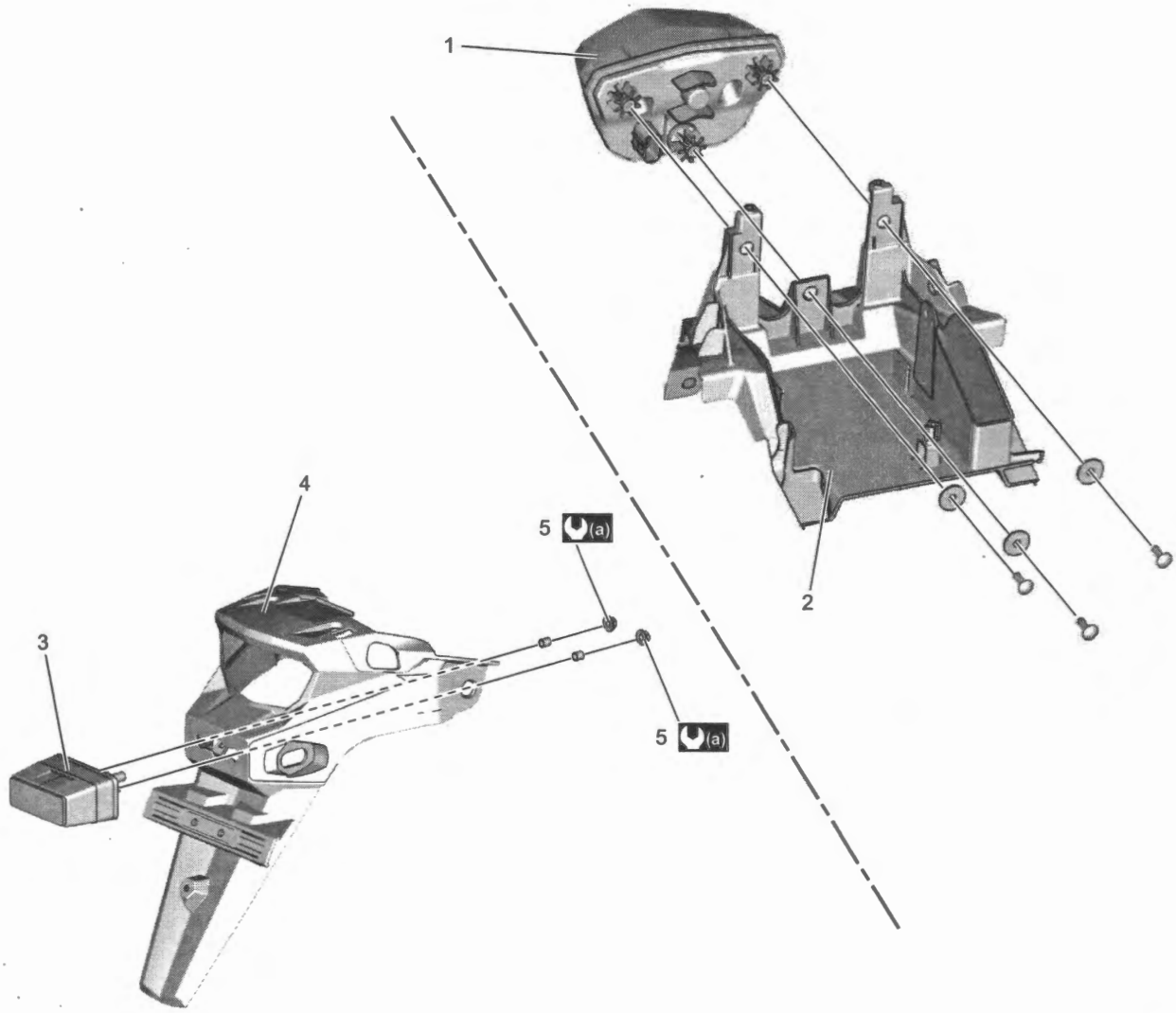

IL06L1920010-01

1. Rear combination light	3. License light	5. License light nut
2. Rear fender front	4. Rear fender rear	: 5.5 N·m (0.56 kgf-m, 4.05 lbf-ft)

Rear Combination Light Removal and Installation

BENL06L29206006

NOTE

Taillight and brake light are LED. Replace the rear combination light as an assembly if taillight or brake light is defective.

Refer to "Rear Fender (Front) Removal and Installation" in Section 9D (Page 9D-32).

License Plate Light Removal and Installation

BENL06L29206007

Refer to "Rear Fender (Rear) Removal and Installation" in Section 9D (Page 9D-31).

License Plate Light Bulb Replacement

BENL06L29206008

1) Remove the license plate light assembly. ☞(Page 9D-31)
2) Remove the screws (1) and lens (2).

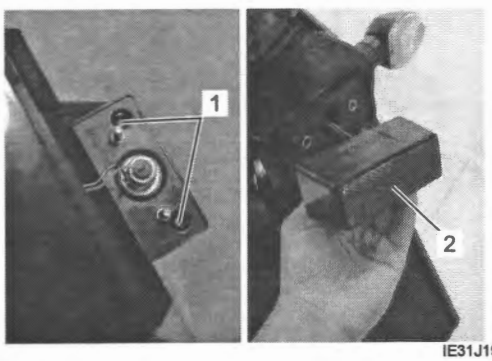

IE31J1920017-01

3) Push in on the bulb (1), turn it counterclockwise, and pull it out.

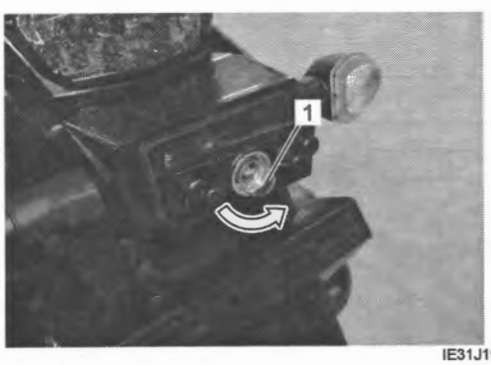

IE31J1920018-01

4) Install the license plate light assembly. ☞(Page 9B-7)
5) Install the removed parts.

Reflex Reflector Removal and Installation

BENL06L29206009

Refer to "Reflex Reflector Construction (If Equipped)" (Page 9B-11).

Turn Signal Light Construction

BENL06L29206010

Front

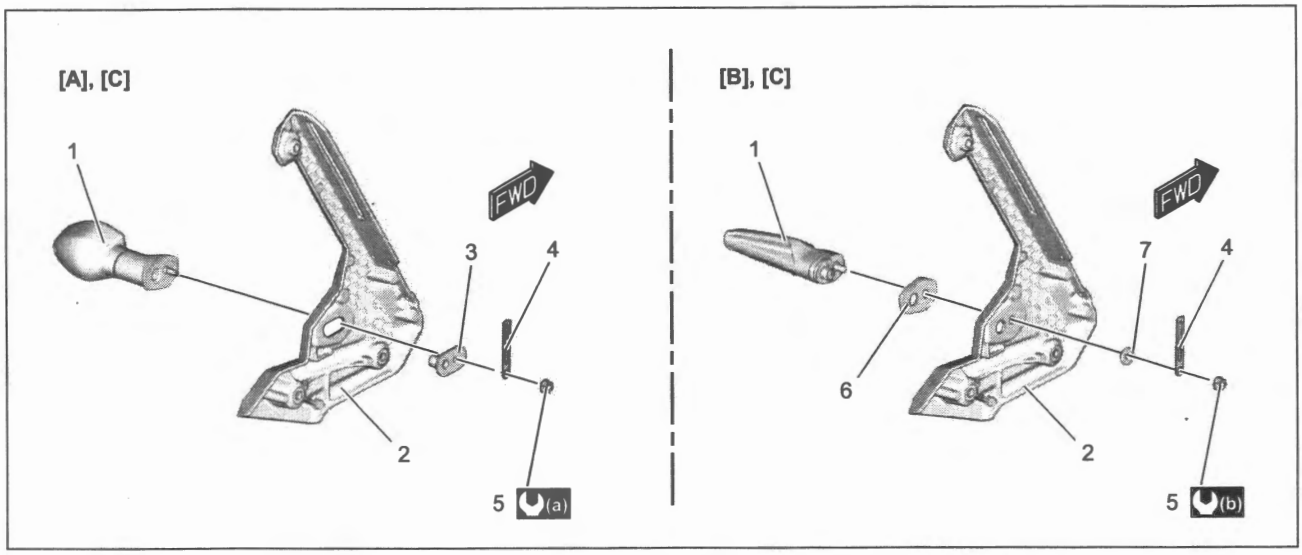

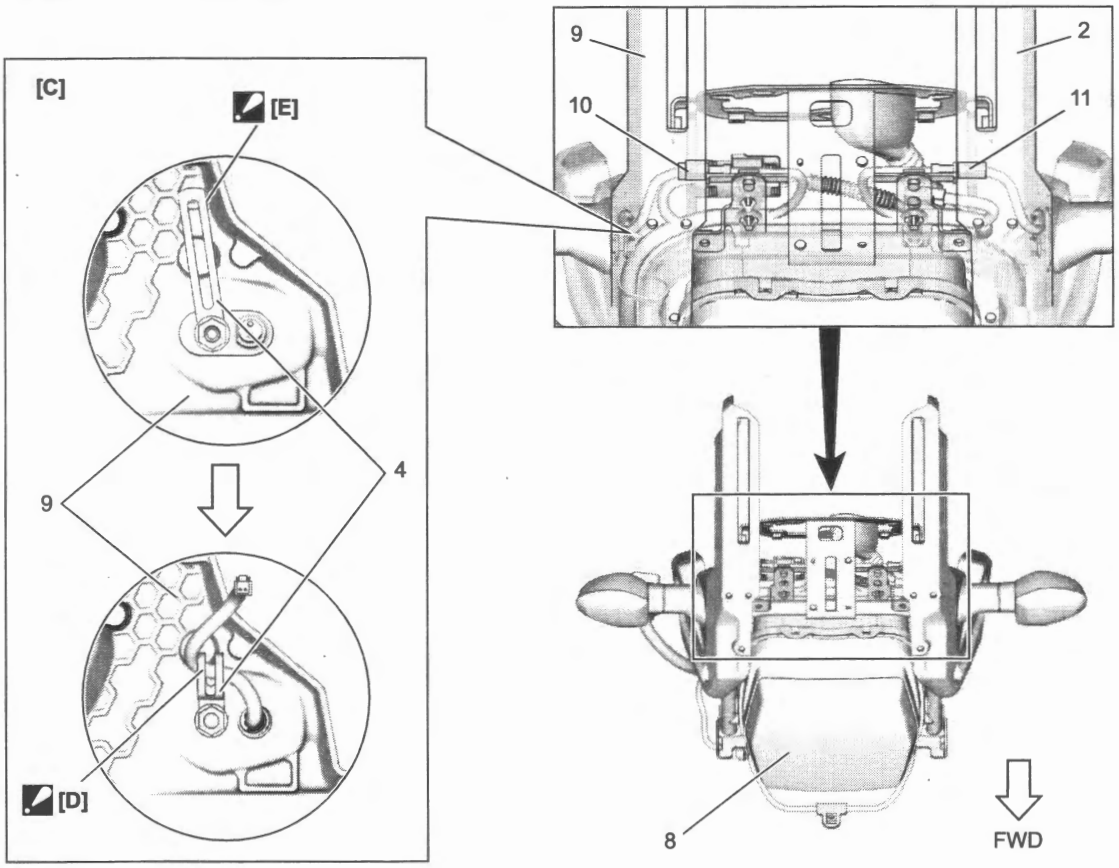

IL06L1920011-03

[A]: For bulb type	2. Windscreen Brace (LH)	9. Windscreen Brace (RH)
[B]: For LED type	3. Turn signal plate	10. Front turn signal light coupler (RH)
[C]: The same procedures are applicable to both the right and left parts except the fixed clamp.	4. Clamp	11. Front turn signal light coupler (LH)
[D]: Clamp the front turn signal light lead wire.	5. Turn signal nut	(a) : 1.3 N·m (0.13 kgf-m, 0.95 lbf-ft)
[E]: Install the opened clamp touching to inside of windscreen brace. Face the clamp upward.	6. Turn signal cushion	(b) : 5.5 N·m (0.56 kgf-m, 4.05lbf-ft)
[G]: Clamp the front turn lead wire	7. Turn signal washer	
1. Front turn signal light	8. Headlight	

Rear

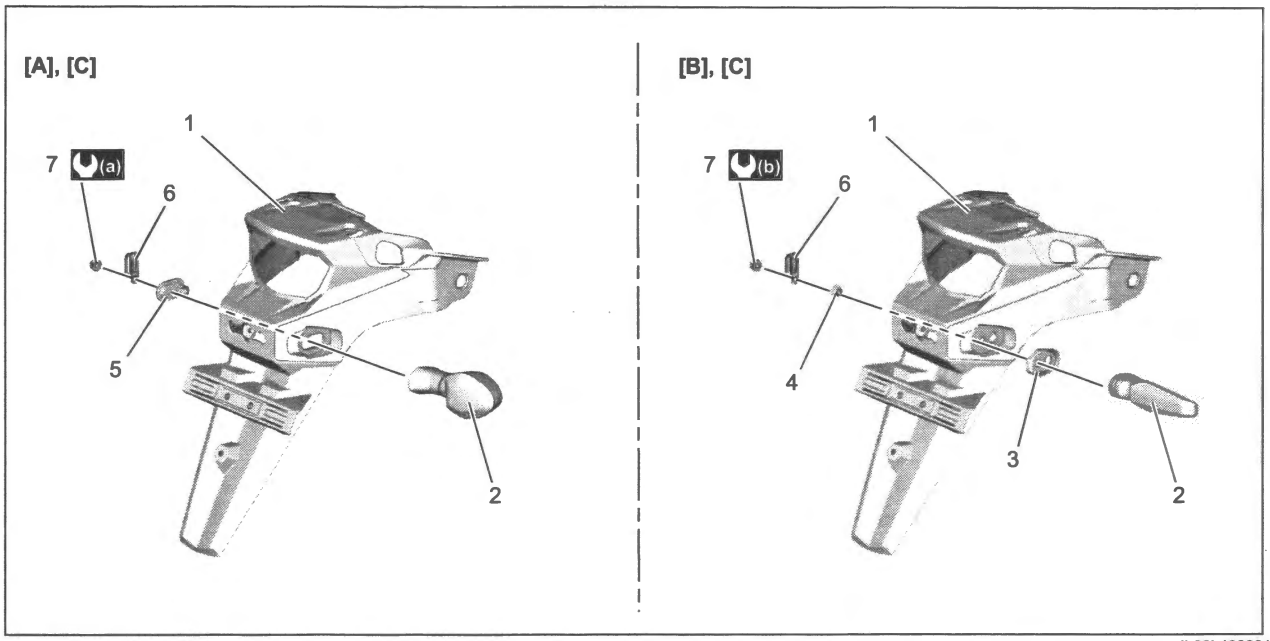

IL06L1920012-03

[A]: For bulb type	2. Rear turn signal light	6. Clamp
[B]: For LED type	3. Turn signal cushion	7. Turn signal nut
[C]: The same procedures are applicable to both the right and left parts except the fixed clamp.	4. Turn signal washer	(a) : 1.3 N·m (0.13 kgf-m, 0.95 lbf-ft)
1. Rear fender rear	5. Turn signal plate	(b) : 5.5 N·m (0.56 kgf-m, 4.05 lbf-ft)

Turn Signal Light Components

BENL06L29206011

For bulb type

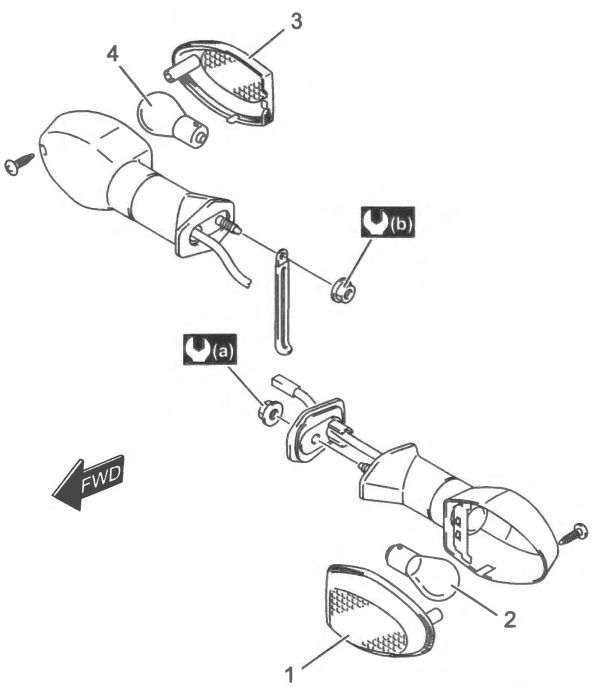

IE31J1920041-01

1. Front turn signal lens	
2. Front turn signal light bulb (12 V, 21 W)	
3. Rear turn signal lens	
4. Rear turn signal light bulb (12 V, 21 W)	
(a) : 1.3 N·m (0.13 kgf-m, 1.0 lbf-ft)	

For LED type

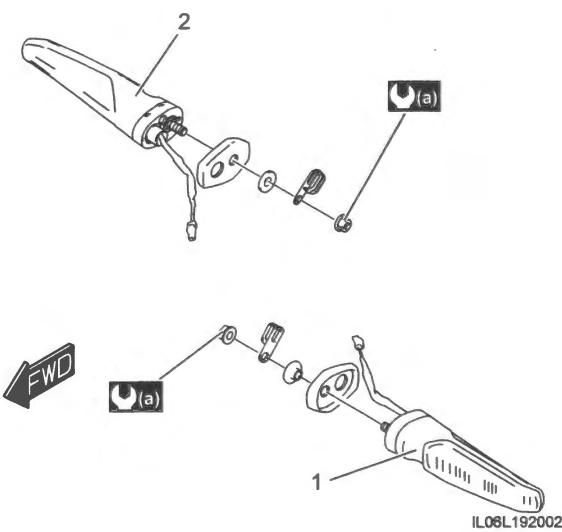

IL06L1920024-01

1. Front turn signal light	
2. Rear turn signal light	
(a) : 5.5 N·m (0.56 kgf-m, 4.05 lbf-ft)	

Turn Signal Light Removal and Installation

BENL06L29206012

Front turn signal light

Refer to "Windscreen Brace Removal and Installation" in Section 9D (Page 9D-38).

Rear turn signal light

Refer to "Rear Fender (Rear) Removal and Installation" in Section 9D (Page 9D-31).

Turn Signal Light Bulb Replacement

BENL06L29206013

For bulb type

NOTE

The same procedures is applicable to both the right and left lights.

1) Remove the screw (1) and lens (2).

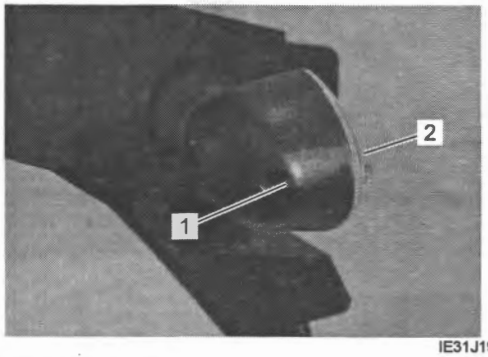

IE31J1920024-01

2) Replace the bulb (1) with a new one.

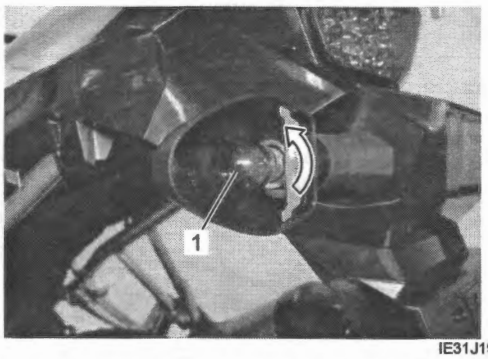

IE31J1920025-01

3) After finishing the front turn signal light bulb replacement, reinstall the front turn signal light.

For LED type

NOTE

If LED operation is abnormal, replace the LED turn signal light with a new one. ☞(Page 9B-10)

Reflex Reflector Construction (If Equipped)

BENL06L29206014

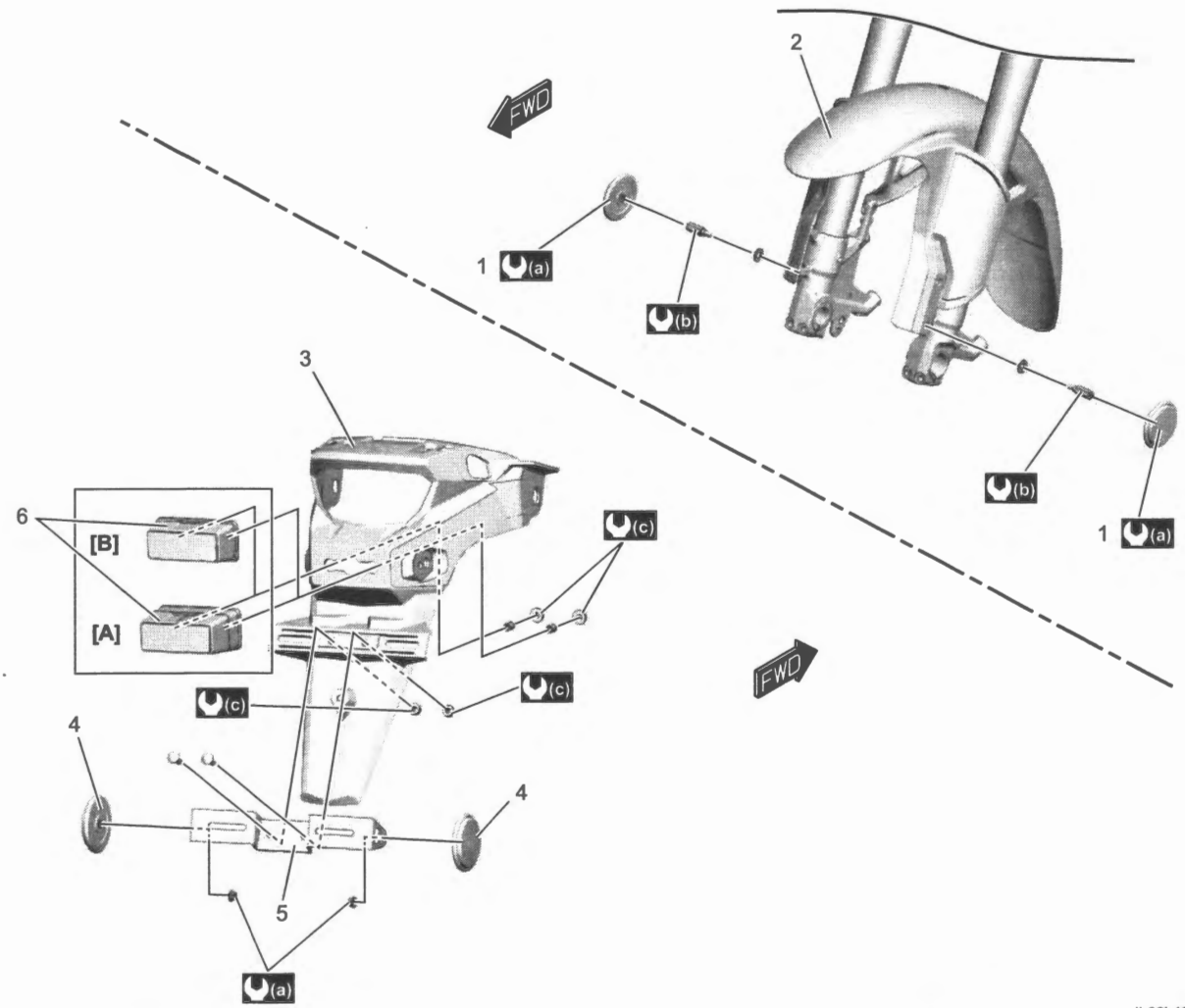

IL06L1920014-02

[A]: For U.S.A., Canada and California State	3. Rear fender rear	(a) : 1.8 N·m (0.18 kgf-m, 1.5 lbf-ft)
[B]: For others	4. Rear side reflex reflector (If equipped)	(b) : 10 N·m (1.0 kgf-m, 7.5 lbf-ft)
1. Front side reflex reflector (If equipped)	5. License plate bracket (If equipped)	(c) : 5.5 N·m (0.56 kgf-m, 4.05 lbf-ft)
2. Front fender	6. License light	

Turn Signal Relay Inspection

BENL06L29206015

Refer to "Electrical Components Location": Service Manual Information in Section 0A (Page 0A-10).

NOTE

Make sure that the battery is fully charged.

Before removing the turn signal relay, check the operation of the turn signal light.
If the turn signal light does not illuminate, inspect the LED (For LED type) or bulb (For bulb type), turn signal switch and circuit connection.

If the LED (For LED type) or bulb (For bulb type), turn signal switch and circuit connection are OK, the turn signal relay may be faulty; therefore, replace the turn signal relay with a new one. ☞(Page 9B-12)

Turn Signal Relay Removal and Installation

BENL06L29206016

DL1050RQ

Removal

1) Remove the frame cover. ☞(Page 9D-39)
2) Disconnect the turn signal relay coupler (1).
3) Remove the turn signal relay (2).

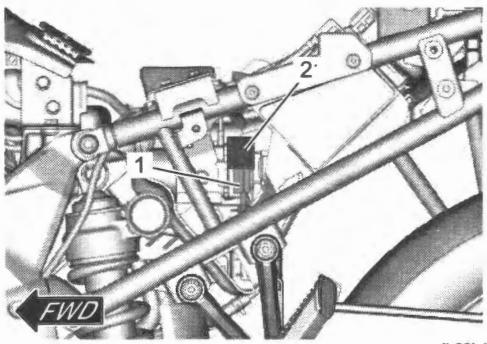

IL06L1920015-01

DL1050RC

Removal

1) Remove the battery holder. ☞(Page 9D-39)
2) Disconnect the turn signal relay coupler (1).
3) Remove the turn signal relay (2).

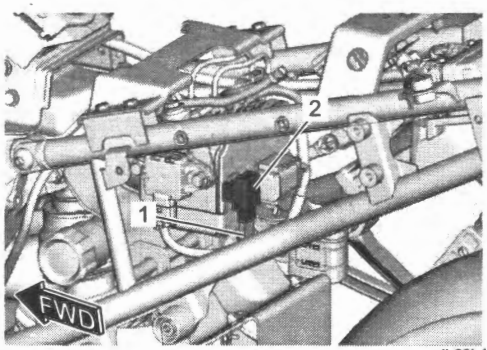

IL06L1920016-01

Installation

Install the turn signal relay in the reverse order of removal.

Turn Signal Switch Inspection

BENL06L29206017

1) Turn the ignition switch OFF.
2) Remove the air cleaner box. ☞(Page 1D-6)
3) Disconnect the left handle switch coupler No.1 (1) and No.2 (2).

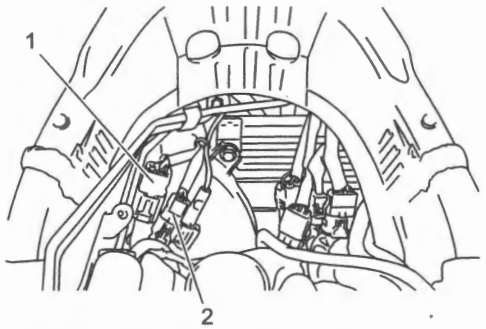

IL06L1920017-02

4) Inspect the turn signal switch for continuity with a circuit tester.
   If any defect is found, replace the left handle switch with a new one. ☞(Page 6B-3)

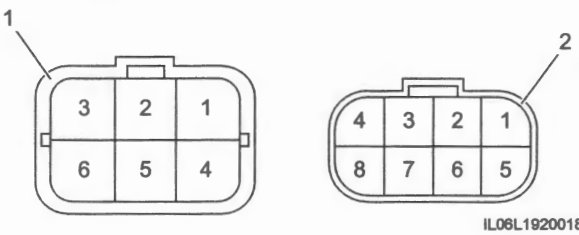

IL06L1920018-02

1. Left handle switch coupler No.1
2. Left handle switch coupler No.2

Coupler No. / Terminal No. / Position	No.1	No.2	
	T6	T7	T6
L	○	○	
PUSH			
R		○	○

IL06L1920022-01

5) After finishing the turn signal switch inspection, reinstall the removed parts.

Hazard Switch Inspection

BENL06L29206018

1) Turn the ignition switch OFF.
2) Remove the air cleaner box. ☞(Page 1D-6)
3) Disconnect the throttle grip assembly coupler (1).

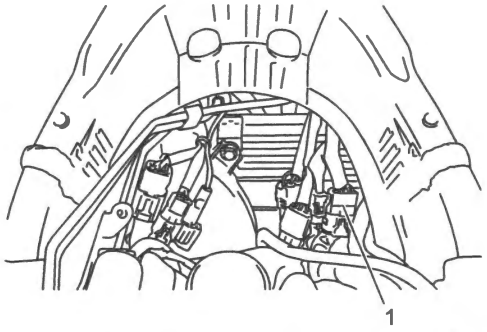

IL06L1930030-04

4) Inspect the hazard switch for continuity with a circuit tester.
If any abnormality is found, replace the right handle switch with a new one. Refer to "Handlebar Removal and Installation" in Section 6B (Page 6B-3).

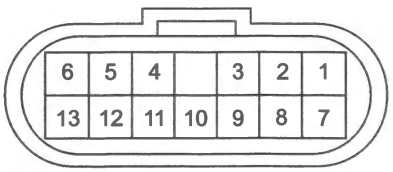

Terminal No. / Position	T7	T8	T13
OFF			
ON	○	○	○

IL06L1920020-01

5) After finishing the hazard switch inspection, install the removed parts.

Dimmer / Passing Light Switch Inspection

BENL06L29206019

1) Turn the ignition switch OFF.
2) Remove the air cleaner box. ☞(Page 1D-6)
3) Disconnect the left handle switch coupler No.1 (1).

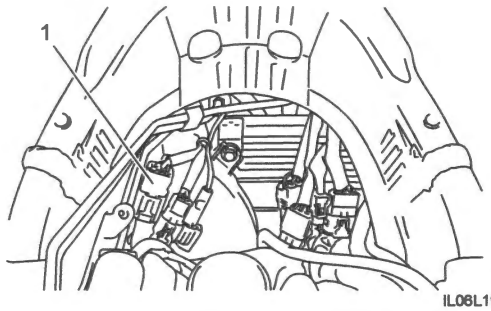

IL06L1930046-03

4) Inspect the dimmer/passing light switch for continuity with a circuit tester.
If any abnormality is found, replace the left handle switch with a new one. Refer to ☞(Page 6B-3).

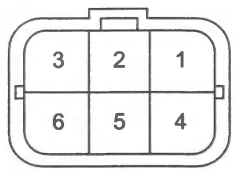

Terminal No. / Position	T2	T5
HI	○	○
LO		
PASS	○	○

IL06L1920021-01

5) After finishing the dimmer/passing light switch inspection, install the removed parts.

Specifications

Tightening Torque Specifications

BENL06L29207001

Fastening part	Tightening torque			Note
	N·m	kgf-m	lbf-ft	
Headlight bolt	10	1.0	7.5	☞(Page 9B-4)
Headlight beam adjuster bolt	10	1.0	7.5	☞(Page 9B-4)
Headlight beam adjuster bolt	10	1.0	7.5	☞(Page 9B-5)

Reference:
For the tightening torques of fasteners not specified in this page, refer to:
"Headlight Construction" (Page 9B-3)
"Rear Lighting System Construction" (Page 9B-6)
"Turn Signal Light Construction" (Page 9B-8)
"Turn Signal Light Components" (Page 9B-9)
"Reflex Reflector Construction (If Equipped)" (Page 9B-11)
"Fasteners Information" in Section 0C (Page 0C-10)

Combination Meter / Fuel Meter / Horn

Schematic and Routing Diagram

Combination Meter Circuit Diagram

BENL06L29302001

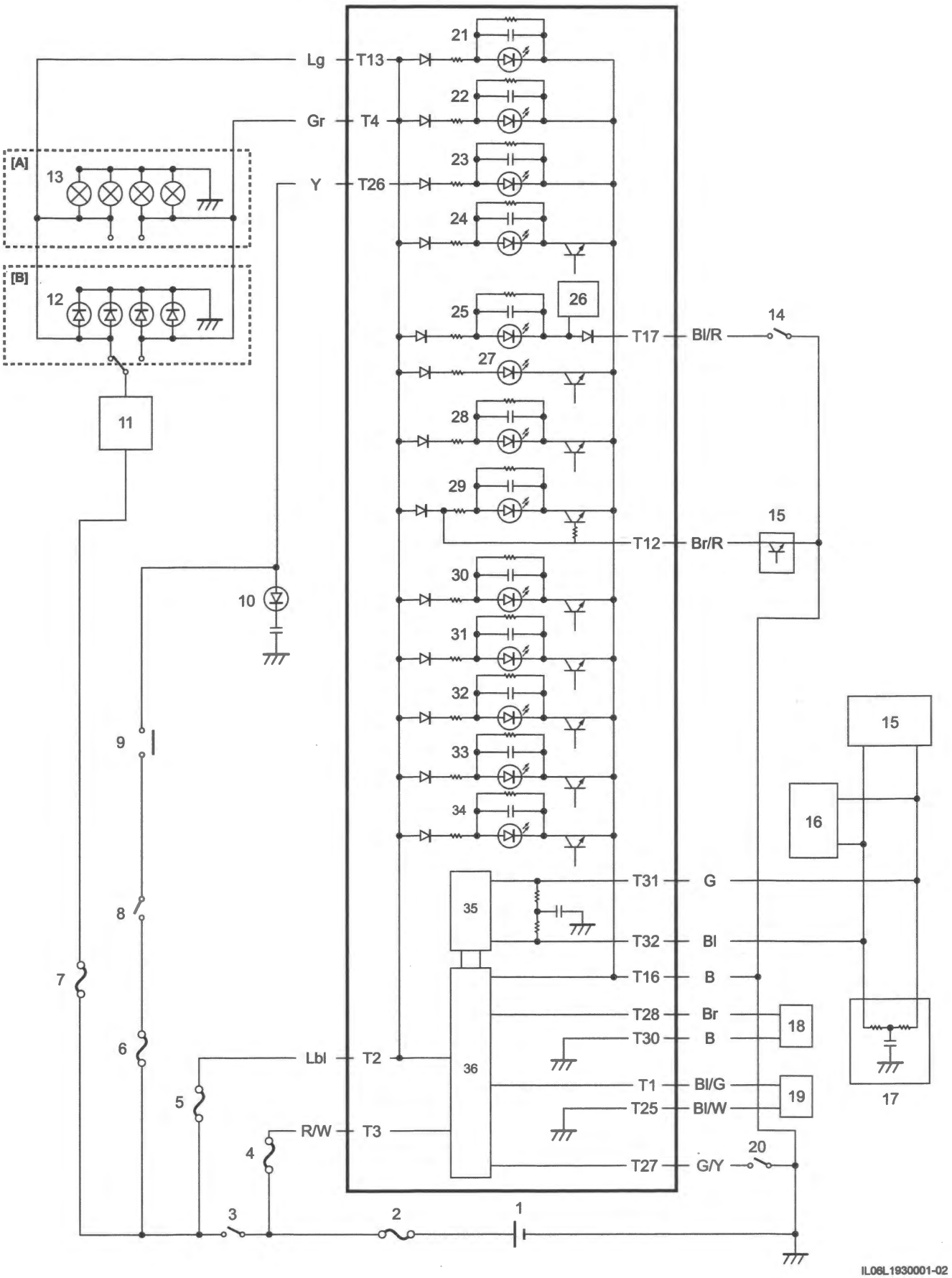

IL08L1930001-02

[A]: For DL1000RQ	12. Turn signal light (LED)	25. Neutral indicator light
[B]: For DL1000RC	13. Turn signal light (bulb)	26. Micro computer
1. Battery	14. GP switch	27. Illumination
2. Main fuse (30 A)	15. ABS control unit	28. Engine rpm indicator light
3. Ignition switch	16. IMU	29. ABS indicator light
4. Fuel fuse (10 A)	17. ECM	30. Malfunction indicator light
5. Ignition fuse (15 A)	18. Ambient air temp sensor	31. Warning indicator light (Oil pressure / Engine coolant temperature / Battery voltage)
6. Hi-beam fuse (10 A)	19. Fuel level sensor	32. Traction control indicator light
7. Signal fuse (10 A)	20. Oil pressure switch	33. Master warning indicator light
8. Dimmer switch	21. Turn signal indicator light (RH)	34. Freeze indicator light
9. Hi-beam relay	22. Turn signal indicator light (LH)	35. Can transceiver
10. Headlight (Hi)	23. Hi-beam indicator light	36. Micro computer
11. Turn signal switch	24. Cruise control indicator light (If equipped)	

Terminal Arrangement of Combination Meter Coupler "T"

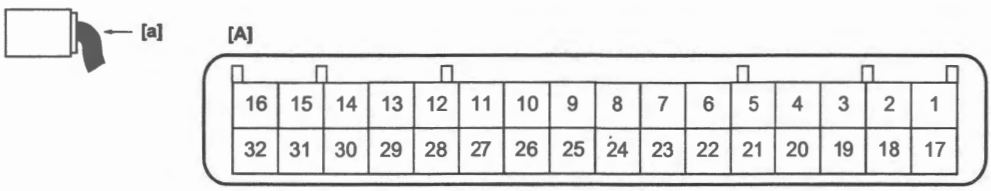

IL06L1930002-01

[A]: Combination meter coupler (View [a])

Component Location

Component Location

BENL06L29303001

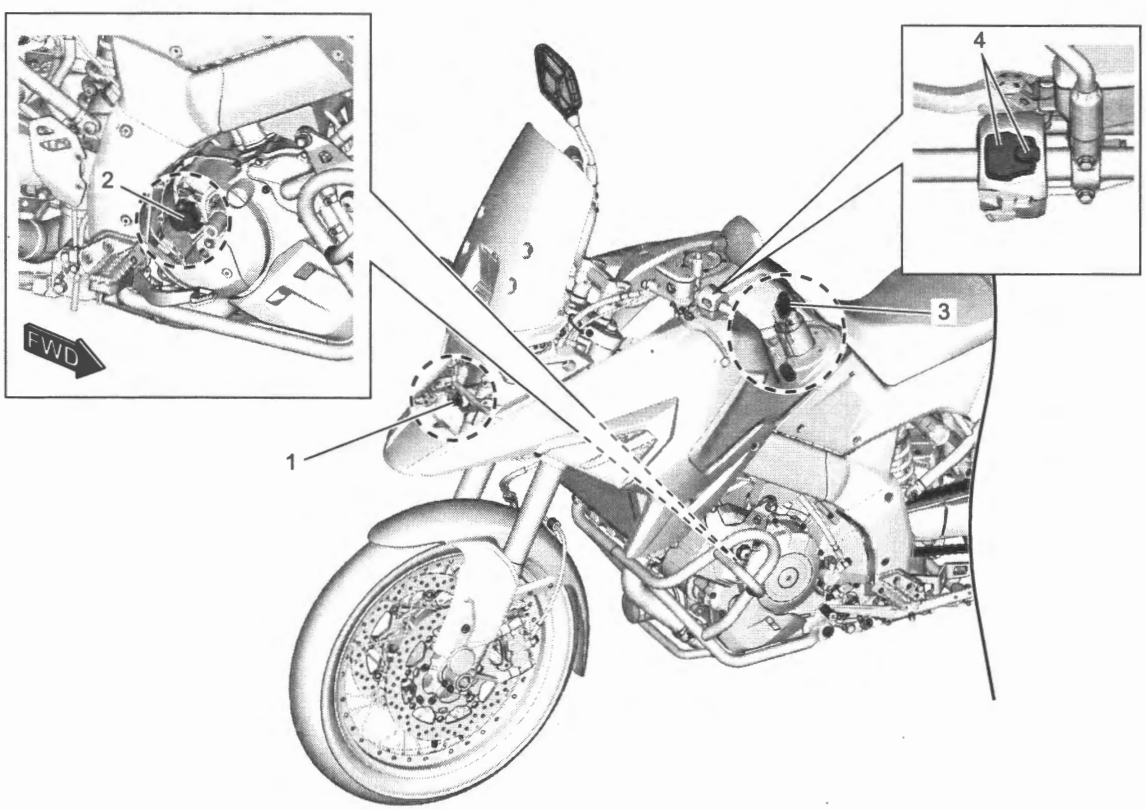

IL06L1930055-01

1. Ambient air temperature sensor	3. Fuel level sensor
2. GP sensor	4. Mode select switch

Diagnostic Information and Procedures

Combination Meter Symptom Diagnosis

BENL06L29304001

1) Check combination meter power and ground circuit.
2) Check DTC. ☞(Page 1A-11)
   - If some DTC appears during inspection in Step 2), go to applicable DTC diagnostic flow.
   - If any of troubles described in table below has occurred independently even though DTC display is normal during inspection is Step 2), inspect subject place according to instructions in table below.

Condition	Possible cause	Correction / Reference Item
Speedometer does not operate	Defective front wheel speed sensor.	*Check front wheel speed sensor. ☞(Page 4E-58)*
	Defective speedometer.	*Check speedometer. ☞(Page 9C-17)*
	ECM	*Check ECM. ☞(Page 1A-73)*
	Front wheel speed sensor circuit	*Repair circuit. ☞(Page 9A-5)*
Fuel level indicator does not operate	Fuel level gauge	*Check fuel level sensor. ☞(Page 9C-17)*
	Fuel level indicator	*Check fuel level indicator. ☞(Page 9C-16)*
	Fuel level gauge circuit	*Repair circuit. ☞(Page 9A-5)*
Oil pressure indicator light does not operate	Oil pressure switch	*Check oil pressure switch. ☞(Page 9C-19)*
	Oil pressure indicator	*Check oil pressure indicator. ☞(Page 9C-19)*
	Oil pressure switch circuit	*Repair circuit. ☞(Page 9A-5)*
Engine coolant temperature indicator does not operate	ECT sensor	*Check ECT sensor. ☞(Page 1C-6)*
	ECT indicator	*Check ECT indicator. ☞(Page 9C-14)*
	ECT sensor circuit	*Repair circuit. ☞(Page 9A-5)*
GP indicator does not operate	Faulty GP switch.	*Check GP switch.*
	Faulty GP indicator.	*Check GP switch. Refer to ☞(Page 5B-11).*
	Faulty GP switch circuit.	*Repair circuit. ☞(Page 9A-5)*
Ambient air temperature indicator	Ambient air temperature sensor	*Check ambient air temperature sensor. ☞(Page 9C-18)*
	Ambient air temperature indicator	*Check ambient air temperature indicator. ☞(Page 9C-18)*
	Ambient air temperature sensor circuit	*Repair circuit. ☞(Page 9A-5)*
Indicator light does not operate	Faulty switch or sensor.	*Check switch or sensor.* • *Turn signal switch: ☞(Page 9B-12)* • *GP switch: ☞(Page 5B-11)* • *Dimmer/passing light switch: ☞(Page 9B-13)* • *Oil pressure switch: ☞(Page 1E-7)* • *ECT sensor: ☞(Page 1C-6)*
	Faulty wiring or grounding.	*Repair wiring. ☞(Page 9A-5)*
	Faulty combination meter unit (LED).	*Replace combination meter unit. ☞(Page 9C-16)*

Horn Symptom Diagnosis

BENL06L29304002

Condition	Possible cause	Correction / Reference Item
Horn does not operate	Faulty horn switch	*Check horn switch. ☞(Page 9C-19)*
	Faulty wiring or grounding	*Repair circuit.*
	Faulty horn	*Check horn. ☞(Page 9C-19)*

Multifunction Display indicates "Air!"

BENL06L29304003

Possible Cause
Ambient Air Temperature Sensor Related Malfunction
• Ambient air temperature sensor circuit open or short.
• Faulty ambient air temperature sensor.

Wiring Diagram

Refer to "Combination Meter Circuit Diagram" (Page 9C-1).

Troubleshooting

Step 1

ET sensor power supply voltage check

1) Turn the ignition switch OFF.
2) Disconnect the ambient air temperature sensor coupler. ☞(Page 9C-17)
3) Check for proper terminal connection to the ambient air temperature sensor coupler (1).
4) If connections are OK, turn the ignition switch ON.
5) Measure the voltage between the "T2" and ground.
6) If OK, measure the voltage between the "T1" and "T2" wire.

Ambient air temperature sensor power supply voltage
[Standard]: 4.5 – 5.5 V

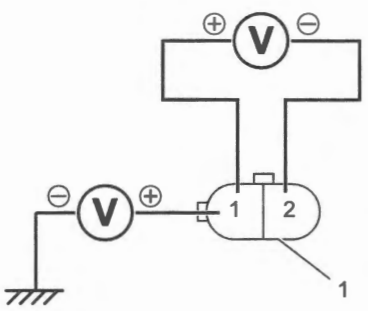

IL06L1930024-02

Is check result OK?

Yes Go to Step 3.

No Go to Step 2.

Step 2

Ambient air temperature sensor signal circuit and ground circuit check

1) Turn the ignition switch OFF.
2) Disconnect the combination meter coupler. ☞(Page 9C-16)
3) Check for proper terminal connection to the combination meter coupler.
4) If connections are OK, check the following points.
   - Resistance
     - Between "T1" at the ambient air temperature coupler (1) and "T28" at the combination meter coupler (2): less than 1 Ω
     - Between "T2" at the ambient air temperature coupler r and "T30" at the combination meter coupler: less than 1 Ω

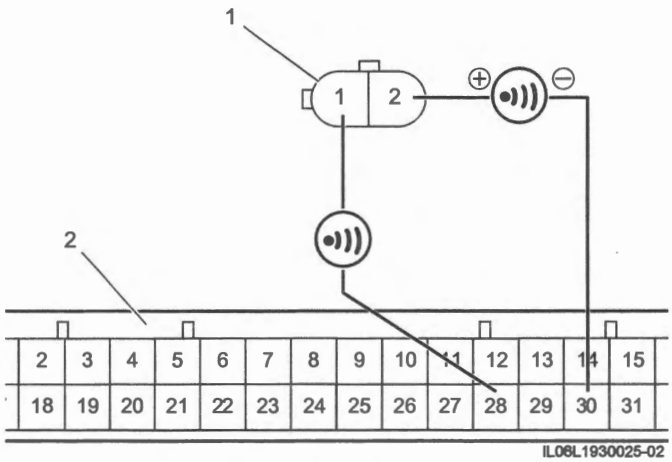

IL06L1930025-02

   - Between "T1" at the ambient air temperature coupler (1) and ground: infinity
   - Between "T2" at the ambient air temperature coupler and ground: infinity

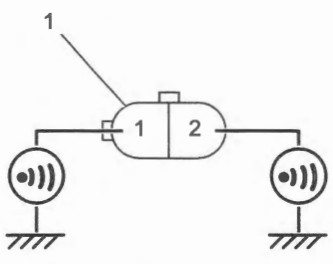

IL06L1930026-01

   - Between "T1" and "T2" at the ambient air temperature coupler (1): infinity

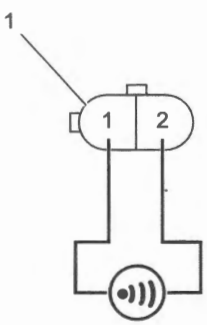

IL06L1930027-01

- Voltage
  - Turn the ignition switch ON.
  - Between "T1" at the ambient air temperature coupler (1) and ground: approx. 0 V
  - Between "T2" at the ambient air temperature coupler and ground: approx. 0 V

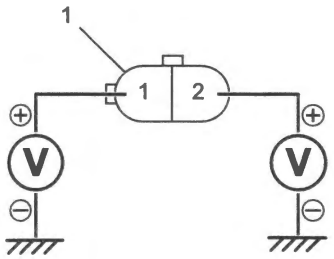

IL06L1930028-01

Is check result OK?

Yes — Replace the combination meter with a known good one, and inspect it again. ☞(Page 9C-16)

No — Repair or replace the defective wire harness.

Step 3

Ambient air temperature sensor resistance check

1) Turn the ignition switch OFF.
2) Measure the ambient air temperature sensor resistance. ☞(Page 9C-18)

Is check result OK?

Yes — Replace the combination meter with a known good one, and inspect it again. ☞(Page 9C-16)

No — Replace the ambient air temperature sensor with a new one. ☞(Page 9C-18)

Multifunction Display indicates "SW!"

BENL06L29304004

Possible Cause
Handle switch Related Malfunction
• Faulty handle switch, combination meter or ECM.
• Handle switch circuit short.

Wiring Diagram

Refer to "Combination Meter Circuit Diagram" (Page 9C-1).

Troubleshooting

Step 1

1) Remove the air cleaner box. ☞(Page 1D-6)
2) Disconnect the left handle switch coupler (1) as shown in the figure.

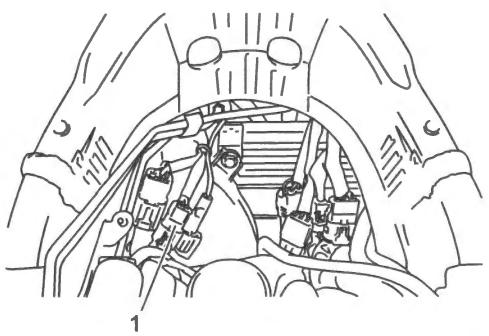

IL06L1930029-04

Does the indicator "SW!" go off?

Yes — Replace the left handle switch with a known good one, and inspect it again. ☞(Page 6B-7)

No — Go to Step 2. (For DL1050RC)
Go to Step 3. (For DL1050RQ)

Step 2

1) Disconnect the throttle grip assembly coupler (1) as shown in the figure.

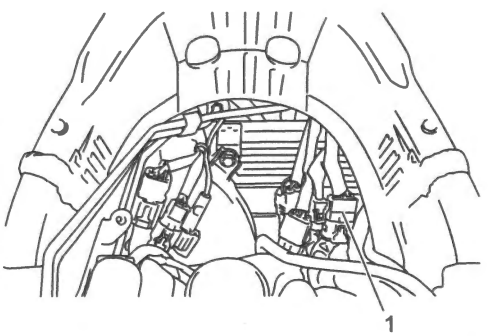

IL06L1930030-04

Does the indicator "SW!" go off?

Yes — Replace the throttle grip assembly with a known good one, and inspect it again. ☞(Page 6B-7)

No — Go to Step 3.

Step 3

1) Turn the ignition switch OFF.
2) Disconnect the left handle switch coupler (1) as shown in the figure.

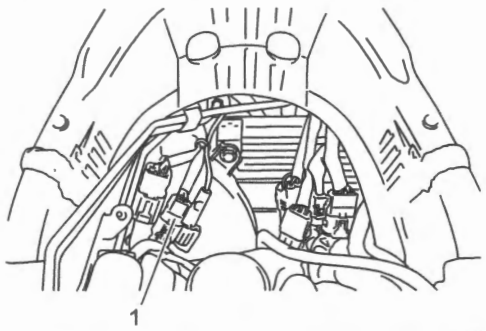

IL06L1930029-04

3) Check for proper terminal connection to the ECM coupler.
4) If connections are OK, check the following points.
   - Resistance
     - Between "T1" and "T3" at the left handle switch coupler: infinity
     - Between "T1" and "T4" at the left handle switch coupler: infinity
     - Between "T1" and "T8" at the left handle switch coupler: infinity

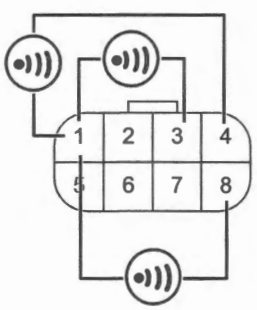

IL06L1930032-01

Is check result OK?

Yes
- Go to Step 4. (For DL1050RC)
- Replace the combination meter and/or ECM with a known good one, and inspect it again. (For DL1050RQ)
  - Combination meter ☞(Page 9C-16)
  - ECM ☞(Page 1C-2)

No — Repair or replace the defective wire harness.

Step 4

1) Disconnect the throttle grip assembly coupler (1) as shown in the figure. ☞(Page 6B-6)

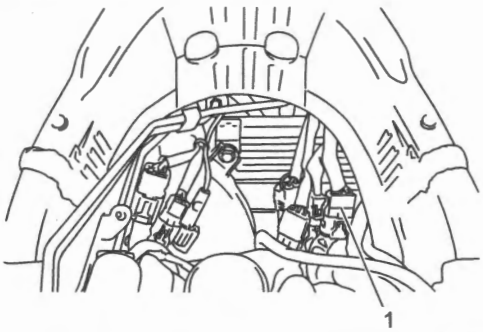

IL06L1930030-04

2) Check for proper terminal connection to the ECM coupler.
3) If connections are OK, check the following points.
   - Resistance
     - Between "T1" and "T9" at the throttle grip assembly coupler: infinity

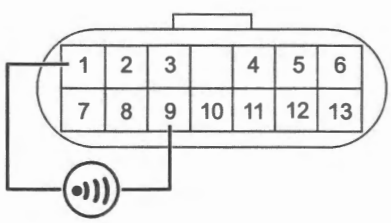

IL06L1930033-01

Is check result OK?

Yes
- Replace the combination meter and/or ECM with a known good one, and inspect it again.
  - Combination meter ☞(Page 9C-16)
  - ECM ☞(Page 1C-2)

No — Repair or replace the defective wire harness.

Repair Instructions

Combination Meter Construction

BENL06L29306001

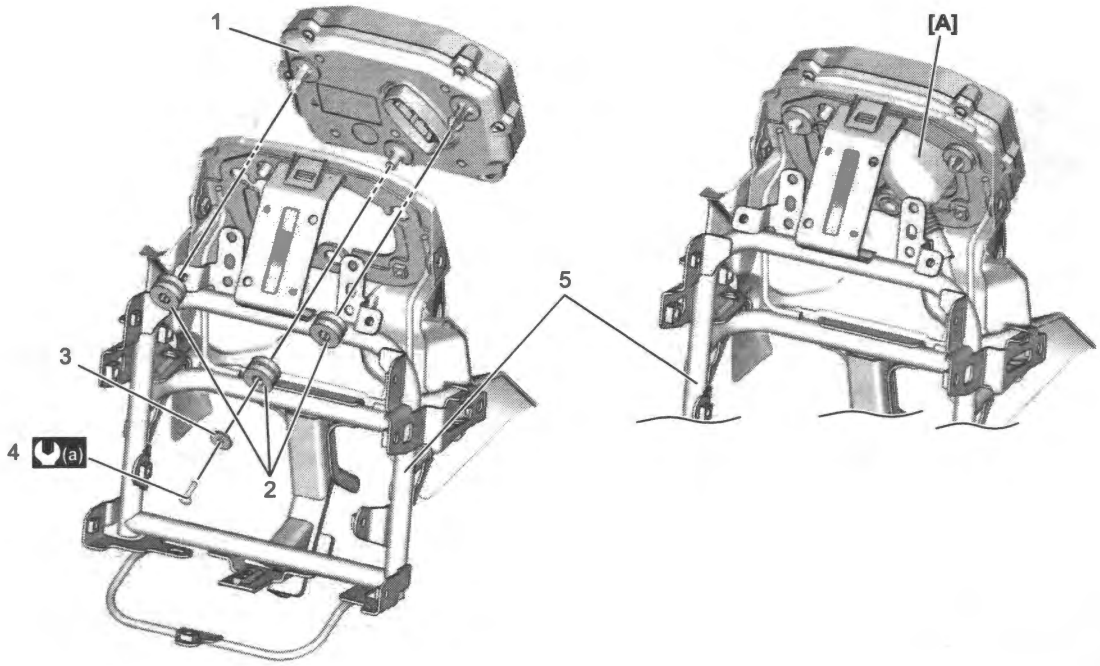

IL06L1930005-02

[A]: Fit the coupler boot to the combination meter until it contacts bottom of the meter lower case.	4. Combination meter mounting screw
1. Combination meter	5. Cowling brace
2. Cushion	(a) : 1.5 N·m (0.15 kgf-m, 1.10 lbf-ft)
3. Washer	

Ambient Air Temperature Sensor Construction

BENL06L29306002

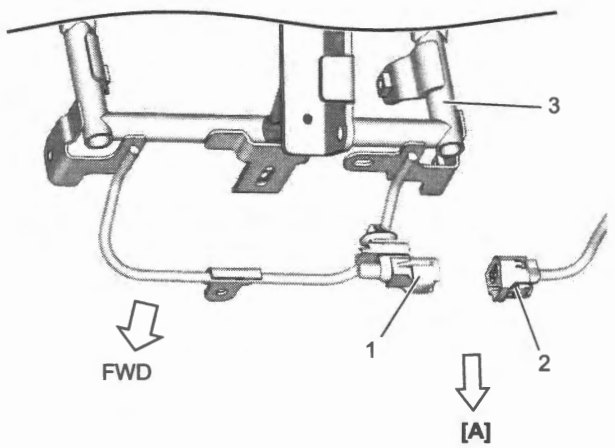

IL06L1930006-01

[A]: Downward	2. Harness No.2
1. Ambient temperature sensor	3. Cowling brace

Combination Meter Components

BENL06L29306003

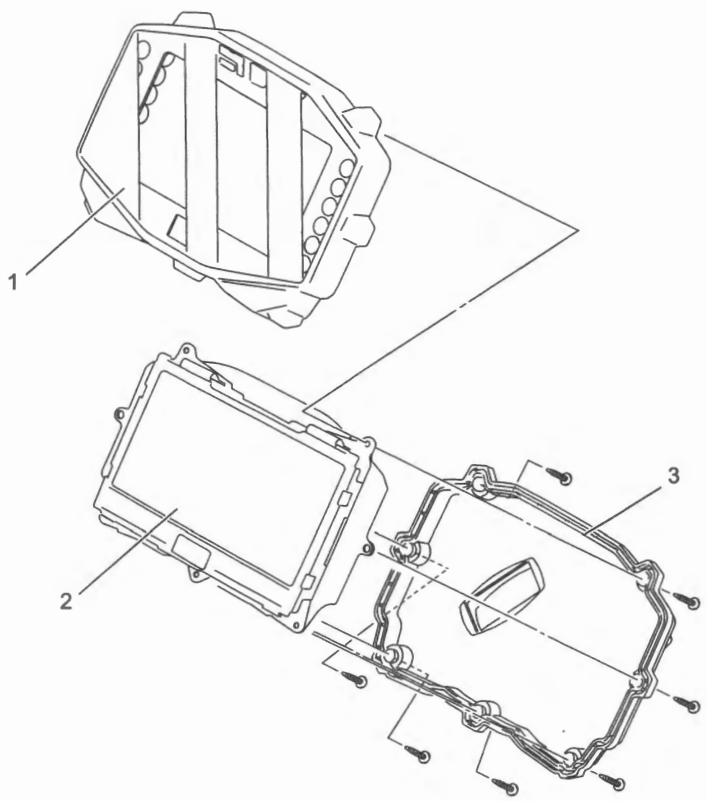

IL06L1930056-01

1. Upper case	3. Lower case
2. Combination meter unit	

Combination Meter On-Vehicle Inspection

BENL06L29306004

Check that the LEDs (MIL (1), ABS indicator light (2), Engine rpm indicator light (3), TC indicator light (4), Engine coolant temperature / Oil pressure / Battery voltage warning indicator light (5), Freeze indicator light (6) and Master warning indicator light (7), Cruise control indicator light (8)) immediately lights up when the ignition switch is turned to ON.
Check that other LEDs (Neutral indicator light (9), Turn signal indicator lights (10) and High beam indicator light (11)) light up/go off by operating the gearshift lever, dimmer and turn signal switches.
If ABS indicator light dose not light up, replace the ABS control unit /HU and/or combination meter with a new one after checking its wire harness/coupler.

- ABS control unit /HU: ☞(Page 4E-54)
- Combination meter: ☞(Page 9C-16)

If abnormal condition is found in other indicators, replace the combination meter unit with a new one after checking its wire harness/coupler. ☞(Page 9C-16)

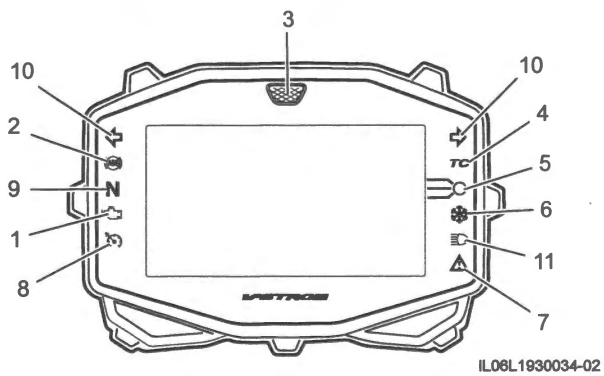

IL06L1930034-02

Service Reminder Reset

BENL06L29306005

NOTE

- **Before set up the service reminder, check that the multifunction display indicates the current calendar.**
- **The date and distance inputted in the service reminder will not be reset even if the battery cable is disconnected.**

1) Remove the rear seat. ☞(Page 9D-27)
2) Connect the special tool to the mode select coupler (6P) (1) at the wiring harness.

Special tool
(A): 09930–83130

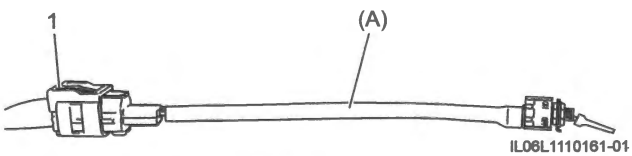

IL06L1110161-01

3) Turn the ignition switch ON.
4) Press the select switch (UP) for about 2 seconds to switch the screen to "MENU".

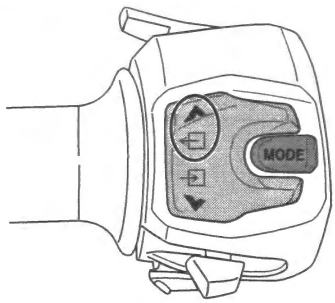



IL06L1930009-01

5) Press the select switch (UP or DOWN) to select "SERVICE".

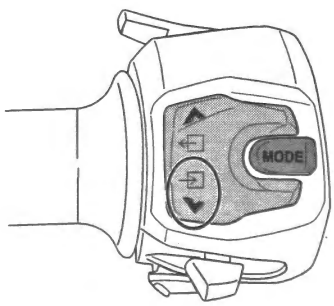

IL06L1930018-02

- Before the service reminder indicator comes on:

NOTE

In this initial screen, 1000 km (600 mile) is shown but the date is not shown.

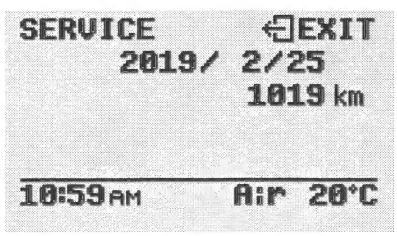

IL06L1930057-01

- When the service reminder indicator comes on:

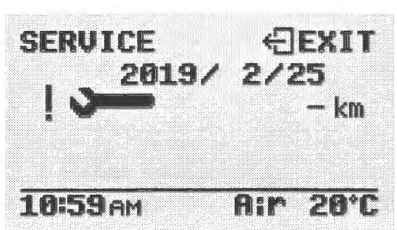

IL06L1930011-01

6) Turn the special tool's switch ON and "RESET" appears on the screen.



I718H1450040-03

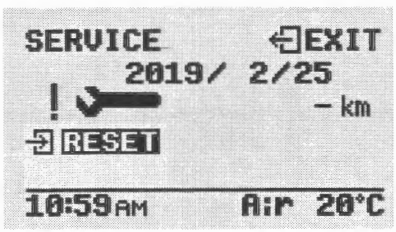

IL06L1930014-01

7) By pressing the select switch (DOWN) for about 2 seconds, "YES" and "NO" appear on the screen.

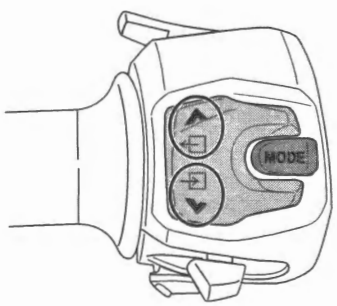

IL06L1930016-01

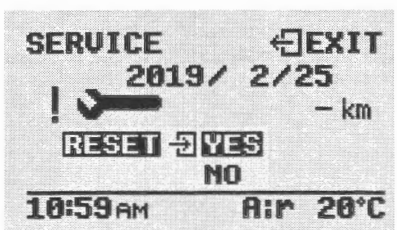

IL06L1930017-02

8) Press the select switch (UP or DOWN) to select "YES".

9) Press the select switch (DOWN) for about 2 seconds to select month, day and distance to setting screen.

NOTE

If "NO" is selected and press the select switch (DOWN) for about 2 seconds or press the select switch (UP) for about 2 seconds, the screen returns to Step 7).

10) Press the select switch (UP or DOWN) to select month, day, distance and "SET" indication. The selected item is highlighted.

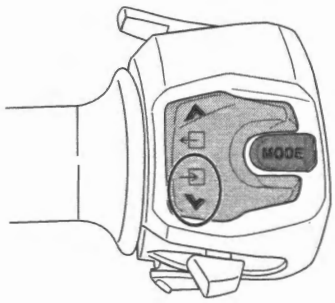

IL06L1930018-02

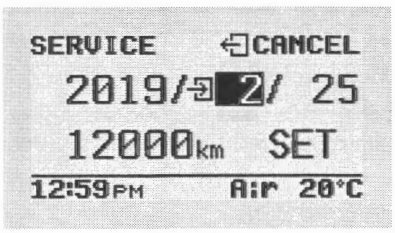

IL06L1930019-01

11) Press the select switch (DOWN) for about 2 seconds to make arrow marks appear above and below the indication.

NOTE

Even if the special tool's switch is set OFF, the setting mode continues.

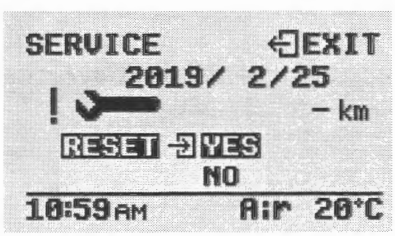

IL06L1930017-02

12) Press the select switch (UP or DOWN) to set month, day and distance indications.

NOTE

- **Month can be selected from present month plus within one year in 12 steps. Example (if this month is 2017/5): Possible setting is 2018/5 – 2017/6.**
- **Day can be selected within the range of 1 – 31.**
- **Distance can be selected within 1000 – 12000 km in every 1000 km or 600 mile and within 1000 – 7500 mile in every 500 mile.**

13) Press the select switch (DOWN) for about 2 seconds. The arrow marks above and below the indication disappear and the setting is confirmed.

NOTE

If the following conditions appear, the setting data is canceled.

- **Ignition switch is OFF.**
- **The setting operation is suspended for one minute**
- **Speed sensor signal is imputed and the display is changed automatically.**

14) Press the select switch (UP or DOWN) to select "SET".

15) Press the select switch (DOWN) for about 2 seconds and the service reminder setting is confirmed before returning to setting screen in Step 7).

16) Turn the ignition switch OFF and disconnect the special tool.

17) Install the removed parts.

Traction Control System Indicator / SUZUKI DRIVE MODE SELECTOR (SDMS) Indicator / ABS Mode Indicator Inspection

BENL06L29306006

Check that the traction control indicator light immediately lights up when the ignition switch is turned to ON.
Check that the traction control indicator light goes out when riding the motorcycle at more than 5 km/h (3 mile/h).
Check that the indicators change the indication when the mode switch (1) and select switch (2) are operated respectively.
If any abnormality is found, check the select switch, mode switch and wire harness, and replace the ECM and / or ABS control unit /HU with a known good one, and then check again that the indicators change the indication when the select switch and mode switch are operated.
If any abnormality is still found, replace the combination meter.

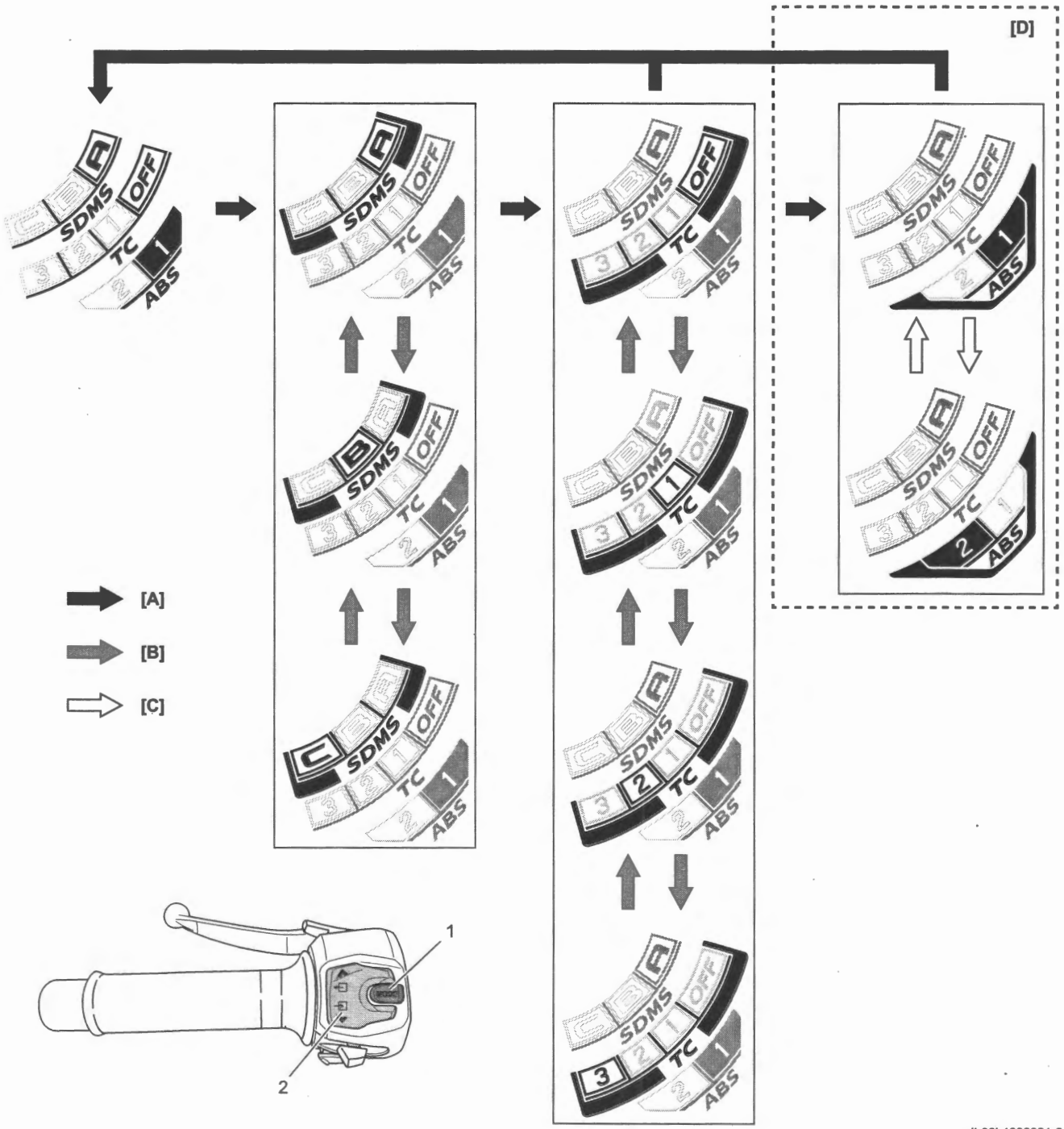

IL06L1930021-04

[A]: When mode switch is pushed.	[C]: When select switch (UP or DOWN) is pushed for about 2 seconds.
[B]: When select switch (UP or DOWN) is pushed.	[D]: With ABS mode select function model

ECT Indicator Inspection

BENL06L29306007

1) Disconnect the ECT sensor coupler. ☞(Page 9C-16)
2) Connect the variable resistor (1) between the terminals.
3) Turn the ignition switch ON.

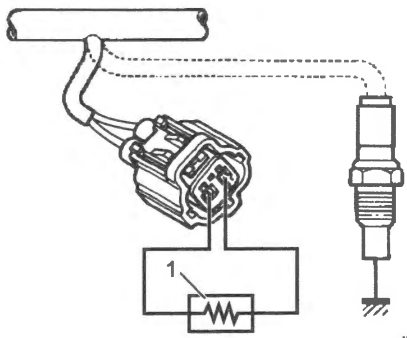

ID26J1930009-01

4) Check the LCD operation when the resistance is adjusted to the specified values.
If either one or all indications are abnormal, replace the combination meter with a new one. ☞(Page 9C-16)

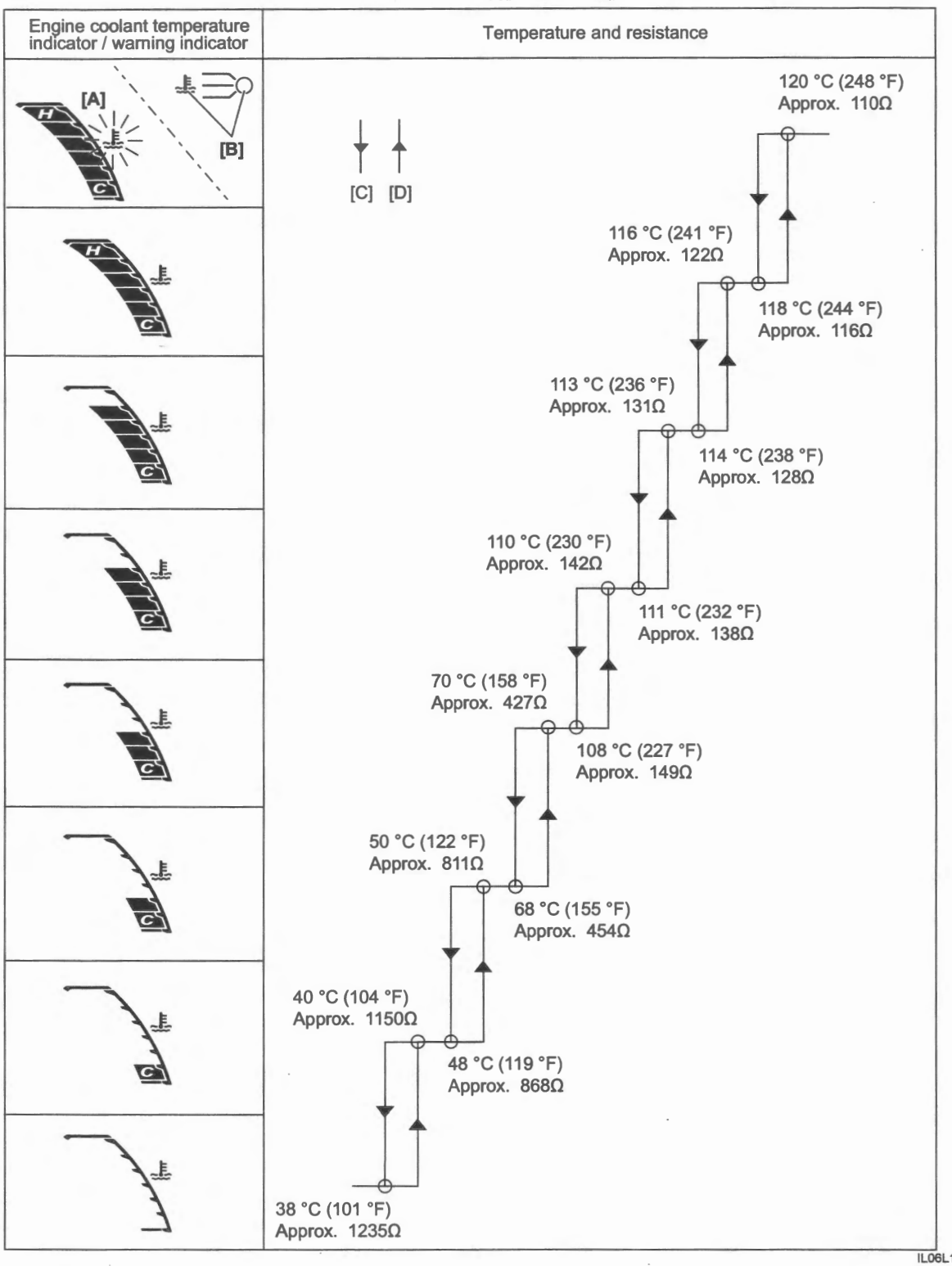

IL06L1930035-01

[A]: Flicker	[C]: When decreasing the temperature
[B]: ON	[D]: When increasing the temperature

5) After finishing the fuel level indicator inspection, reinstall the removed parts.

Combination Meter Removal and Installation

BENL06L29306008

Removal

1) Remove the headlight. ☞(Page 9B-4)
2) Disconnect the meter coupler (1) and remove the meter (2).

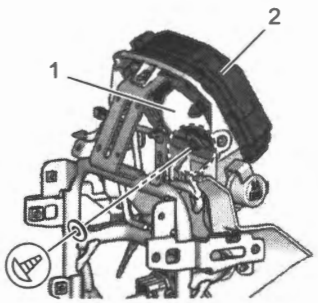

IL06L1930036-02

Installation

Install the combination meter in the reverse order of removal. Pay attention to the following points:

- Tighten the combination screw (1) to the specified torque.

Tightening torque
Combination meter screw (a): 1.5 N·m (0.15 kgf-m, 1.0 lbf-ft)

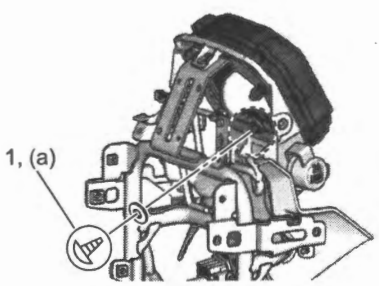

IL06L1930054-01

- After installation of the combination meter, check the headlight aiming. ☞(Page 9B-4)

Combination Meter Disassembly and Reassembly

BENL06L29306009

Disassemble/reassemble the combination meter as shown in the combination meter components. ☞(Page 9C-9)

ECT Sensor Removal and Installation

BENL06L29306010

Refer to "ECT Sensor Removal and Installation" in Section 1C (Page 1C-6).

Fuel Level Indicator Inspection

BENL06L29306011

1) Disconnect the fuel pump coupler. ☞(Page 1G-7)
2) Connect a variable resistor (1) between the T3 and T4 of the fuel pomp coupler.

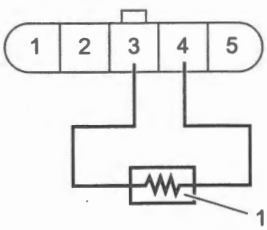

IL06L1930038-01

3) Turn the ignition switch ON.
4) Check the display of fuel level indicator (LCD) as shown in the figure.
   If any abnormality is found, replace the combination meter with a new one. ☞(Page 9C-16)

NOTE

It takes approx. 40 seconds that the fuel level indicator indicates the detected fuel level.

Resistance	Fuel level indicator
172 – 186.2 Ω	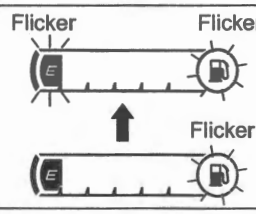
135.7 – 146.8 Ω	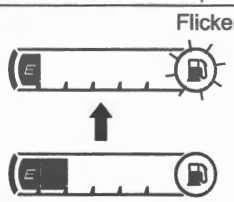
109.8 – 119.1 Ω	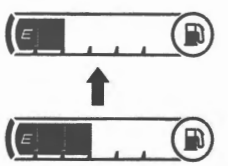
80.4 – 87.7 Ω	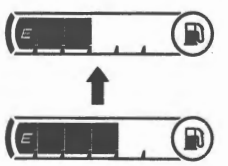
54.4 – 60.3 Ω	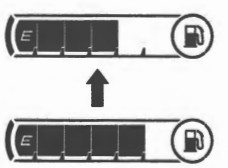
32.4 – 36.6 Ω	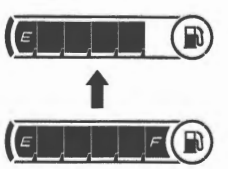

IL06L1930039-02

5) Connect the fuel pump coupler and reinstall the fuel tank. ☞(Page 1G-7)

Fuel Level Gauge Inspection

BENL06L29306012

Refer to "Fuel Tank Removal and Installation" in Section 1G (Page 1G-7).

Speedometer On-Vehicle Inspection

BENL06L29306013

If the speedometer, odometer or trip meter does not function properly, inspect the speed sensor and the coupler connections. If the speed sensor and coupler connections are OK, replace the combination meter unit with a new one. ☞(Page 9C-16)

Speed Sensor Removal and Installation

BENL06L29306014

Refer to "Front Wheel Speed Sensor Removal and Installation" in Section 4E (Page 4E-56) and "Rear Wheel Speed Sensor Removal and Installation" in Section 4E (Page 4E-57).

Speed Sensor Inspection

BENL06L29306015

Refer to "Wheel Speed Sensor and Sensor Rotor Inspection" in Section 4E (Page 4E-58).

Ambient Air Temperature Sensor Removal and Installation

BENL06L29306016

1) Remove the body center lower cowling (1).

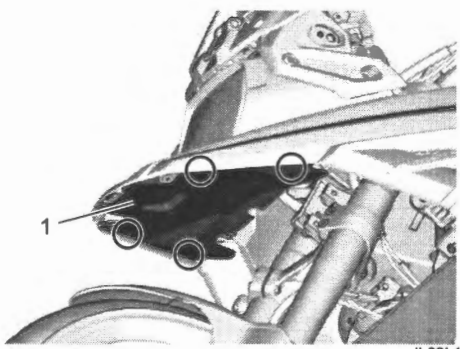

IL06L1930022-01

2) Disconnect the ambient air temperature sensor coupler (1) and remove the ambient air temperature sensor (2).

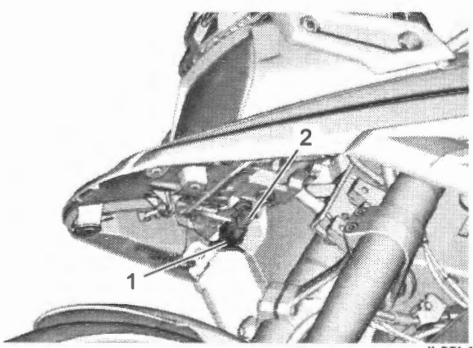

IL06L1930023-01

Freeze Indicator Light / Ambient Air Temperature Indicator Inspection

BENL06L29306017

1) Disconnect the ambient air temperature sensor coupler. ☞(Page 9C-17)
2) Connect the variable resistor (1) between the terminals at the ambient air temperature sensor coupler.

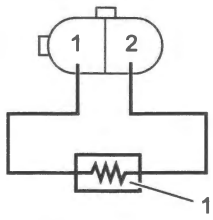

IL06L1930040-01

3) Turn the ignition switch ON.
4) Check the ambient air temperature meter (LCD) (1) and freeze indicator light (LED) (2) operations when the resistance is adjusted to the specified values. If either one or both indications are abnormal, replace the combination meter with a new one. ☞(Page 9C-16)

Resistance	LCD
Approx. 33000 Ω or more	—
Approx. 9300 – 33000 Ω	Lo
Approx. 600 – 9300 Ω	-10 – 50°C (14 – 122°F)
Approx. 162 - 600 Ω	HI
Approx. 162 Ω or less	—

Ambient air temperature indicator (LCD) (1)	Freeze indicator light (LED) (2)	Temperature
Air 3°C Air 38°F	Flicker	[A] [B] 5 °C (41°F) 3 °C (38 °F)
Air 5°C Air 41°F	OFF	

IL06L1930041-02

[A]: When increasing the temperature
[B]: When decreasing

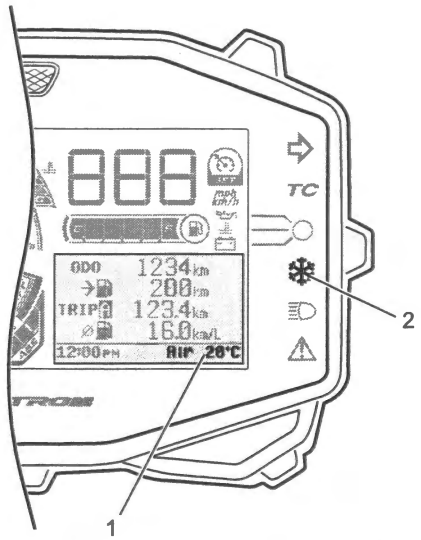

IL06L1930042-01

5) Connect the ambient air temperature sensor coupler.

Ambient Air Temperature Sensor Inspection

BENL06L29306018

Refer to "Freeze Indicator Light / Ambient Air Temperature Indicator Inspection" (Page 9C-18).
Measure the resistance between terminals of ambient air temperature sensor.
If any abnormality is found, replace the ambient air temperature sensor with a new one.

NOTE

Ambient air temperature sensor resistance measurement method is the same way as that of the ECT sensor. ☞(Page 1C-6)

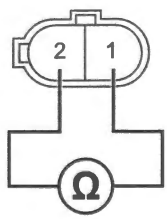

IL06L1930043-01

Ambient air temperature sensor resistance

Temperature	Standard resistance
–20 °C (–4 °F)	13779 –19083 Ω
–10 °C (14 °F)	8100 –10609 Ω
0 °C (32 °F)	4928 – 6125 Ω
10 °C (50 °F)	3089 – 3656 Ω
20 °C (68 °F)	1992 – 2251 Ω
25 °C (77 °F)	1615 – 1785 Ω
30 °C (86 °F)	1290 – 1456 Ω
40 °C (104 °F)	838 – 986 Ω

Oil Pressure Indicator Inspection

BENL06L29306019

NOTE

Before inspecting the oil pressure switch, check the engine oil level. ☞(Page 1E-4)

1) Remove the under cover (LH). (If equipped) ☞(Page 9E-7)
2) Disconnect the oil pressure switch lead wire (1) from the oil pressure switch.

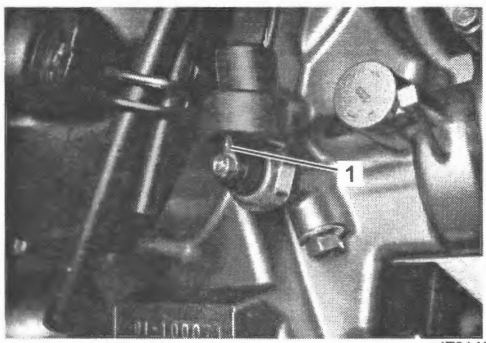

IE31J1930017-02

3) Turn the ignition switch ON.
4) Check if the warning indicator light (LED) (2) will light up and indicate the oil pressure indicator (LCD) (3) when grounding the lead wire (1).
If the oil pressure indicator does not light up, replace the combination meter with a new one after checking the connection of couplers.

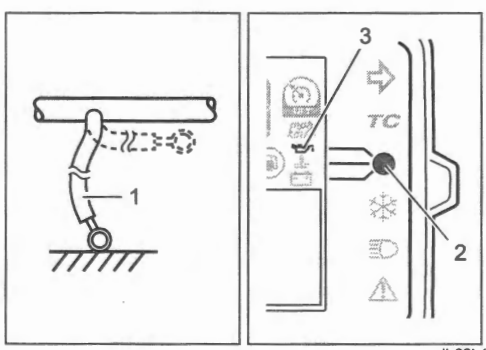

IL06L1930045-02

5) Install the under cowling assembly. (If equipped)

Horn Inspection

BENL06L29306020

Horn Button Inspection

1) Remove the air cleaner box. ☞(Page 1D-6)
2) Disconnect the left handlebar switch coupler (1).

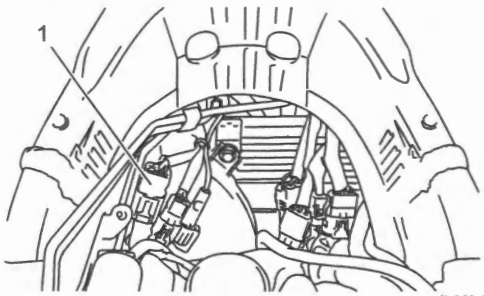

IL06L1930046-03

3) Inspect the horn button for continuity with a tester. If any abnormality is found, replace the left handlebar switch assembly with a new one. ☞(Page 6B-3)

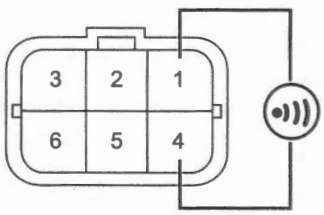

IL06L1930047-01

Color / Position	T1	T4
•		
PUSH	○	○

IL06L1930048-01

4) After finishing the horn button inspection, reinstall the removed parts.

Horn Inspection

Refer to "Horn Removal and Installation" (Page 9C-20).
Connect a 12 V battery between the terminals at the horn.
If the sound is not heard from the horn, replace the horn with a new one.

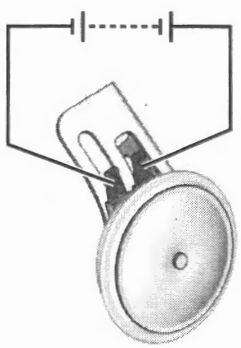

IL06L1930049-01

Horn Removal and Installation

BENL06L29306021

Removal

1) Remove the side cover assembly. ☞(Page 9D-33)
2) Remove the side inner upper cover. ☞(Page 9D-36)
3) Disconnect the horn couplers (1).
4) Remove the horn (2).

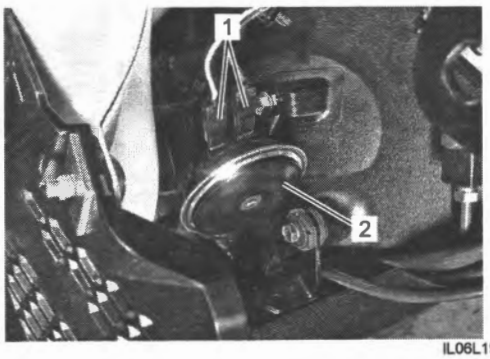

IL06L1930050-02

Installation

Install the horn in the reverse order of removal.

Mode Switch Inspection

BENL06L29306022

1) Turn the ignition switch OFF.
2) Remove the air cleaner box. ☞(Page 1D-6)
3) Disconnect the left handle switch coupler (1) as shown in the figure.

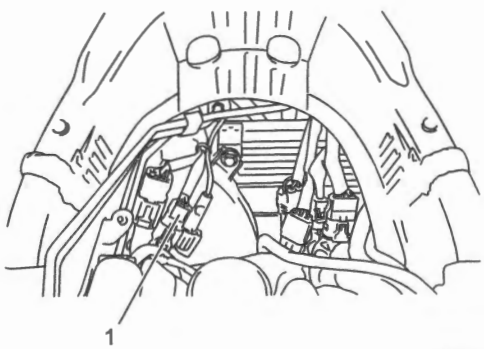

IL06L1930053-02

4) Inspect the mode switch for continuity with a multi circuit tester.
   If any abnormality is found, replace the left handle switch with a new one. Refer to "Handlebar Removal and Installation" in Section 6B (Page 6B-3).



Color / Position	T1	T3
FREE		
PUSH	○	○

IL06L1930052-01

5) Connect the left handle switch coupler. Refer to "Wiring Harness Routing Diagram" in Section 9A (Page 9A-23).
6) Install the air cleaner box. ☞(Page 1D-6)

Select Switch Inspection

BENL06L29306023

1) Turn the ignition switch OFF.
2) Remove the air cleaner box. ☞(Page 1D-6)
3) Disconnect the left handle switch coupler (1).

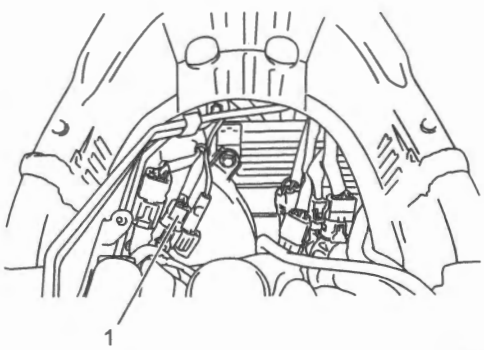

IL06L1930053-02

4) Inspect the select switch for continuity with a multi circuit tester.
If any abnormality is found, replace the left handle switch with a new one. Refer to "Handlebar Removal and Installation" in Section 6B (Page 6B-3).

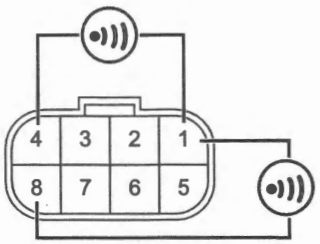

Color / Position	T1	T4	T8
UP	O	O	
FREE			
DOWN	O		O

IL06L1930058-01

5) Connect the left handle switch coupler. Refer to "Wiring Harness Routing Diagram" in Section 9A (Page 9A-23).
6) Install the air cleaner box. ☞(Page 1D-6)

Specifications

Tightening Torque Specifications

BENL06L29307001

Fastening part	Tightening torque			Note
	N·m	kgf-m	lbf-ft	
Combination meter screw	1.5	0.15	1.0	☞(Page 9C-16)

Reference:
For the tightening torques of fasteners not specified in this page, refer to:
"Combination Meter Construction" (Page 9C-8)
"Fasteners Information" in Section 0C (Page 0C-10)

Special Tools and Equipment

Special Tool

BENL06L29308001

09930–83130 Mode selection switch (ISO) ☞(Page 9C-10) 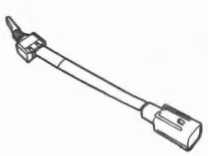	

Exterior Parts

Schematic and Routing Diagram

Seat Lock Cable Routing Diagram

BENL06L29402001

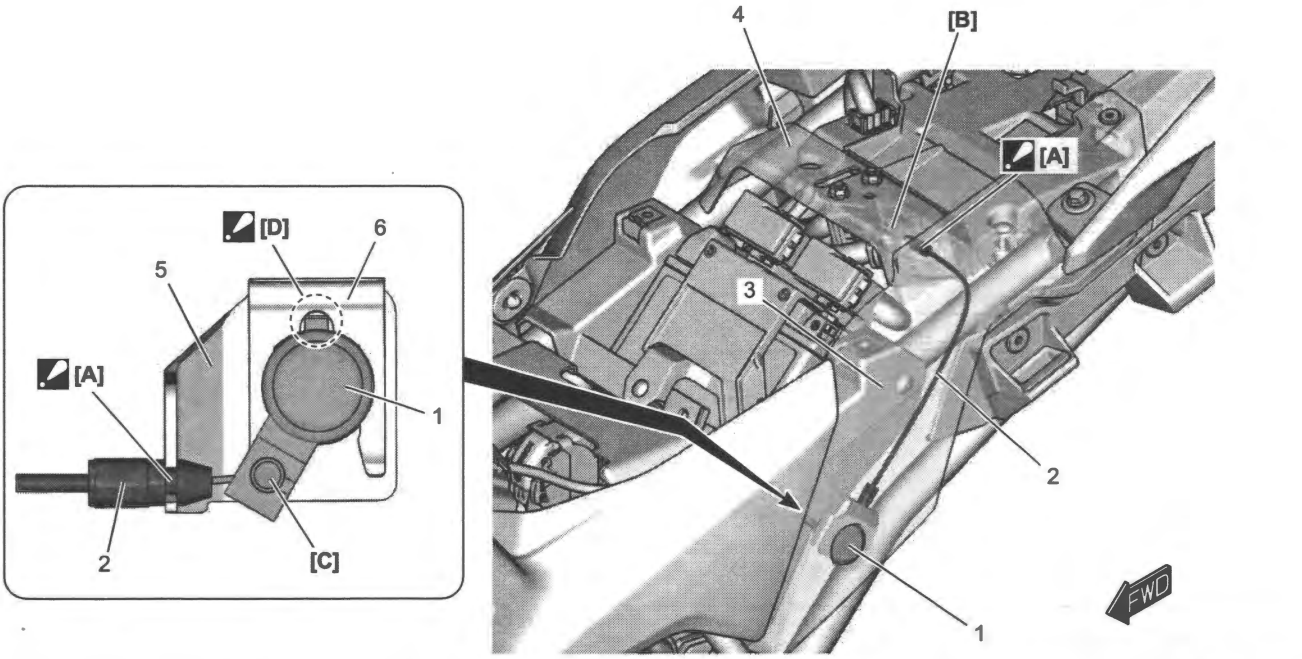

IL06L1940001-01

[A]: Set the seat lock cable firmly.	1. Seat lock assembly	5. Seat lock cable guide
[B]: Spherical cable end	2. Seat lock cable	6. Seat lock assembly plate
[C]: Cylindrical cable end	3. Frame front cover (LH)	
[D]: Align the rib of seat lock assembly and groove of each part.	4. Striker support bracket	

Component Location

Exterior Components Location

BENL06L29403001

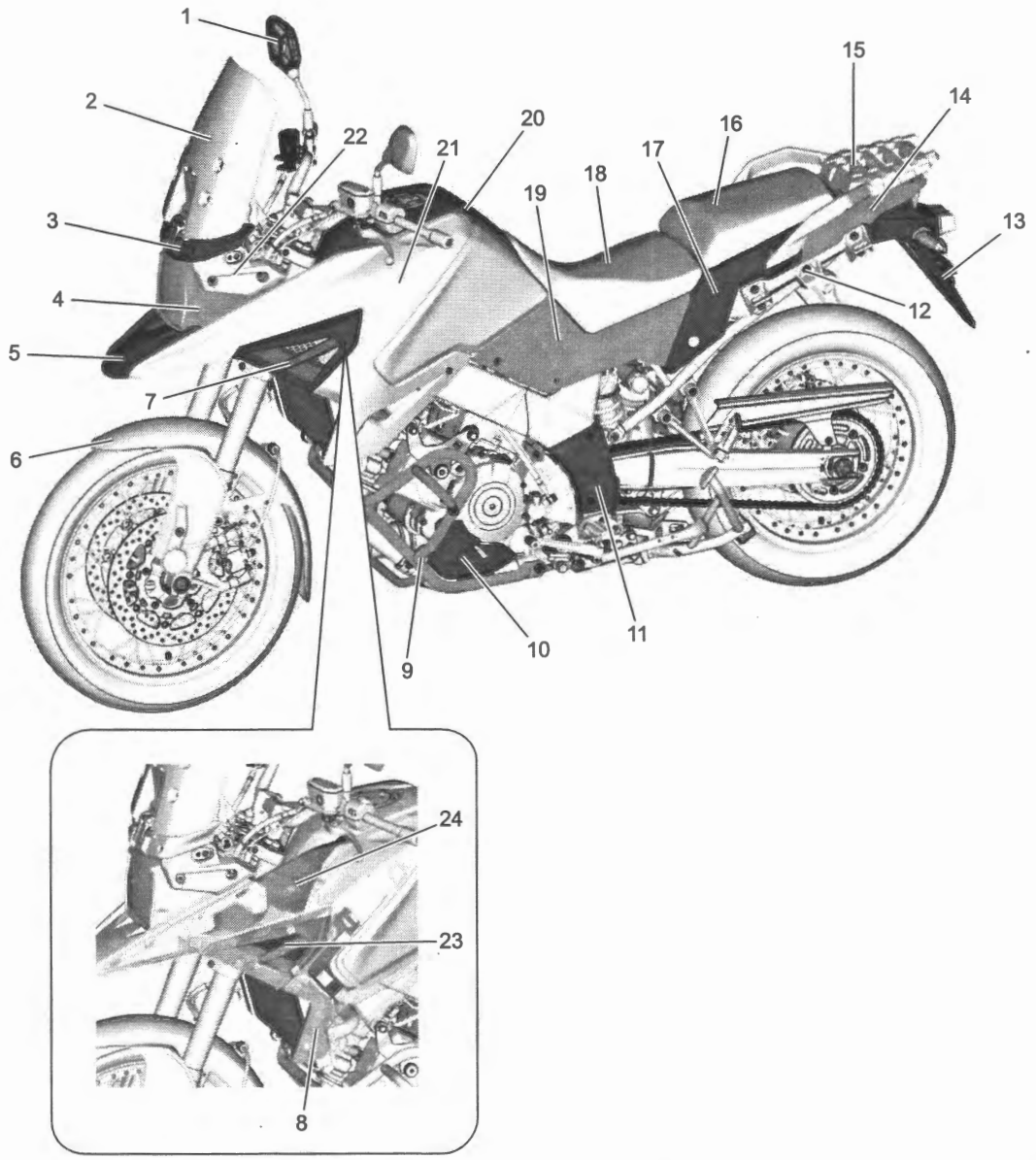

IL06L1940002-01

1. Rear view mirror	9. Accessory bar	17. Front Cover
2. Windscreen	10. Under cover	18. Front seat
3. Windscreen Cover	11. Pivot cover	19. Frame front cover
4. Body cowling	12. Rear Frame Cover (For DL1050RQ) Side case upper bracket (For DL1050RC)	20. Fuel tank center cover
5. Body center cowling	13. Rear fender rear	21. Side cover
6. Front fender	14. Frame center cover	22. Windscreen brace
7. Side cover No.2	15. Sport carrier	23. Fuel tank side cover bracket
8. Side inner lower cover	16. Rear seat	24. Side inner upper cover

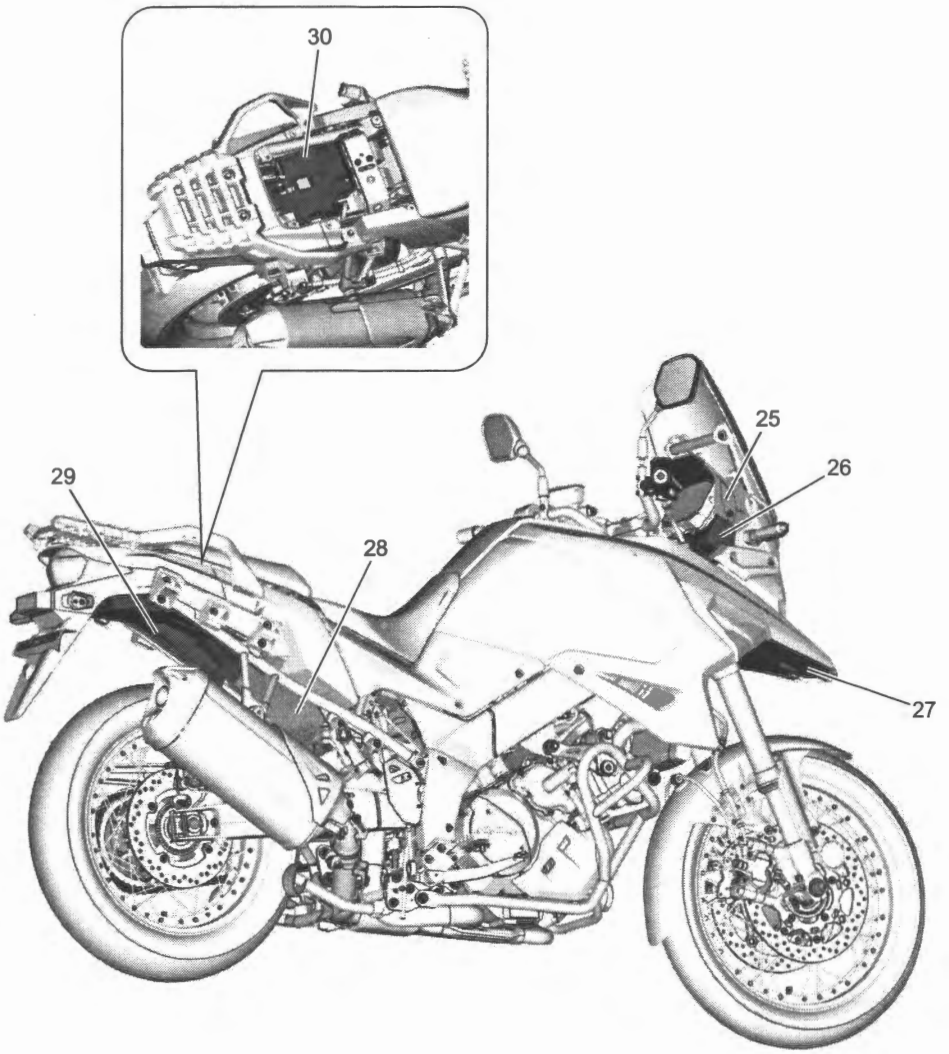

IL06L1940003-01

25. Meter front panel	27. Body center lower cowling	29. Rear fender front
26. Meter rear panel	28. Battery holder	30. Electric parts holder

Exterior Component Removal Chart

- This chart shows removal procedures for exterior component. Carry out each process following the arrow from left to right.
- Indicated number in the chart corresponds to the number in "Exterior Components Location" (Page 9D-2).
- The part shown by circled number (e.g. ①) can be removed from the vehicle individually.
- Adjoining part can be removed as a unit.
- Small white circle (○) indicates joining of the arrows.
  For removal of a part pointed by an arrow from a small white circle, all the part(s) in starting point of arrow(s) to the small white circle must be removed beforehand.
- Small black circle (●) indicates branching of the arrows.
  For removal of parts pointed by arrow(s) from a small black circle, choose an arrow corresponding to a target part to be removed.

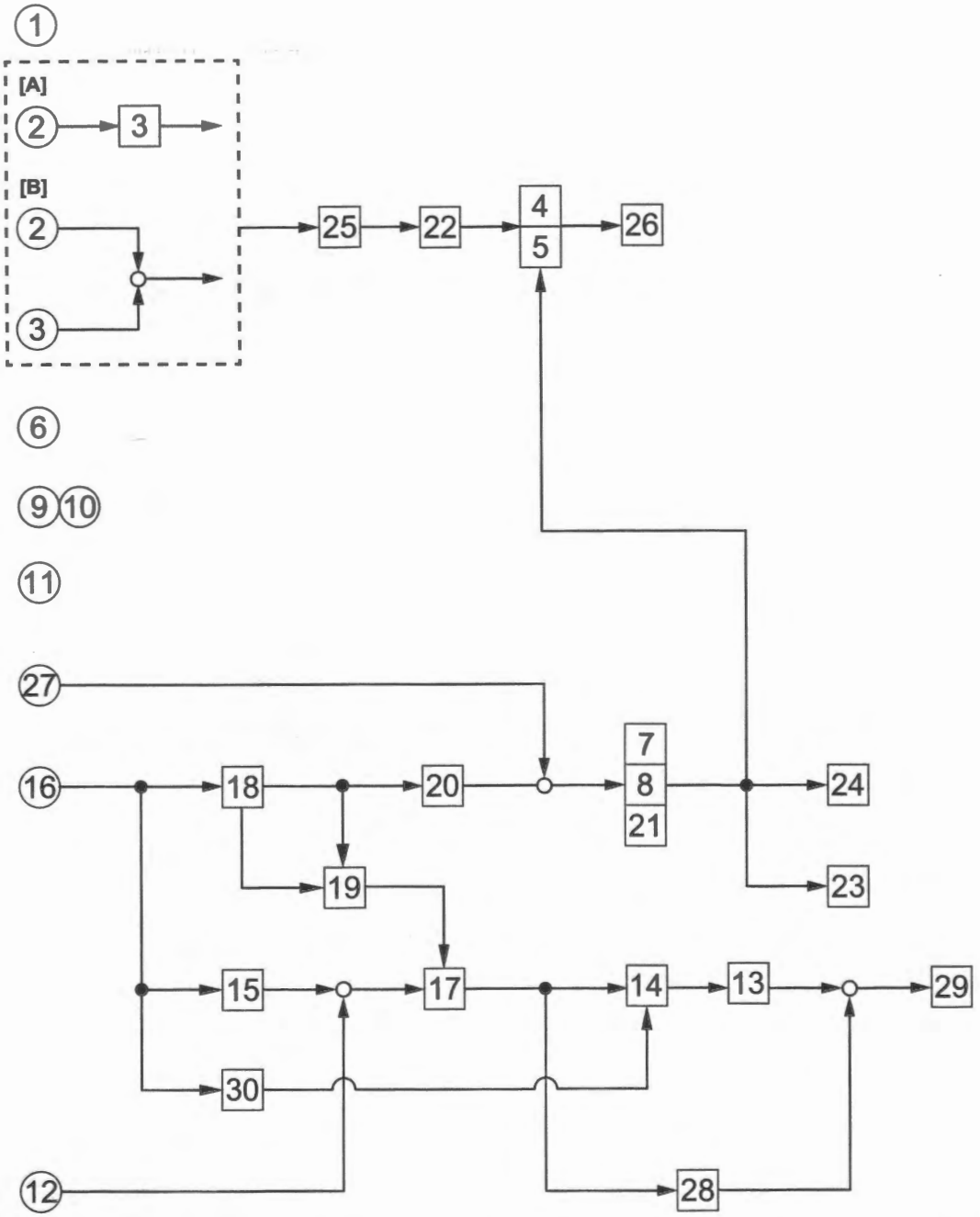

IL06L1940004-01

[A]: For DL1050RQ.	10. Under cover	21. Side cover
[B]: For DL1050RC.	11. Pivot cover	22. Windscreen brace
1. Rear view mirror	12. Rear Frame Cover (For DL1050RQ) Side case upper bracket (For DL1050RC)	23. Fuel tank side cover bracket
2. Windscreen	13. Rear fender rear	24. Side inner upper cover
3. Windscreen Cover	14. Frame center cover	25. Meter front panel
4. Body cowling	15. Sport carrier	26. Meter rear panel
5. Body center cowling	16. Rear seat	27. Body center lower cowling
6. Front fender	17. Frame cover	28. Battery holder
7. Side cover No.2	18. Front seat	29. Rear Fender Front
8. Side inner lower cover	19. Frame front cover	30. Electric parts holder
9. Accessory bar	20. Fuel tank center cover	

Repair Instructions

Body Cowling Construction

BENL06L29406001

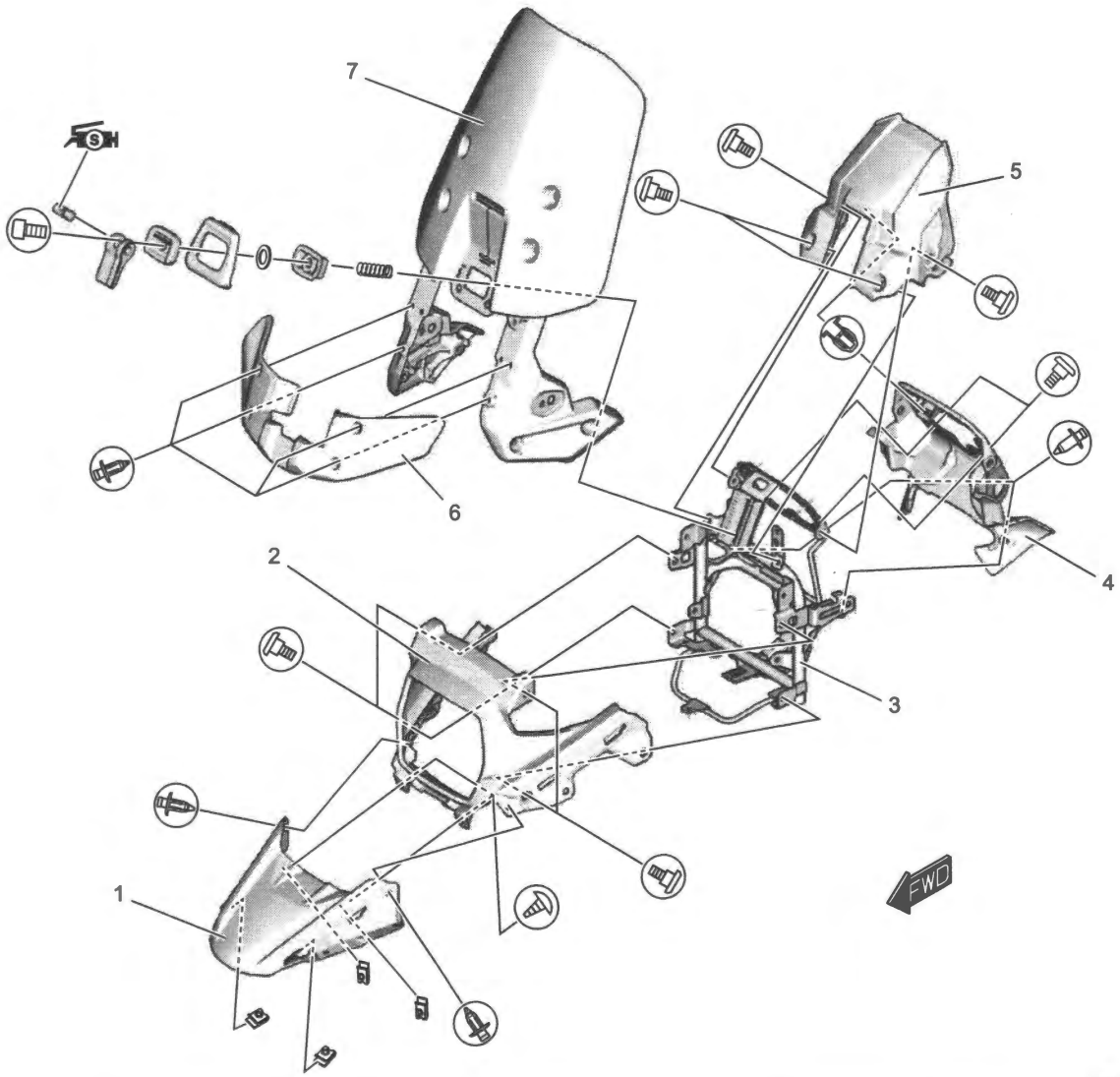

IL06L1940005-02

1. Body center cowling	4. Meter rear panel	7. Windscreen assembly
2. Body cowling	5. Meter front panel	SH : Apply silicone grease to sliding surface between windscreen lever hinge and windscreen lever.
3. Cowling brace	6. Windscreen cover	

Windscreen Construction

BENL06L29406002

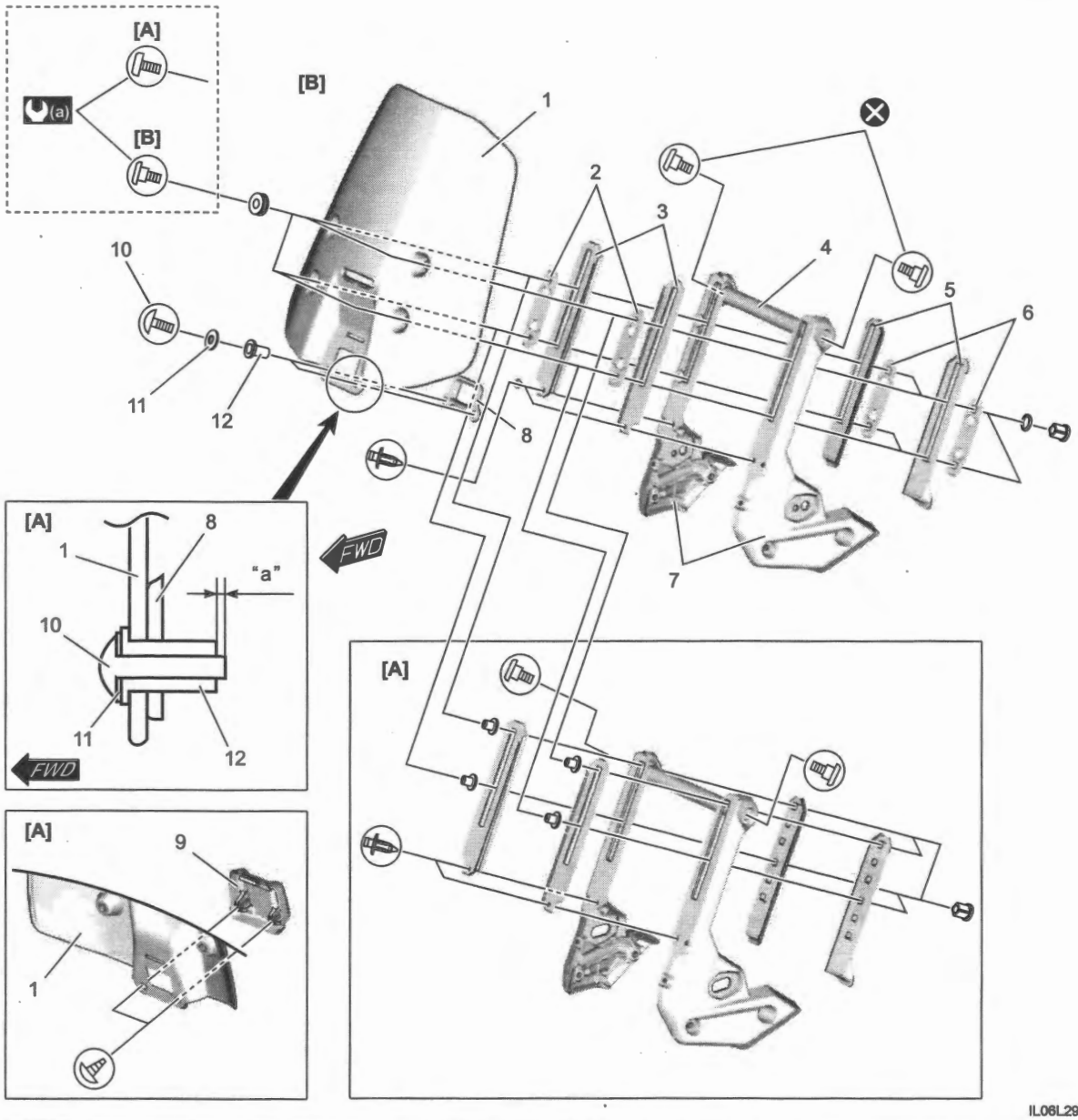

IL06L2940001-02

[A]: For DL1050RQ.	5. Windscreen rear slider	11. Washer
[B]: For DL1050RC.	6. Windscreen rear bracket	12. Nut
1. Windscreen	7. Windscreen brace	"a": 5.0 – 6.0 mm (0.197 – 0.236 in)
2. Windscreen front bracket	8. Screen upper lock stopper No.1	(a) : 10 N·m (1.0 kgf-m, 7.5 lbf-ft)
3. Windscreen front slider	9. Windscreen lock cover	: Do not reuse.
4. Windscreen brace rod	10. Screw	

Knuckle Cover Construction (If Equipped)

BENL06L29406003

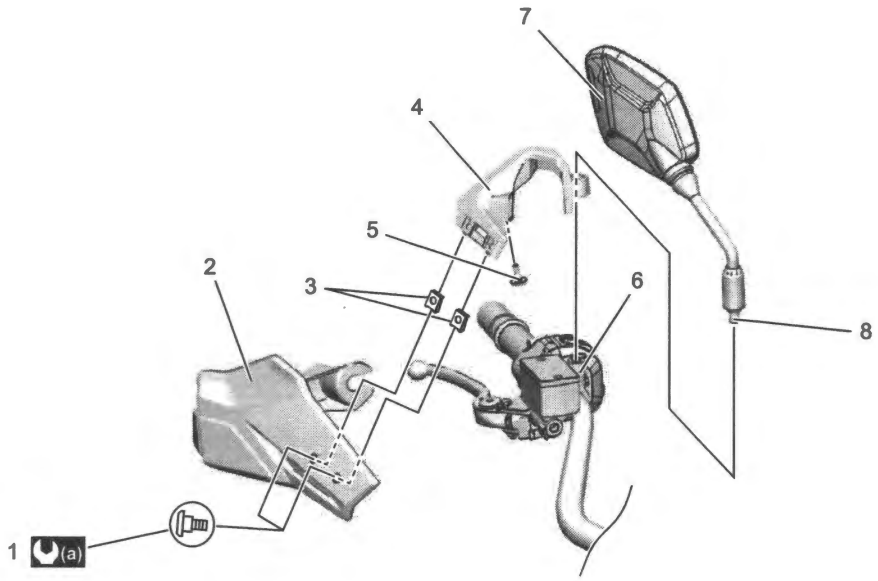

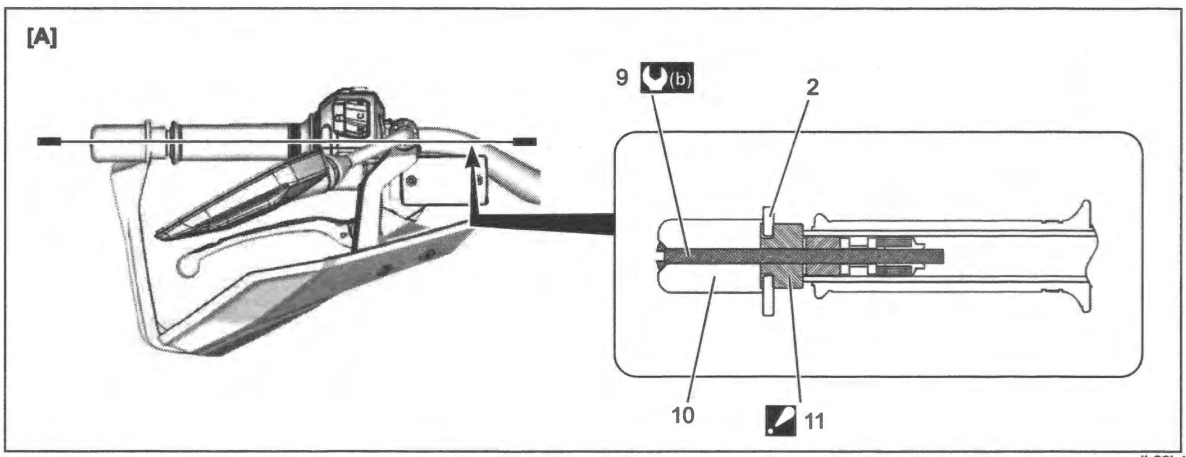

IL06L1940092-02

[A]: After assembling	5. Knuckle cover cushion	10. Handle balancer
1. Knuckle cover screw	6. Front brake master cylinder	11. Handle balancer spacer : After the handle balancer spacer has contacted the handlebar, tighten the handle balancer screw.
2. Knuckle cover	7. Rear view mirror	(a) : 4.5 N·m (0.46 kgf-m, 3.35 lbf-ft)
3. Knuckle cover nut	8. Adapter	(b) : 8.4 N·m (0.86 kgf-m, 6.20 lbf-ft)
4. Knuckle cover bracket	9. Handle balancer screw	

Cowling Construction

BENL06L29406004

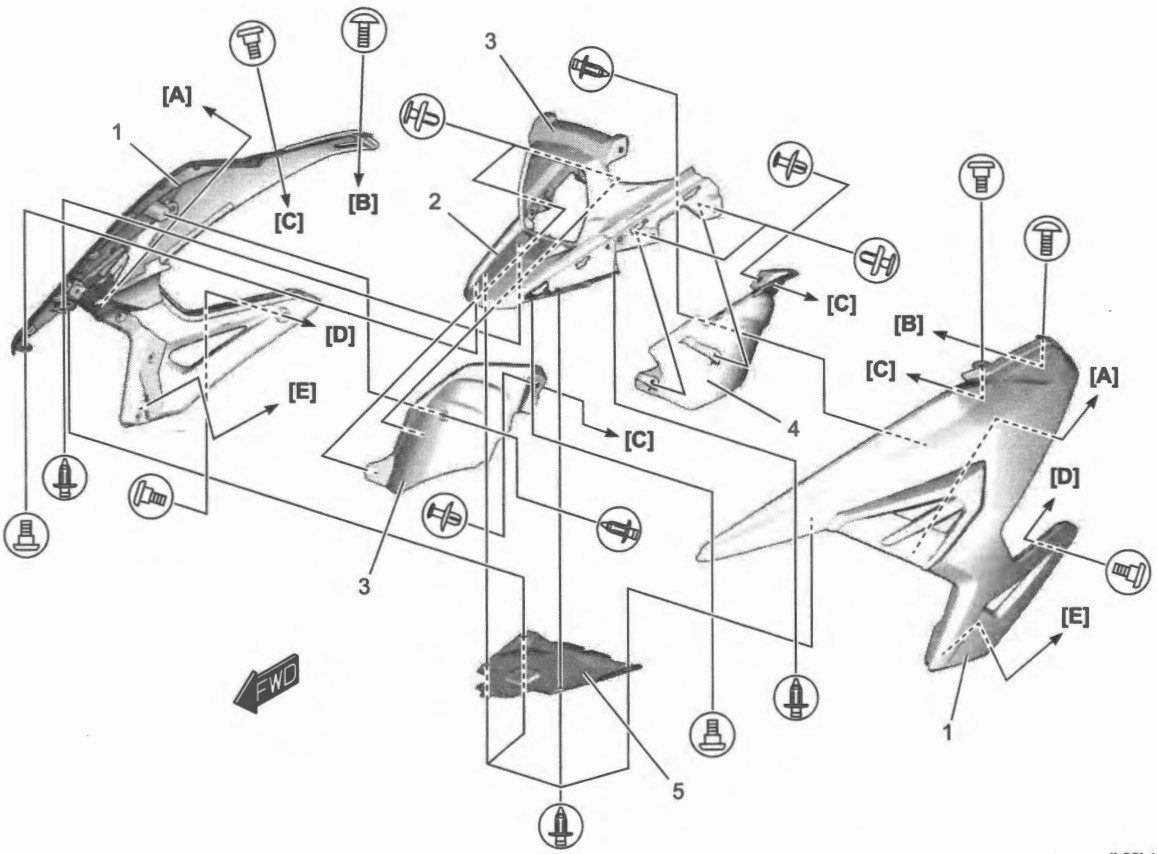

IL06L1940007-01

[A]: To fuel tank cover bracket	[E]: To radiator	4. Side Inner Upper Cover
[B]: To fuel tank bracket	1. Side Cover Assembly	5. Body Center Lower Cowling
[C]: To tank cover bracket	2. Body Center Cowling	
[D]: To fuel tank	3. Body Cowling	

Front Fender Construction

BENL06L29406005

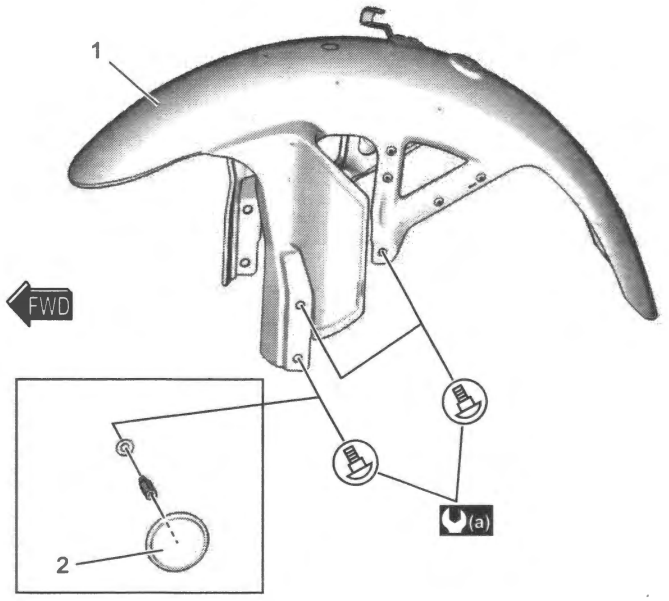

IL06L1940008-01

1. Front fender	(a) : 12 N·m (1.2 kgf-m, 9.0 lbf-ft)
2. Front side reflex reflector (if equipped)	

Side Cover Construction

BENL06L29406006

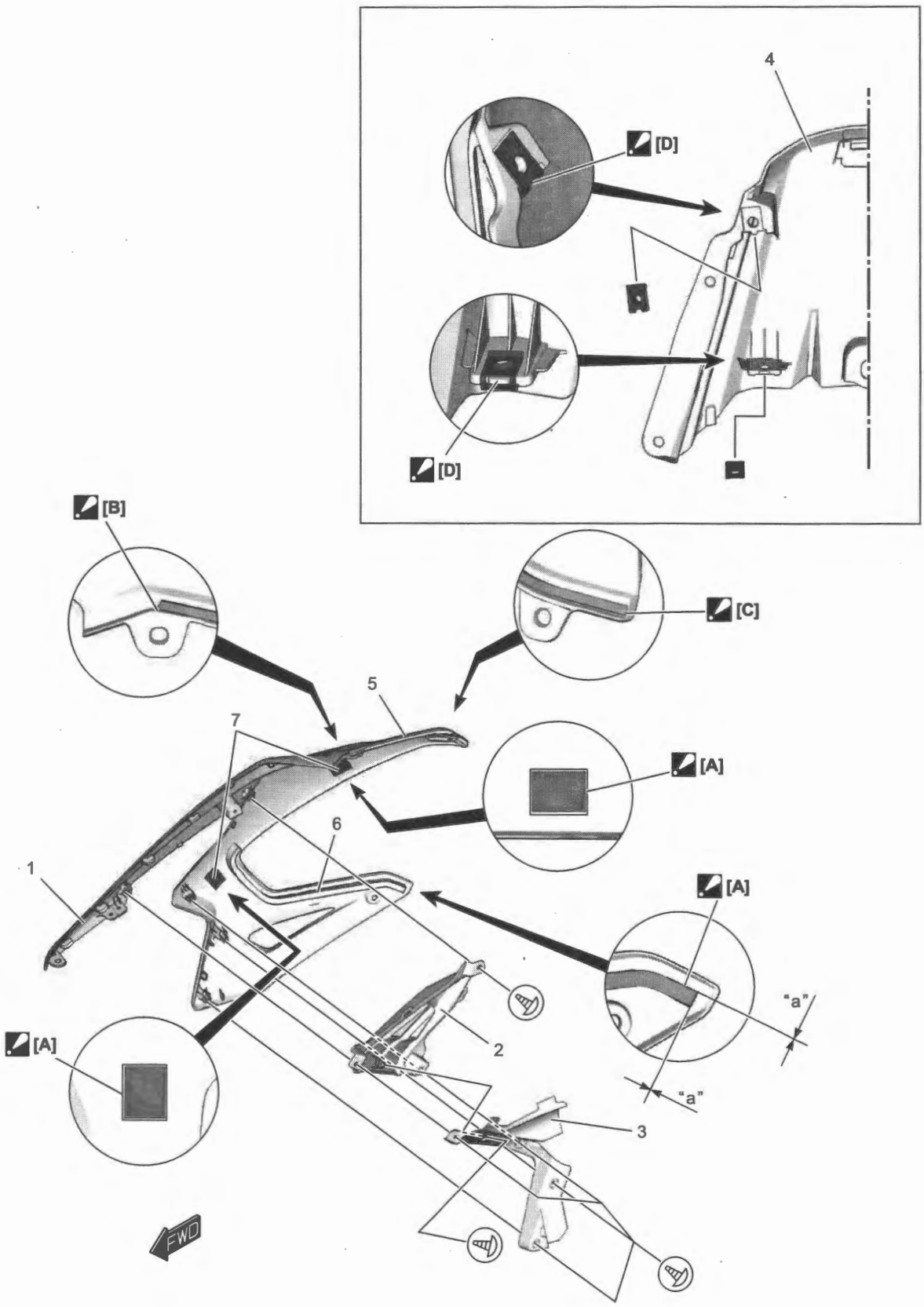

IL06L1940009-04

[A]: Stick the fastener aligning with emboss line.	1. Side Cover	5. Side cover cushion No.1
[B]: Stick the cushion aligning with the end of curved surface. Clean the adhesive surface before sticking the cushion.	2. Side cover No.2	6. Side cover cushion No.2
[C]: Match the cushion with the edge of side cover and stick the cushion aligning with the end of curved surface. Clean the adhesive surface before sticking the cushion.	3. Side inner lower cover	7. Side cover fastener
[D]: Assemble the nut with matching hole of nut to projection of body center cowling.	4. Side inner upper cover	"a": 0 – 2 mm (0 – 0.079 in)

Fuel Tank Cover Construction

BENL06L29406007

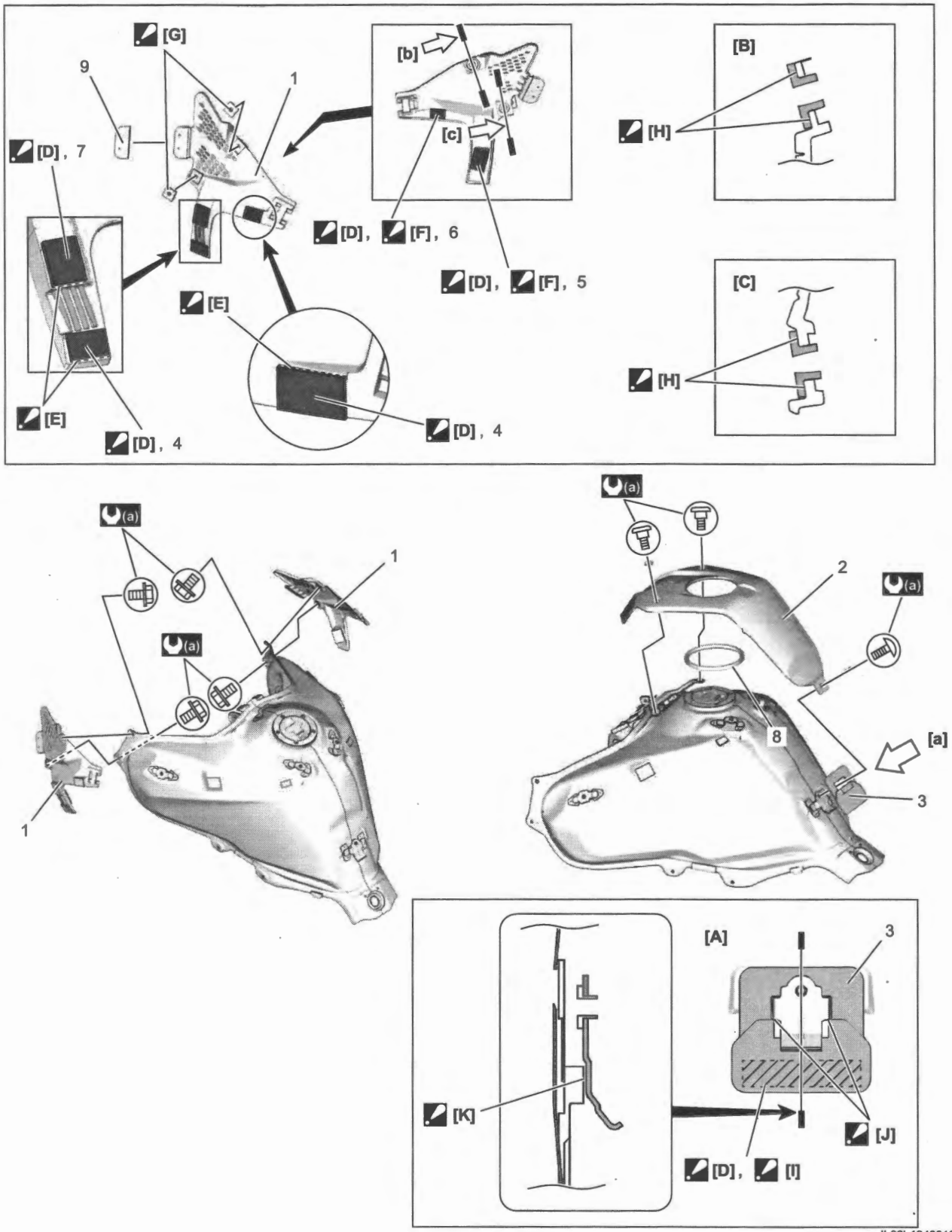

IL06L1940010-02

[A]: View [a]	[H]: Press fit the nut to end.	4. Tank cover bracket cushion No.1
[B]: View [b]	[I]: Stick the cushion to the fuel tank after assembling.	5. Tank cover bracket cushion No.2
[C]: View [c]	[J]: Assemble the cushion after matching fuel tank bracket.	6. Tank cover bracket cushion No.3
[D]: Clean the adhesive surface before sticking the cushion and fastener. Press the cushion and fastener after sticking.	[K]: Match concave shape of cushion with convexity of the fuel tank center bracket.	7. Fuel tank fastener
[E]: Stick the cushion and fastener on the basis of section of broken line.	1. Fuel tank side cover bracket	8. Fuel tank cover rubber
[F]: Stick the cushion aligning with the raised face.	2. Fuel tank center cover	9. Fuel tank cover bracket cushion
[G]: Press fit the nut to fuel tank side cover bracket.	3. Fuel tank rear cushion	(a) : 5.5 N·m (0.56 kgf-m, 4.05 lbf-ft)

Frame Cover Construction

BENL06L29406008

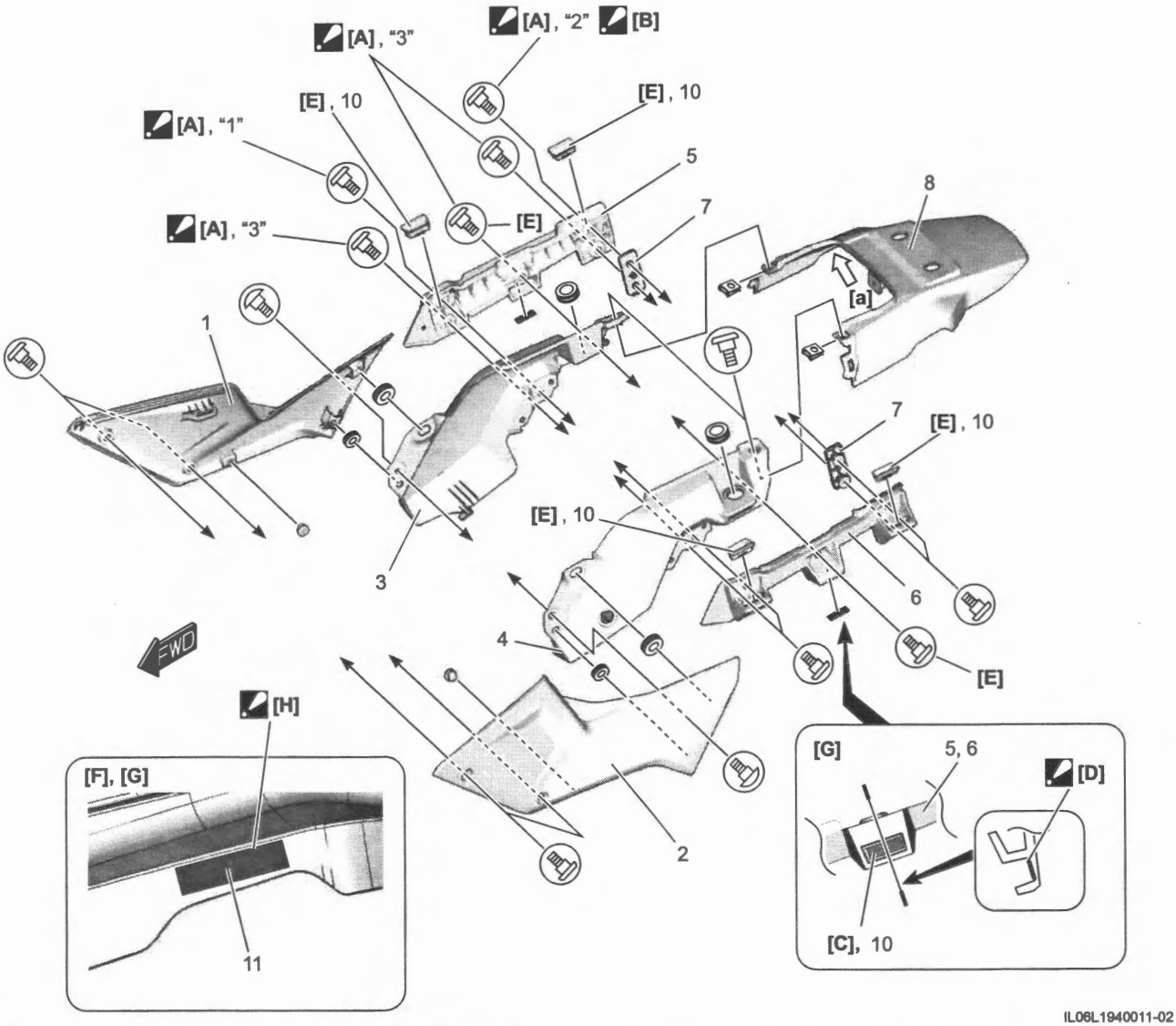

IL06L1940011-02

[A]: Tighten the bolts in order of "1" → "2" → "3". The same procedure is applicable to both the right and left parts.	[H]: Stick the tape aligning with emboss line.	7. Frame center cover
[B]: Set the steps of the bolt to the hole position without pinching covers.	1. Frame front cover (RH)	8. Side case bracket cushion : Clean the adhesive surface before sticking the cushion. Press the cushion after sticking.
[C]: For option.	2. Frame front cover (LH)	9. Side case bracket bush
[D]: Stick the cushion aligning with the end of curved surface of the side case upper bracket.	3. Frame cover (RH)	10. Cushion
[E]: For DL1050RC.	4. Frame cover (LH)	11. Tape
[F]: View [a]	5. Side case upper bracket (RH)	
[G]: The same procedure is applicable to both the right and left parts.	6. Frame cover spacer	

Rear Fender Construction

BENL06L29406009

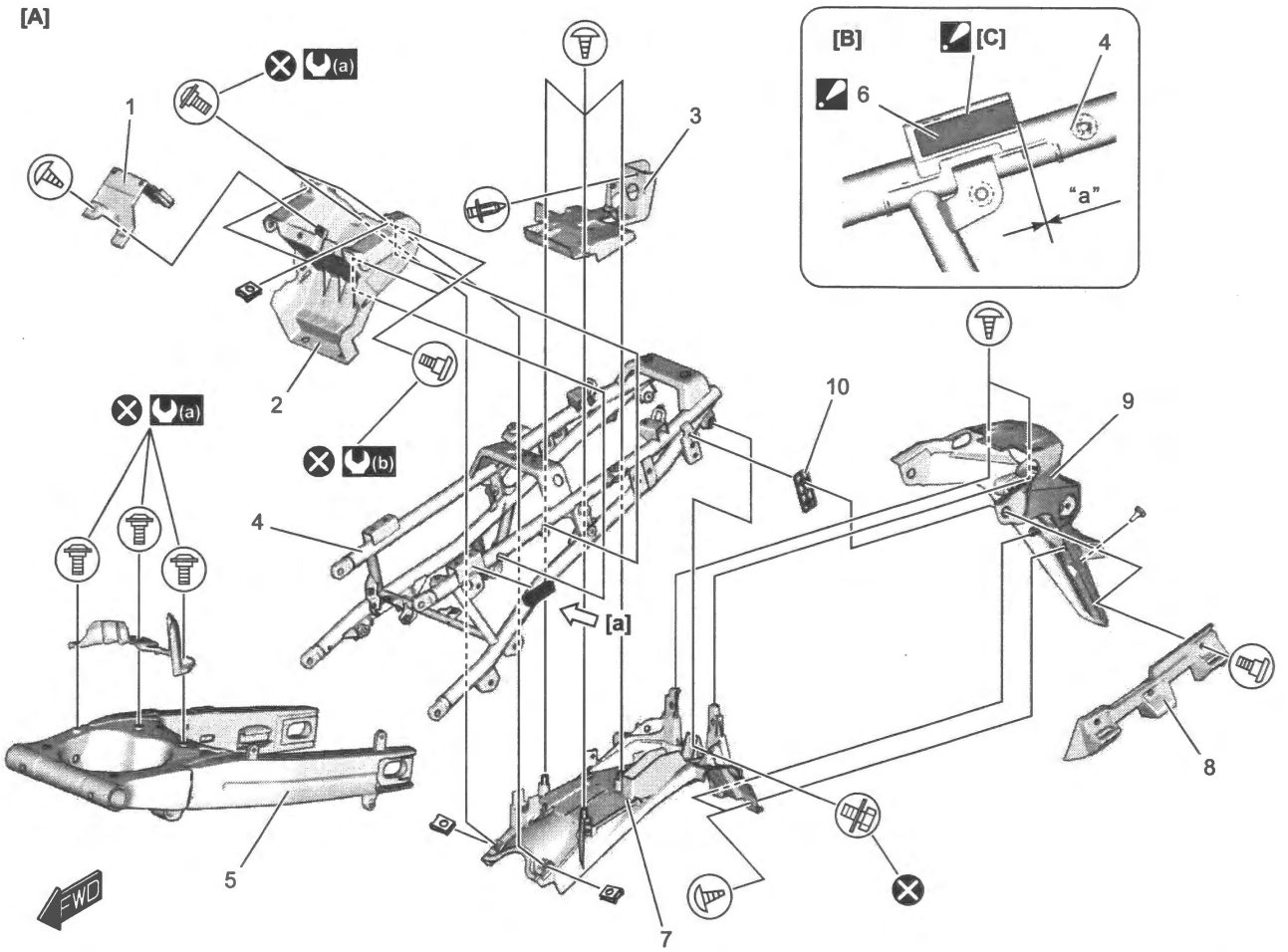

IL06L1940012-04

[A]: LH parts are shown. The same procedures are applicable to RH parts.	4. Seat rail	10. Frame Cover Spacer
[B]: View [a]	5. Swingarm	(a) : 4.5 N·m (0.46 kgf-m, 3.35 lbf-ft)
[C]: Stick the cushion aligning with the end of curved surface of the bracket.	6. Frame cover side cushion No.5 : Clean the adhesive surface before sticking the cushion. Press the cushion after sticking.	(b) : 10 N·m (1.0 kgf-m, 7.5 lbf-ft)
1. Battery holder lid	7. Rear Fender Front	"a": 0 – 2 mm (0 – 0.079 in)
2. Battery holder	8. Side Case Upper Bracket	: Do not reuse.
3. Electric holder	9. Rear Fender Rear	

Windscreen Cushion Construction

BENL06L29406010

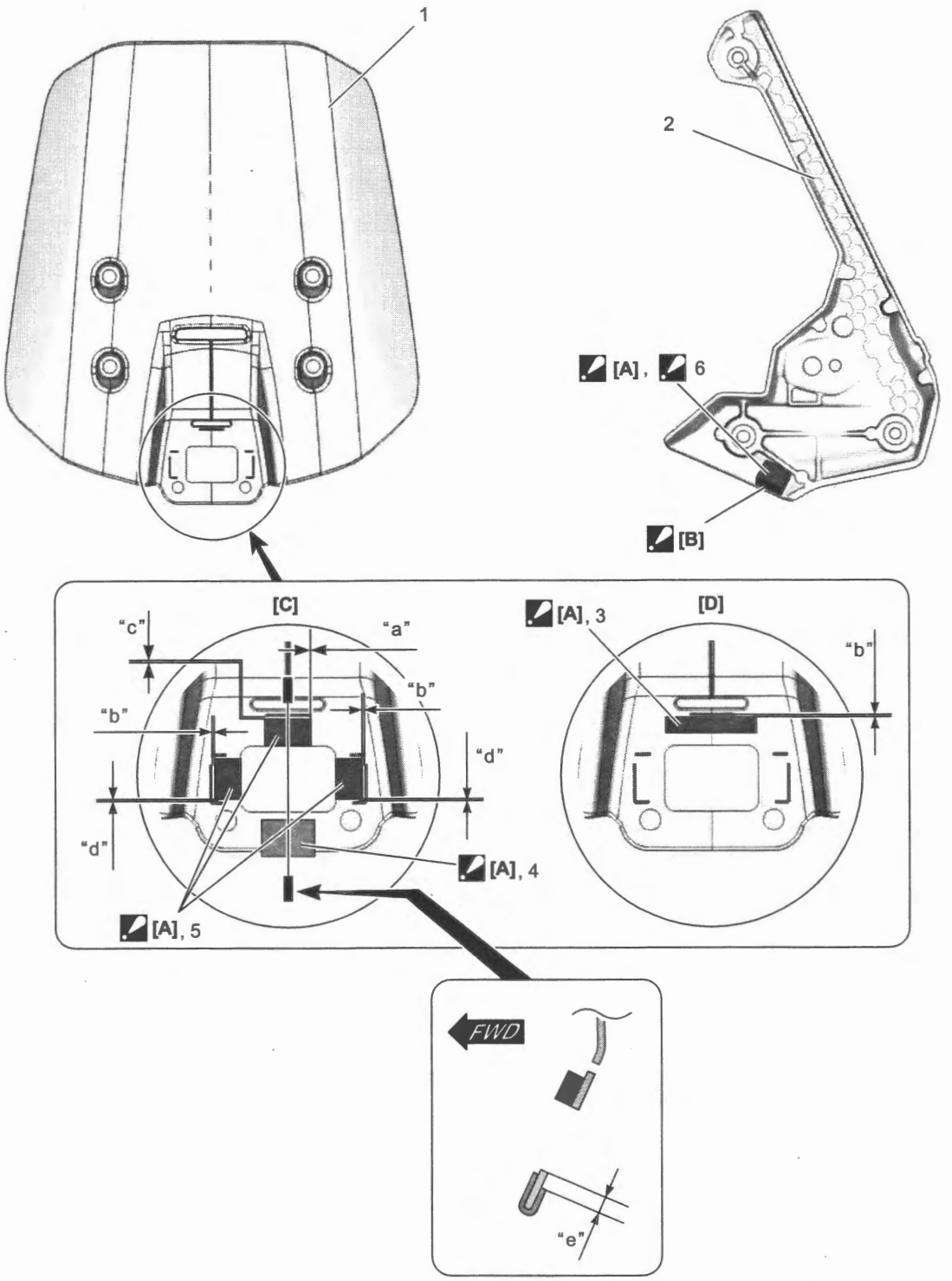

IL06L1940013-02

[A]: Clean the adhesive surface before sticking the cushion. Press the cushion after sticking.	2. Windscreen brace	"a": -2 – 2 mm (-0.079 – 0.079 in)
[B]: Stick the cushion aligning with the end of curved surface.	3. Windscreen cushion No.1	"b": 0 – 2 mm (0 – 0.079 in)
[C]: For DL1000RC	4. Windscreen cushion No.2	"c": 0 – 1.5 mm (0 – 0.059 in)
[D]: For DL1000RQ	5. Windscreen cushion No.3	"d": 0 – 1 mm (0 – 0.039 in)
1. Windscreen	6. Windscreen brace cushion : Sticking position is symmetric.	"e": 4 – 8 mm (0.16 – 0.31 in)

Body Center Lower Cowling Cushion

BENL06L29406011

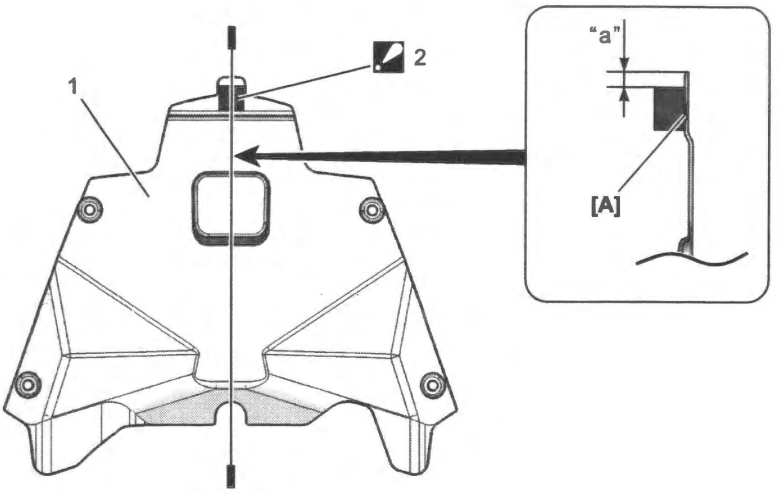

IL06L1940093-01

[A]: No grain face	2. Cushion : Clean the adhesive surface before sticking the cushion. Press the cushion after sticking.
1. Body center lower cowling	"a": 6 – 8 mm (0.24 – 0.31 in)

Meter Panel Cushion Construction

BENL06L29406012

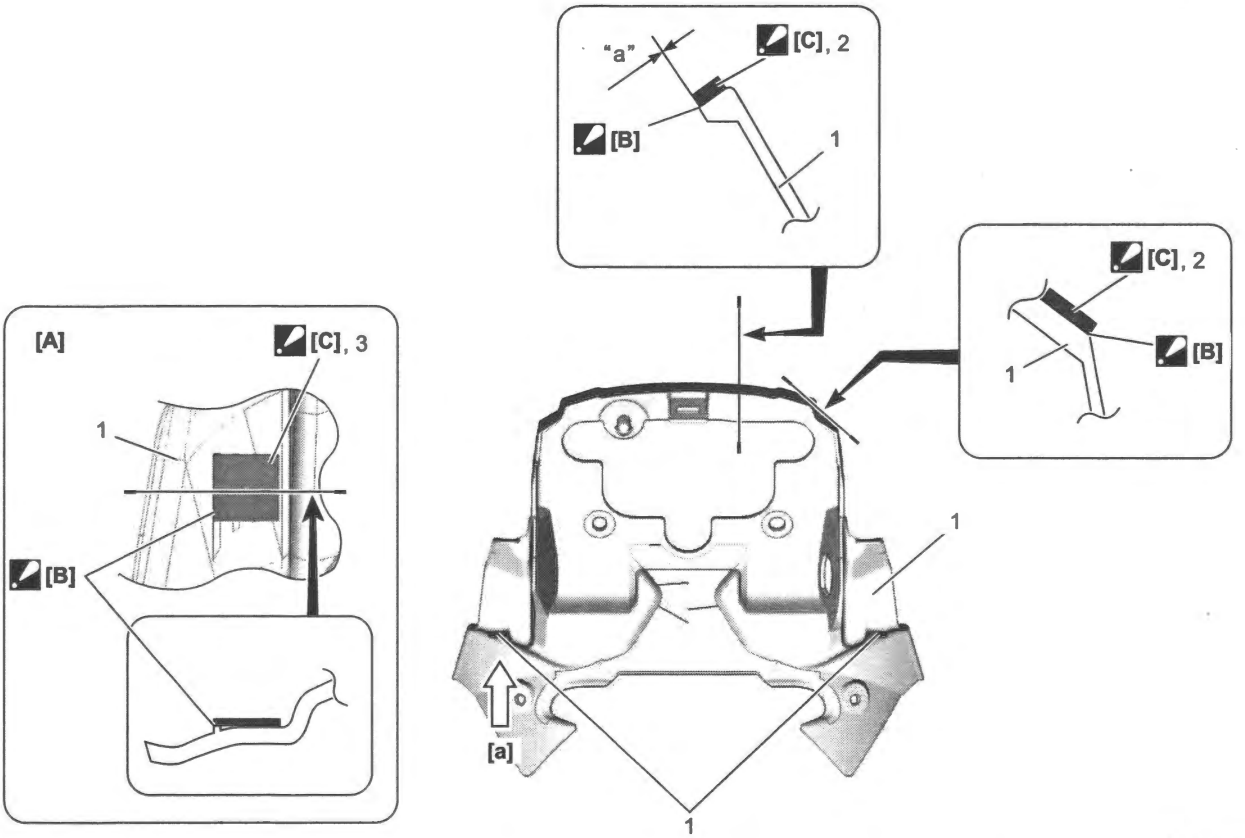

IL06L1940014-01

[A]: View [a]	1. Meter panel rear	"a": 0 – 1 mm (0 – 0.039 in)
[B]: Align the edge of cushion and meter rear panel.	2. Meter rear panel upper cushion	
[C]: Clean the adhesive surface before sticking the cushion.	3. Meter rear panel side cushion	

Fuel Tank Cover Cushion Construction

BENL06L29406013

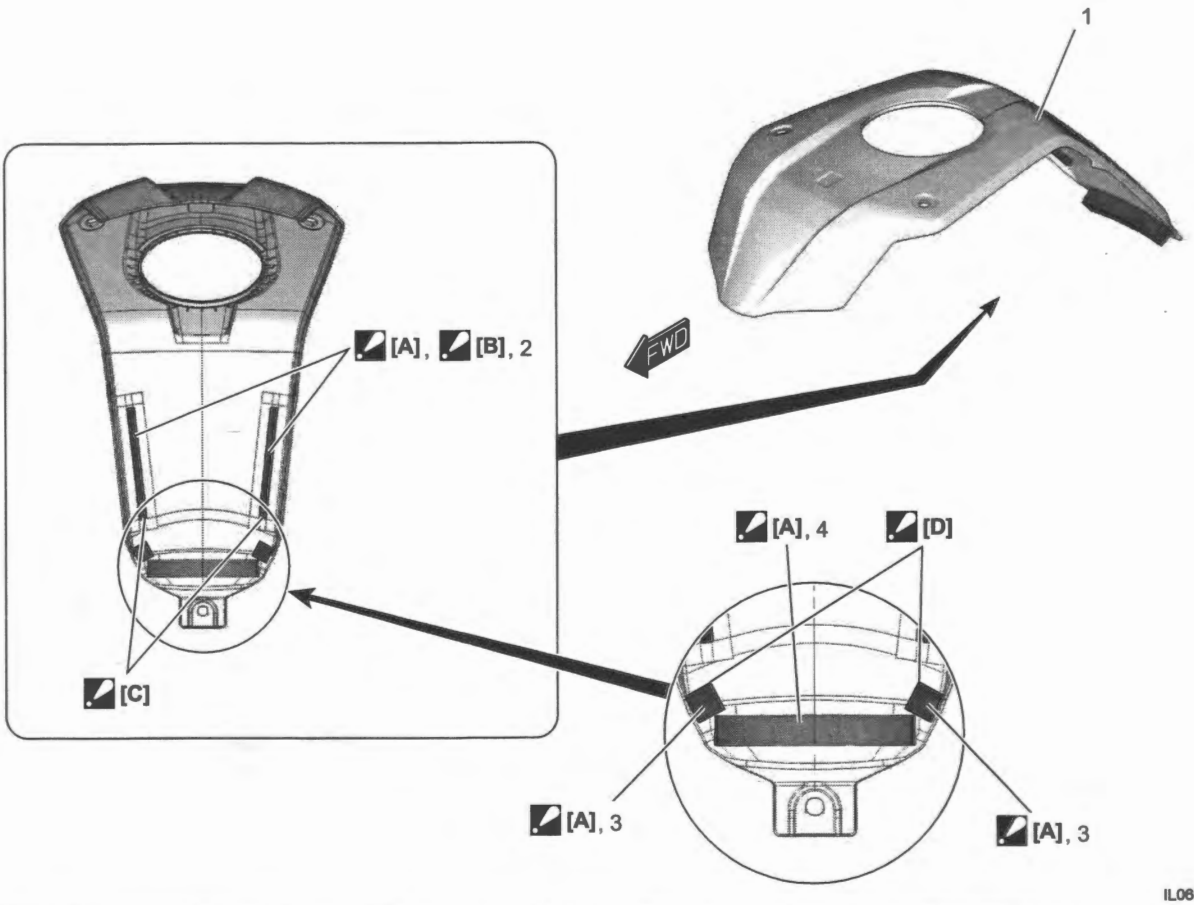

IL06L1940015-02

[A]: Clean the adhesive surface before sticking the cushion. Press the cushion after sticking.	[D]: Stick the cushion aligning with emboss line.	3. Fuel tank cover cushion No.2
[B]: Stick the cushion aligning with the raised face.	1. Fuel tank center cover	4. Fuel tank rear cushion
[C]: Stick the cushion based on rear side.	2. Fuel tank cover cushion	

Frame Cover Cushion Construction

BENL06L29406014

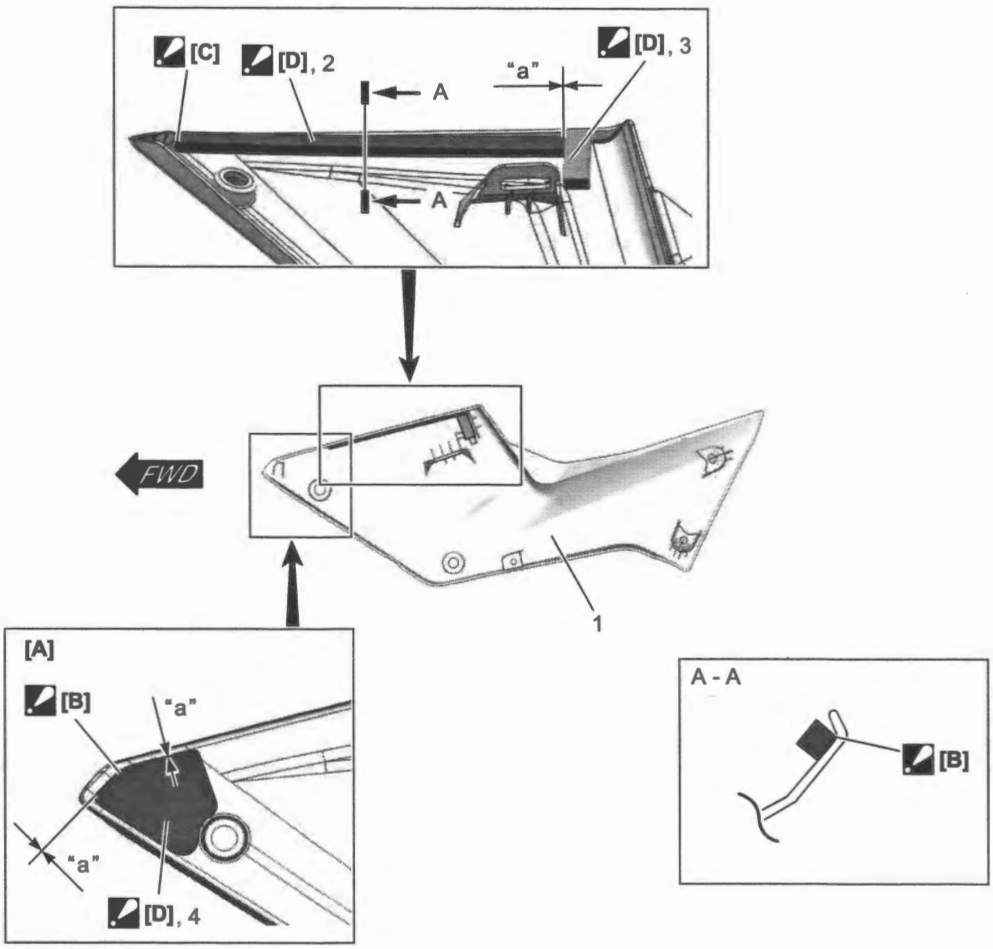

IL06L1940016-02

[A]: For DL1050RC.	[D]: Clean the adhesive surface before sticking the cushion. Press the cushion after sticking.	3. Frame front cover rear cushion
[B]: Stick the cushion or tape aligning with the end of curved surface.	1. Frame front cover	4. Frame cover protector
[C]: Match the cushion to rib.	2. Frame cover cushion	"a": 0 – 1 mm (0 – 0.039 in)

Electric Parts Holder Cushion Construction

BENL06L29406015

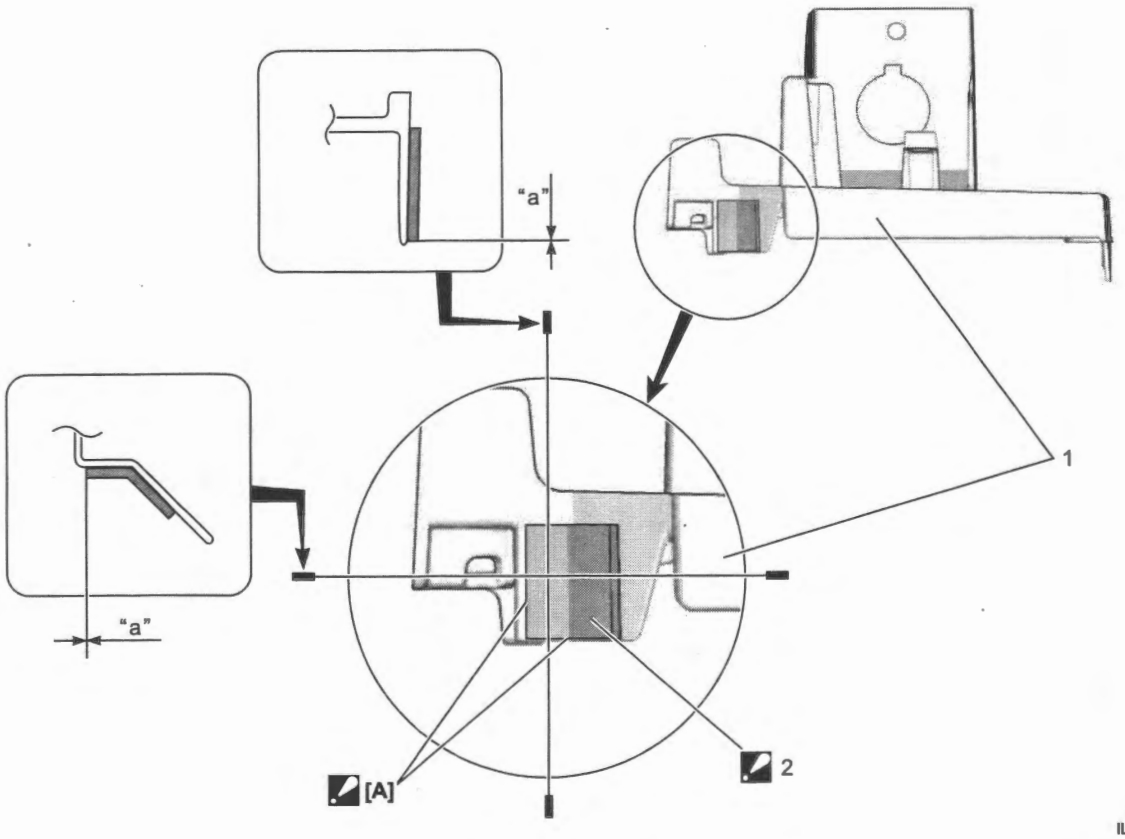

IL06L1940094-01

[A]: Stick the cushion aligning with the end of curved surface.	2. Cushion : Clean the adhesive surface before sticking the cushion.
1. Electric parts holder	"a": 0 – 2 mm (0 – 0.079 in)

Rear Fender Cushion Construction

BENL06L29406016

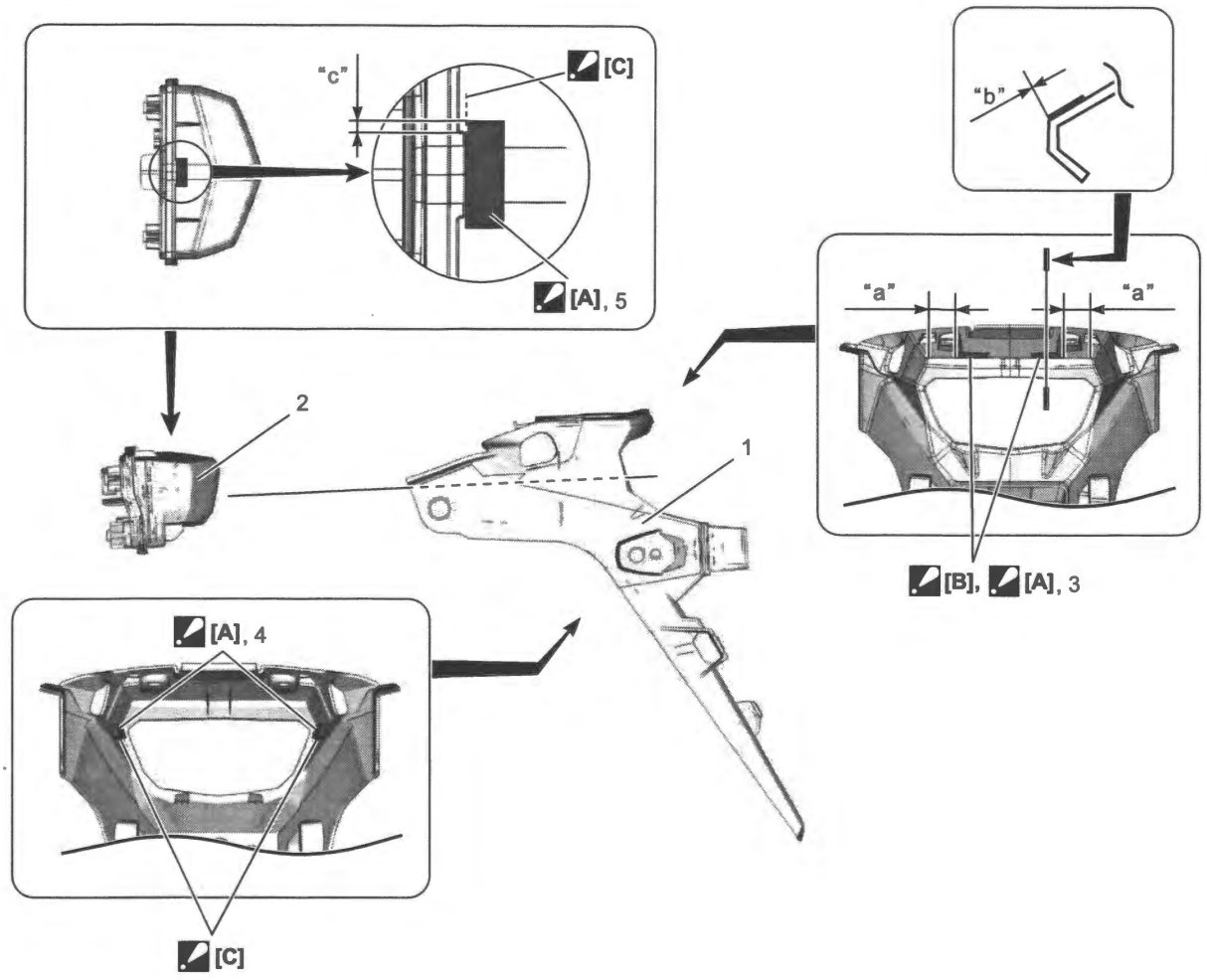

IL06L1940017-02

[A]: Clean the adhesive surface before sticking the cushion. Press the cushion after sticking.	2. Rear combination light	"a": 15 – 25 mm (0.059 – 0.98 in)
[B]: Stick the cushion or tape aligning with the end of curved surface	3. Tape	"b": 0 – 2 mm (0 – 0.079 in)
[C]: Stick the cushion aligning with the edge of lens.	4. Rear combination light cushion	"c": 0 – 6 mm (0 – 0.23 in)
1. Rear fender rear	5. Cushion	

Sport Carrier Construction

BENL06L29406017

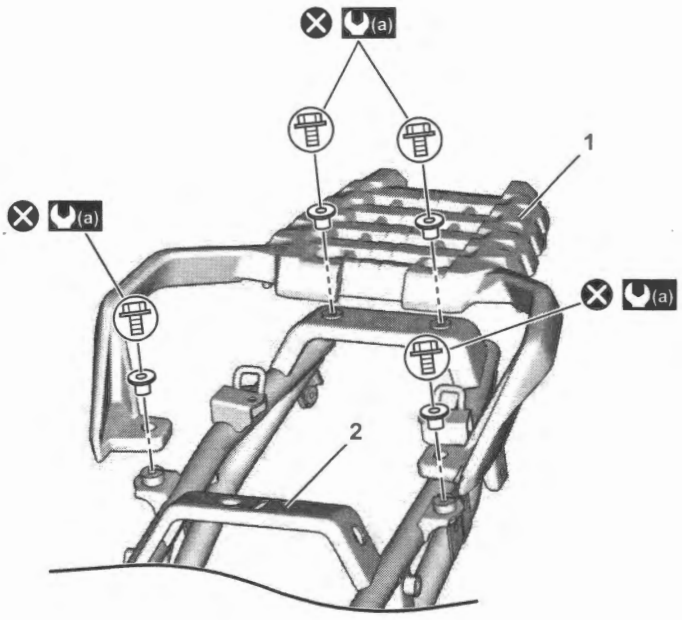

IL06L1940018-01

1. sport carrier	(a) : 23 N·m (2.3 kgf-m, 17.0 lbf-ft)
2. Seat rail	: Do not reuse.

Battery Box Cushion Construction

BENL06L29406018

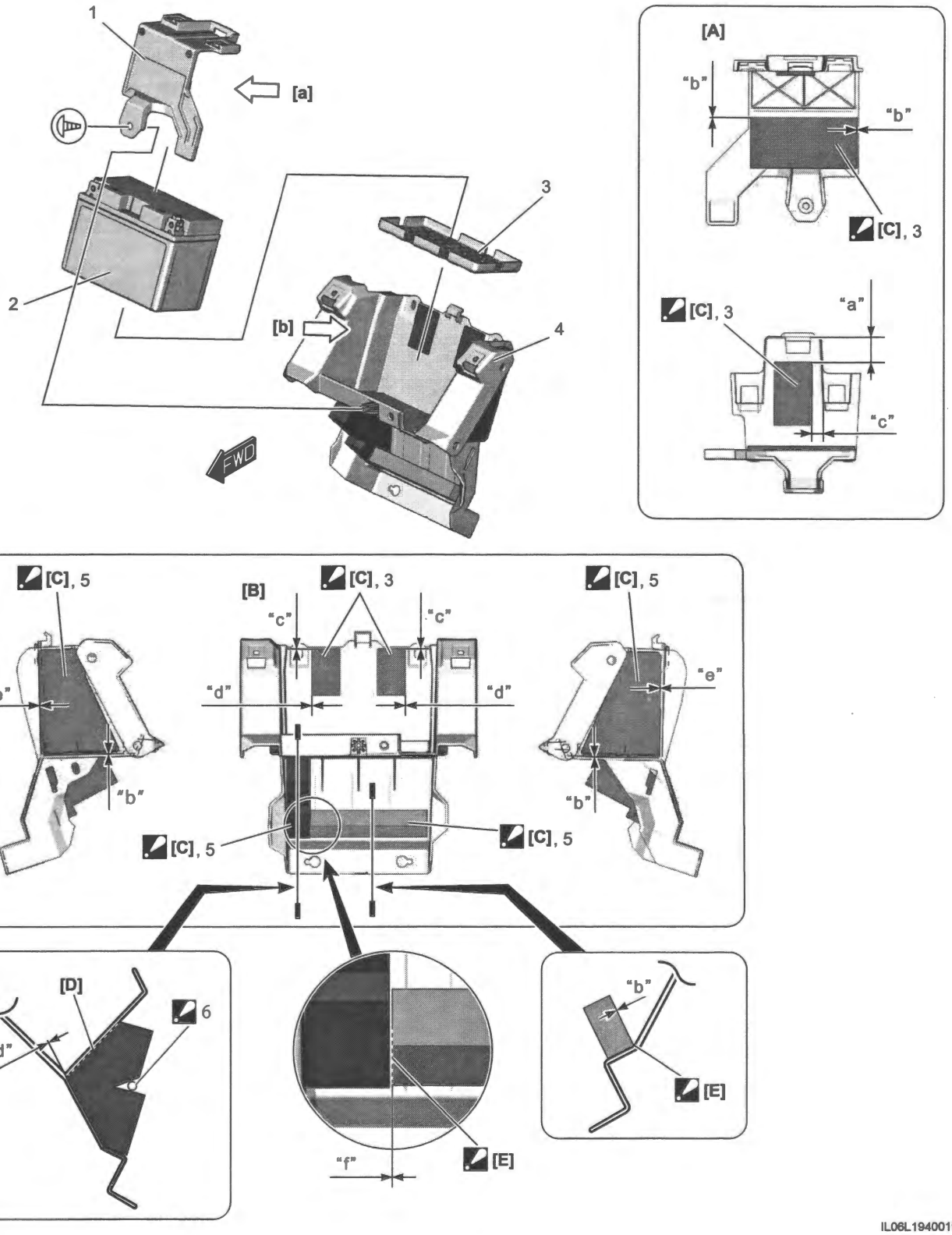

IL06L1940019-04

[A]: View [a]	1. Battery holder lid	"a": 20 mm (0.79 in)
[B]: View [b]	2. Battery	"b": 0 – 3 mm (0 – 0.11 in)
[C]: Clean the adhesive surface before sticking the cushion and protector. Press the cushion and protector after sticking.	3. Battery protector	"c": 4 – 6 mm (0.16 – 1.23 in)
[D]: Adhesive surface	4. Battery holder	"d": 0 – 5 mm (0 – 0.19 in)
[E]: Match corner of the cushion to end of the battery holder. Stick the cushion along the end of the curved surface on the battery holder.	5. Battery cushion	"e": -3 – 0 mm (0.12 – 0 in)
[F]: Set the left side of cushion aligning with the emboss line.	6. Main harness : Main harness passes through the slit of cushion.	"f": -1 – 1 mm (-0.093 – 0.039 in)

Electric parts holder and Rear Fender (Front) Cushion Construction

BENL06L29406019

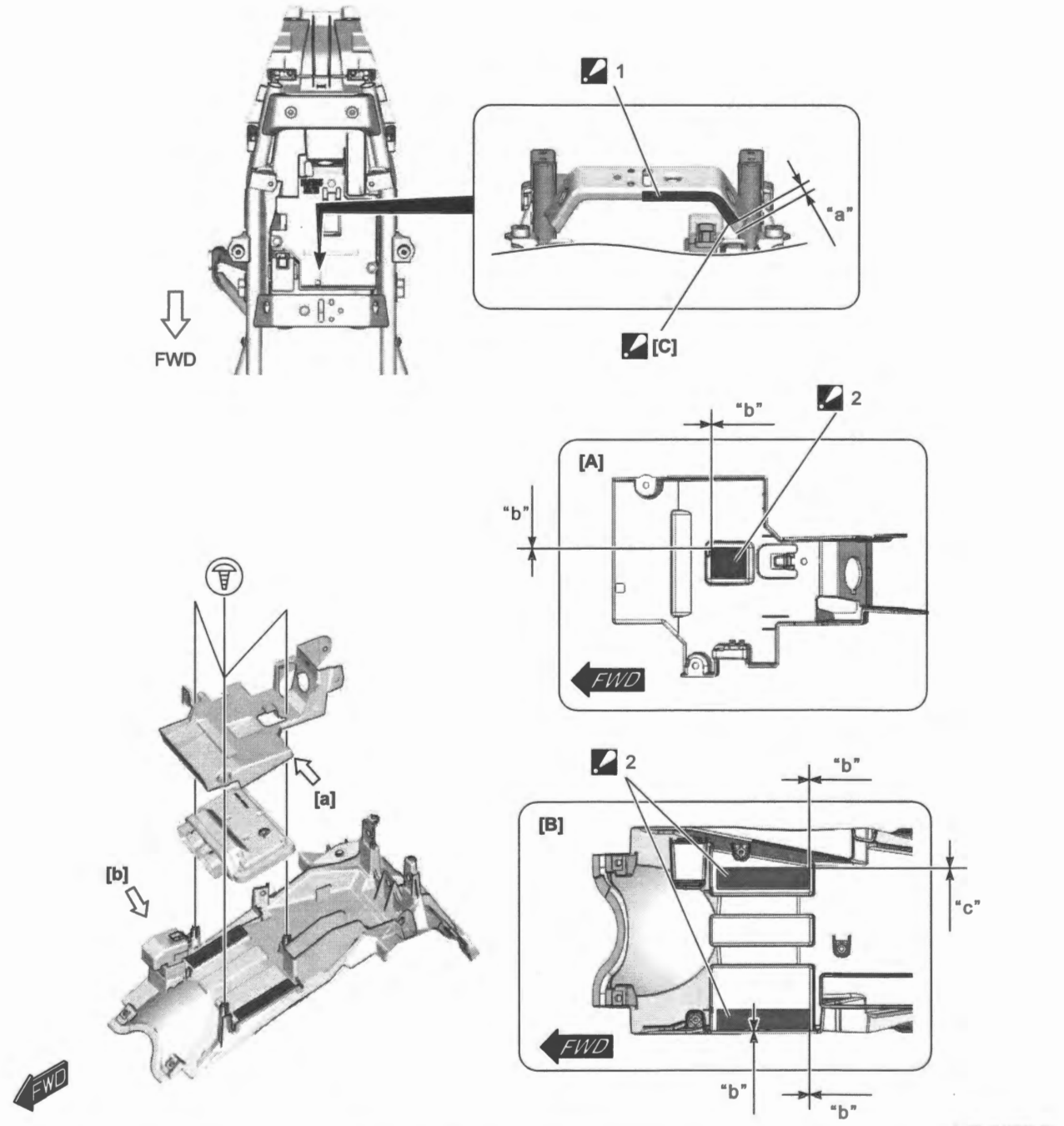

IL06L1940097-02

[A]: View [a]	1. Cushion : Clean the adhesive surface before sticking the protector.	"b": 0 – 3 mm (0 – 0.11 in)
[B]: View [b]	2. Protector : Clean the adhesive surface before sticking the protector.	"c": -3 – 0 mm (0.12 – 0 in)
[C]: Insert the protector firmly after matching protector end with welding point.	"a": 0 – 20 mm (0 – 0.79 in)	

Pivot Cover Cushion Construction

BENL06L29406020

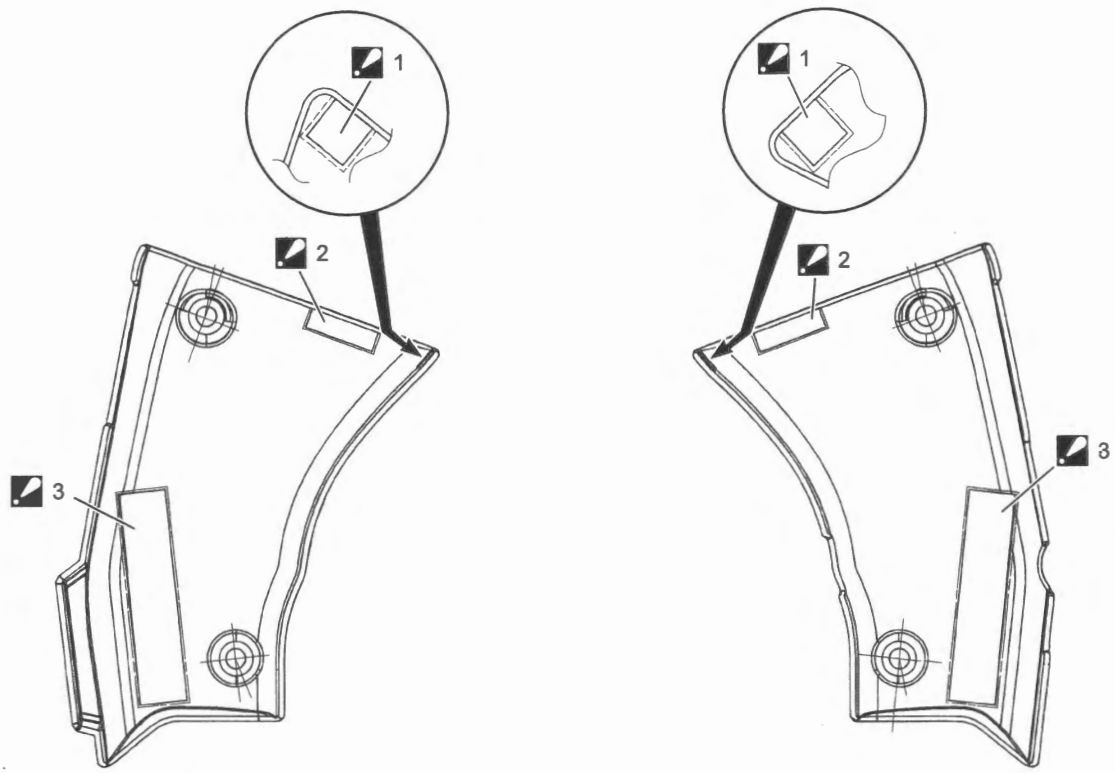

IE31J1940050-03

1. Pivot cover cushion No. 1 : Stick the cushion aligning with the end of curved surface and emboss line.	2. Pivot cover cushion No. 2 : Stick the cushion aligning with the end of curved surface and emboss line.	3. Pivot cover cushion No. 3 : Stick the cushion aligning with the emboss line.

Clip Removal and Installation

BENL06L29406021

Type 1

Removal

1) Depress the head of clip center piece (1).
2) Pull out the clip (2).

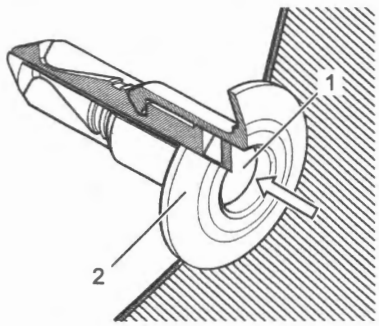

ID26J1940192-01

Installation

1) Let the center piece stick out toward the head so that the claws (1) closes.
2) Insert the clip into the installation hole.

NOTE

To prevent the pawl (1) from damage, insert the clip all the way into the installation hole.

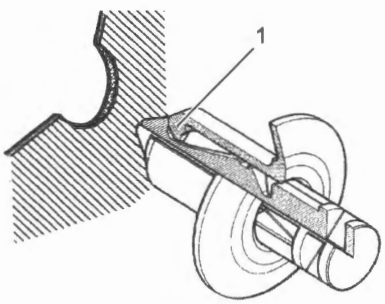

ID26J1940160-01

3) Push in the head of center piece until it becomes flush with the clip outside face.

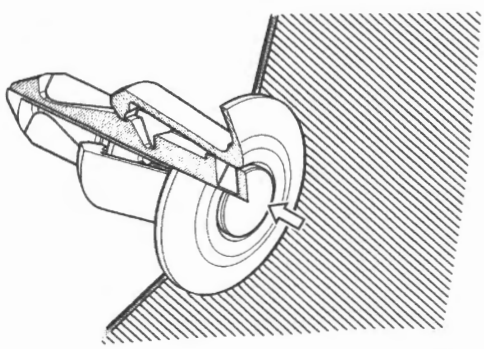

I649G1940007-02

Type 2

Removal

1) Pull up the center piece.
2) Remove the clip.

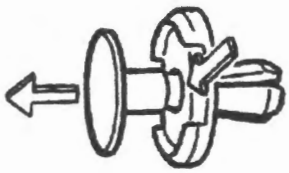

ID26J1940171-02

Installation

1) Keep the pin pulled out to close the claws.
2) Set the clip into the fitting hole.
3) Push in the center piece.

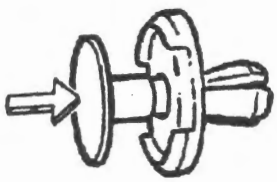

ID26J1940172-02

Seat Removal and Installation

BENL06L29406022

Front Seat

Removal

1) Remove the rear seat. Refer to "Rear Seat" under "Seat Removal and Installation" (Page 9D-27).
2) Remove the front seat (1).

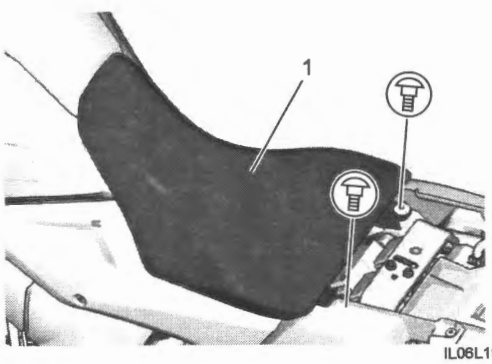

IL06L1940020-02

Installation

1) Slide the front seat into bracket.

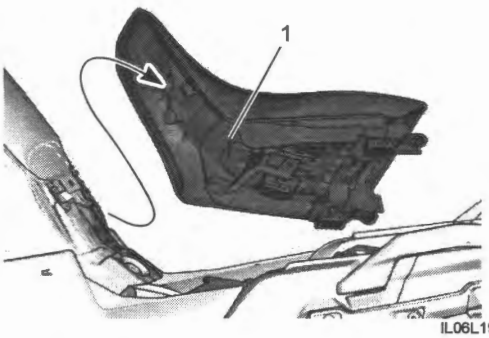

IL06L1940090-01

2) Tighten the front seat bolts (1) to the specified torque.

Tightening torque
Front seat bolt (a): 5.5 N·m (0.56 kgf-m, 4.05 lbf-ft)

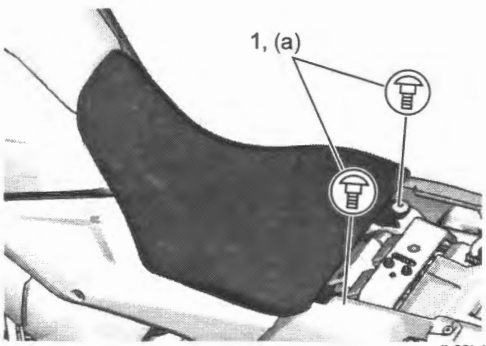

IL06L1940022-01

Rear Seat
Removal

1) Unlock the seat lock (1) with the ignition key.
2) Remove the rear seat (2).

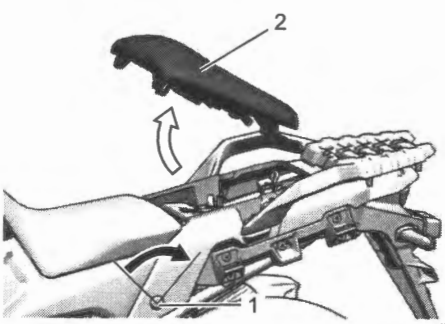

IL06L1940091-01

Installation

Slide the rear seat hook into the seat hook guide and push down firmly until the seat snaps into the locked position.

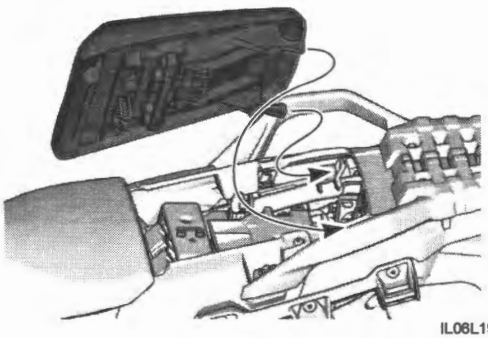

IL06L1940024-02

Seat Lock Cable / Seat Lock Assembly / Striker Support Bracket Removal and Installation

BENL06L29406023

Seat Lock Cable / Seat Lock Assembly
Removal

1) Remove the frame cover (LH). ☞(Page 9D-30)
2) Disconnect the seat lock cable (1).

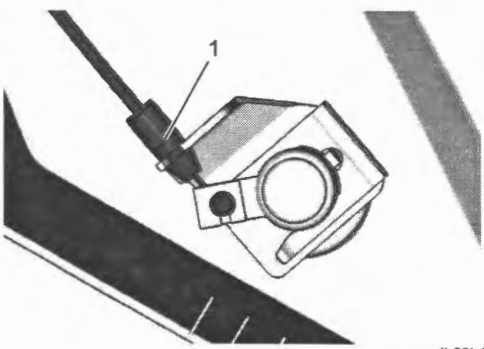

IL06L1940025-01

3) Remove the seat lock cable plate (1), seat lock cable guide (2) and seat lock assembly (3).

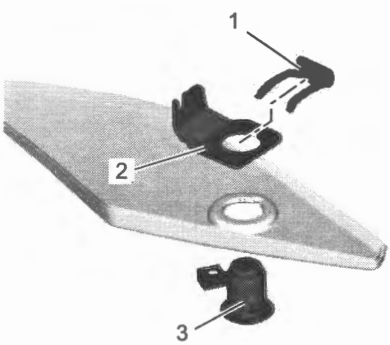

IL06L1940026-01

Installation
Install the seat lock cable and seat lock assembly in the reverse order of removal.
Pay attention to the following point:

- Match rib (1) of seat lock assembly with groove of each part.

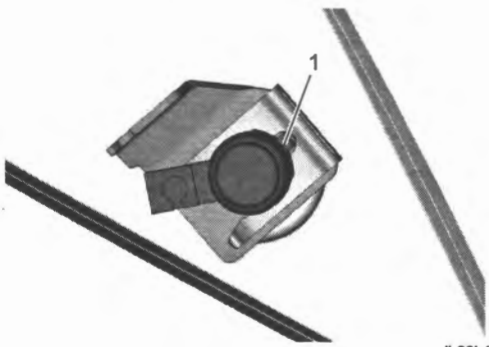

IL06L1940027-01

Striker Support Bracket
Removal

1) Remove the rear seat and front seat. ☞(Page 9D-27)
2) Disconnect the battery minus lead wire (1).
3) Remove the battery holder lid screw and move the battery holder lid (2).

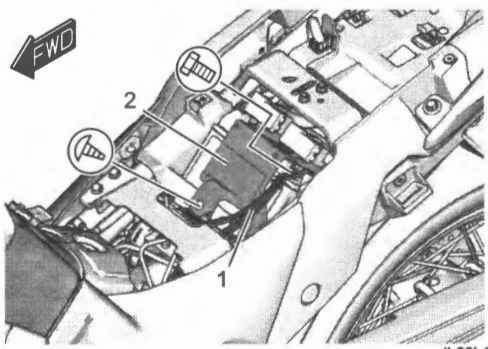

IL06L1940028-01

4) Remove the striker support bracket nuts.

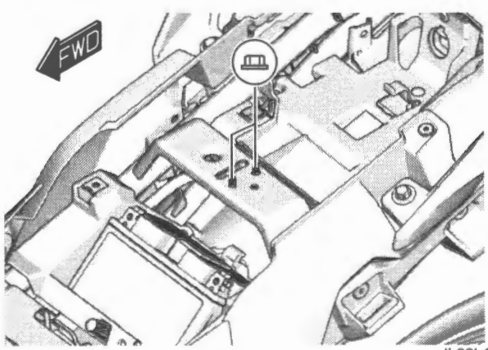

IL06L1940029-01

5) Disconnect the seat lock cable (1) from the striker support bracket (2).

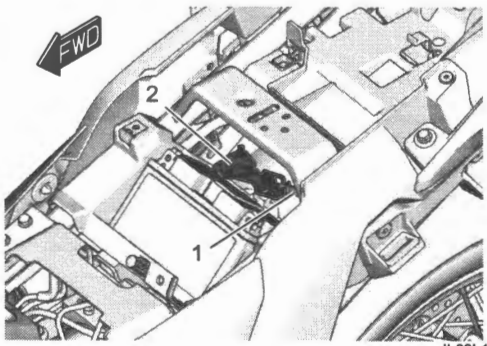

IL06L1940030-01

Installation
Install the striker support bracket in the reverse order of removal.
Pay attention to the following point:

- Tighten the striker support bracket nuts (1) to the specified torque.

Tightening torque
Striker support bracket nut (b): 5.5 N·m (0.56 kgf-m, 4.05 lbf-ft)

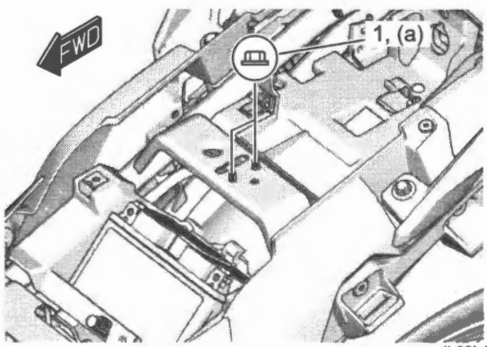

IL06L1940099-02

Sport Carrier Removal and Installation

BENL06L29406024

Refer to "Sport Carrier Construction" (Page 9D-22).

Frame Front Cover / Frame Cover / Rear Frame Cover (or Side Case Upper Bracket) Removal and Installation

BENL06L29406025

Removal

NOTE

The same procedures are applicable to both the right and left parts.

1) Remove the rear seat and front seat. ☞(Page 9D-27)
2) Remove the frame front cover (1).

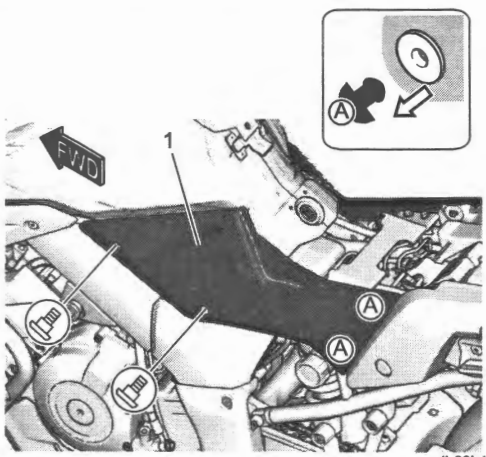

IL06L1940031-02

3) Remove the rear frame cover (1) or side case upper bracket (2).

For DL1050RQ

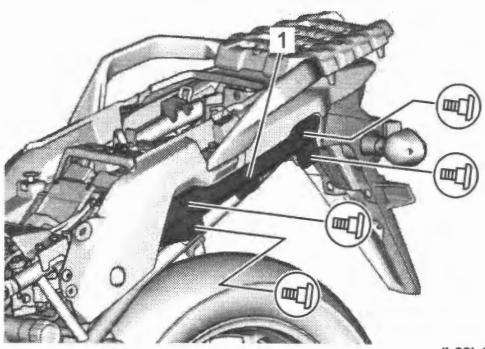

IL06L1940033-01

For DL1050RC

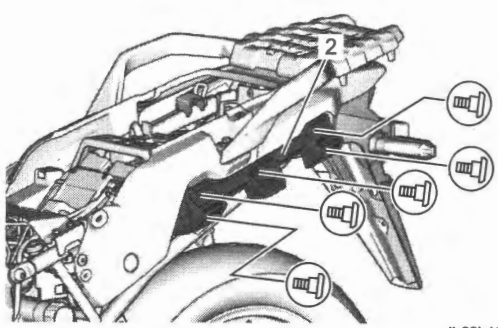

IL06L1940034-01

4) Remove the sport carrier. ☞(Page 9D-29)
5) Remove the frame cover (RH) (1) and (LH) (2).

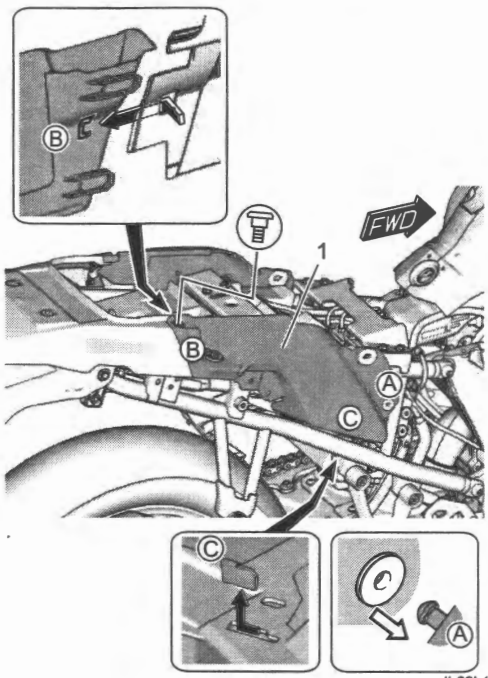

IL06L1940035-02

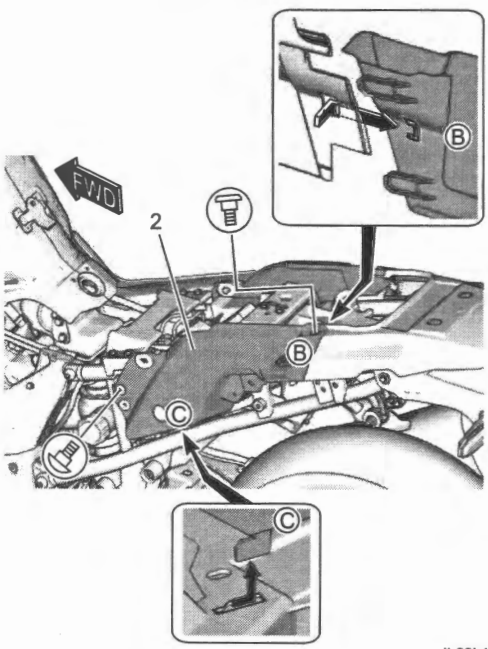

IL06L1940036-02

6) Remove the seat lock assembly from the frame cover (LH). ☞(Page 9D-28)

Installation

Install the removed parts in the reverse order of removal. Pay attention to the following point:

- Tighten the side case bracket bolts in order of "1" → "2" → "3".

For DL1050RQ

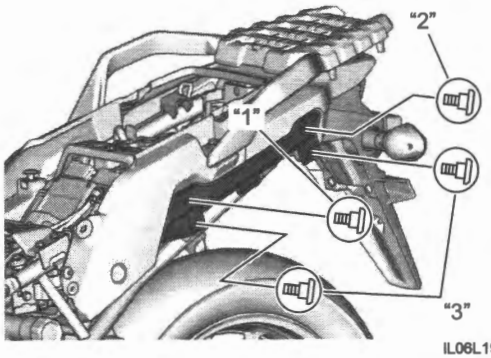

IL06L1940037-01

For DL1050RQ

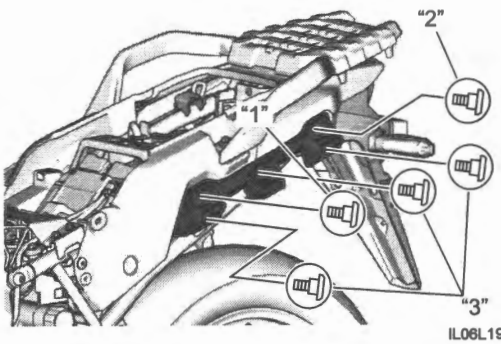

IL06L1940038-01

Front Fender Removal and Installation

BENL06L29406026

Refer to "Front Fork Assembly Removal and Installation" in Section 2B (Page 2B-3).

Rear Fender (Rear) Removal and Installation

BENL06L29406027

Removal

1) Remove the frame center cover. ☞(Page 9D-35)
2) Disconnect the turn signal lead wire coupler (1).

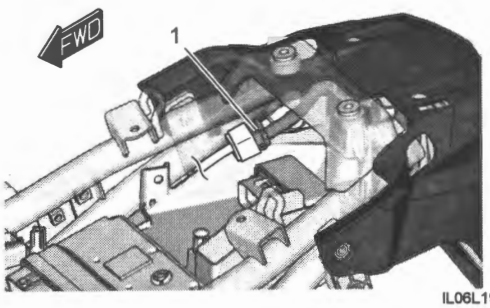

IL06L1940039-01

3) Remove the screws.
4) Remove the following parts as an assembly.
   - Rear fender rear (1)
   - Rear turn signals (2)
   - License plate light (3)

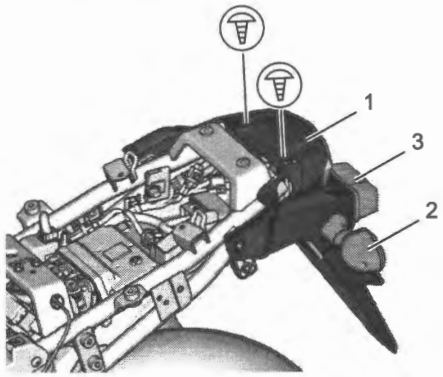

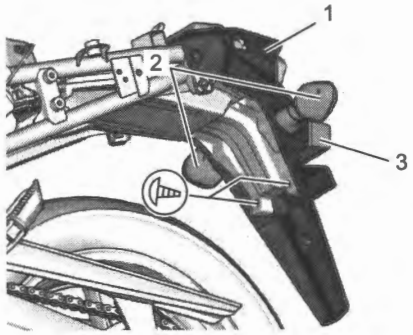

IL06L1940041-01

5) Disconnect the rear turn signal light lead wire couplers (1).and license plate light lead wire coupler (2).

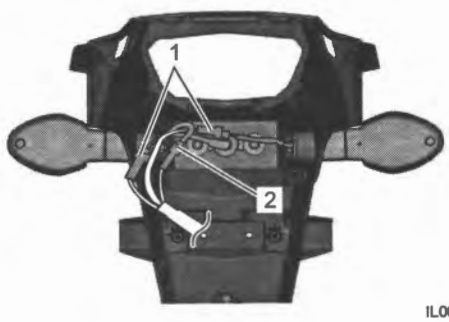

IL06L1940040-01

6) Remove the rear turn signal lights (1).

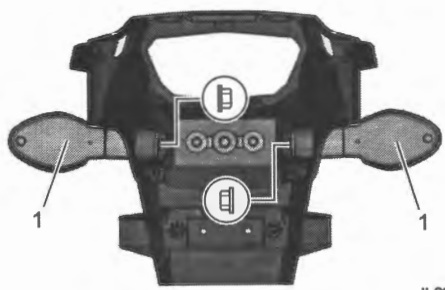

IL06L1940042-01

7) Remove the license plate light (1).

8) If necessary, remove the license plate cushion (2).

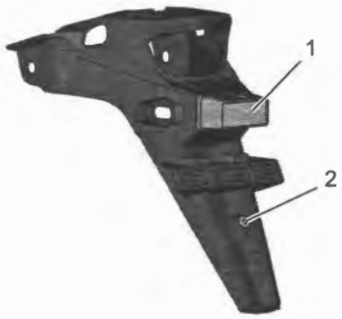

IL06L1940043-01

Installation

Install the rear fender rear in the reverse order of removal. Pay attention to the following point:

- Tighten the turn signal light nuts (1) to the specified torque.

Tightening torque
Rear turn signal light nut (a): 1.3 N·m (0.13 kgf-m, 0.95 lbf-ft)
Rear turn signal light nut (b): 5.5 N·m (0.56 kgf-m, 4.05 lbf-ft)

[A]

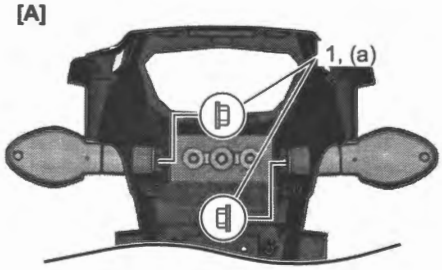

[B]

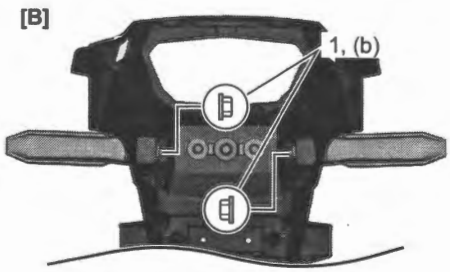

IL06L1940044-02

[A]:	For DL1050RQ
[B]:	For DL1050RC

Rear Fender (Front) Removal and Installation

BENL06L29406028

Removal

1) Remove the electric parts holder. ☞(Page 9D-40)
2) Remove the rear fender rear. ☞(Page 9D-31)
3) Remove the battery holder. ☞(Page 9D-39)
4) Remove the rear fender front (1).

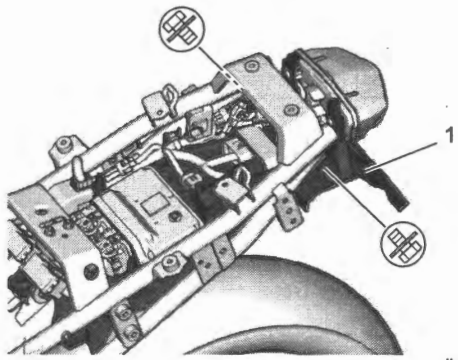

IL06L1940045-02

5) Remove the starter motor relay (1),relay box (2), clamp (3) and disconnect the rear combination light coupler (4).

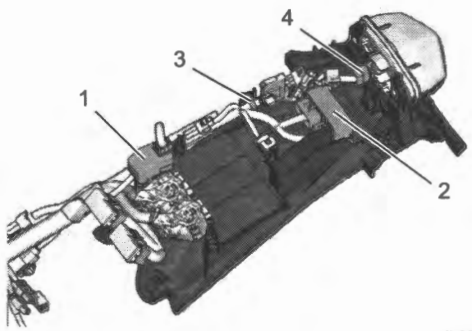

IL06L1940046-01

6) Remove the rear combination light (1) from the rear fender front (2).

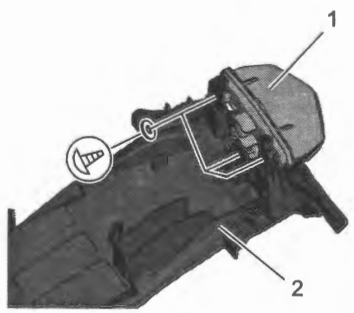

IL06L1940047-01

Installation
Install the rear fender rear in the reverse order of removal. Pay attention to the following point:

- Tighten the new rear fender bolts (1).

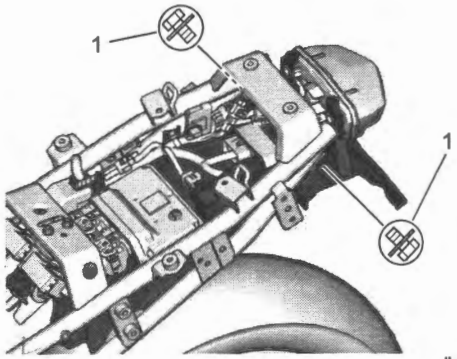

IL06L1940048-03

Fuel Tank Center Cover Removal and Installation

BENL06L29406029

Removal

1) Remove the rear front seat. ☞(Page 9D-27)
2) Remove the fuel tank center cover (1).

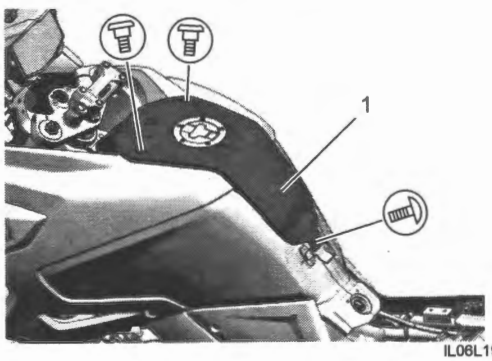

IL06L1940049-01

Installation
Install the fuel tank center cover in the reverse order of removal. Pay attention to the following point:

- Tighten the fuel tank cover bolt No.1 (1) and No.2 (2) to the specified torque.

Tightening torque
Fuel tank cover bolt No.1 (a): 5.5 N·m (0.56 kgf-m, 4.05 lbf-ft)
Fuel tank cover bolt No.2 (b): 5.5 N·m (0.56 kgf-m, 4.05 lbf-ft)

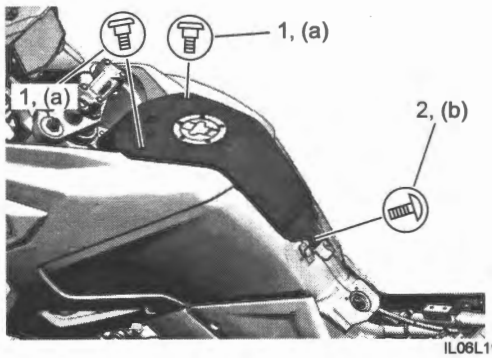

IL06L1940050-02

Side Cover Assembly Removal and Installation

BENL06L29406030

NOTE

The same procedures are applicable to both the right and left parts.

Removal

1) Remove the fuel tank center cover. ☞(Page 9D-33)
2) Remove the body center lower cowling.

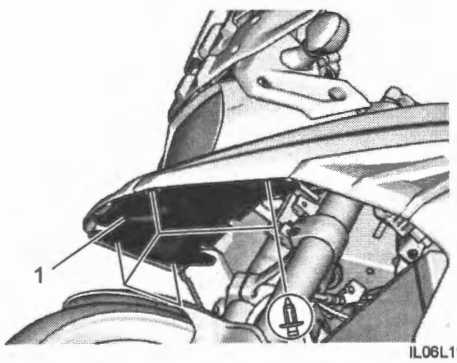

IL06L1940051-01

3) Disconnect the fastener (1).

4) Remove the side cover assembly (2) forward.

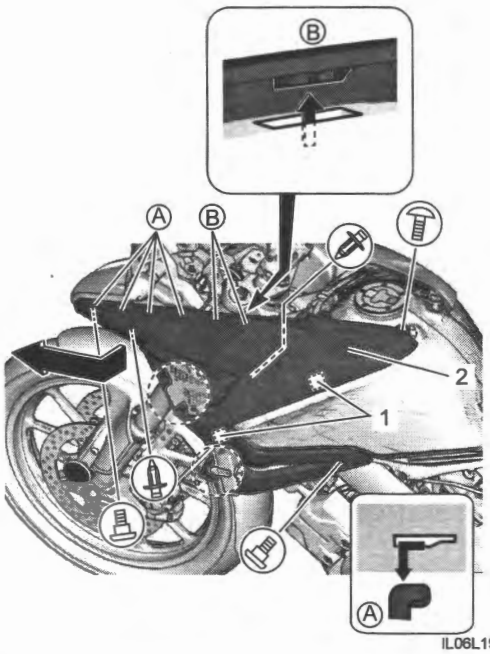

IL06L1940052-02

5) If necessary, remove the fuel tank side cover bracket (1).

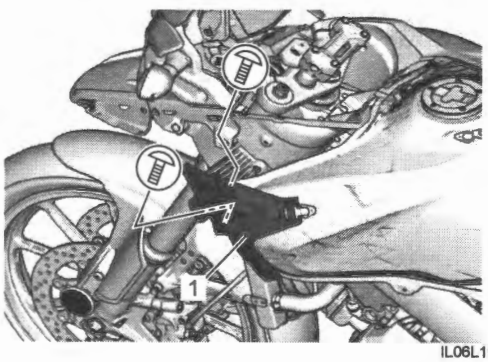

IL06L1940053-01

Installation

Install the side cover assembly in the reverse order of removal. Pay attention to the following point:

- Tighten fuel tank side cover bracket bolts(1) to the specified torque.

Tightening torque
Fuel tank side cover bracket bolt (a): 5.5 N·m (0.56 kgf-m, 4.05 lbf-ft)

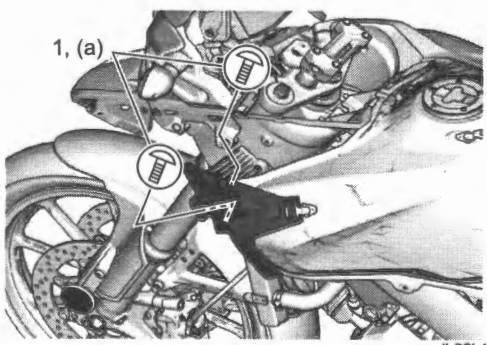

IL06L1940098-02

Side Cover Assembly Disassembly and Reassembly

BENL06L29406031

NOTE

The same procedures are applicable to both the right and left parts.

Disassembly

1) Remove the side inner lower cover (1).

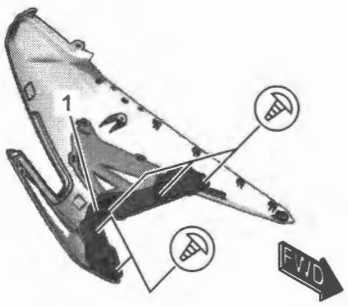

IL06L1940054-01

2) Remove the side cover No.2.

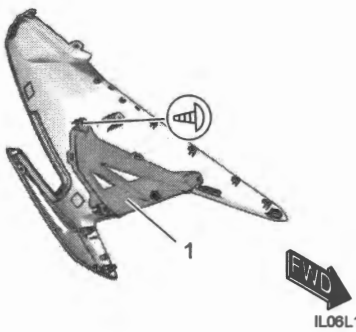

IL06L1940055-01

Reassembly

Assemble the side cover assembly in the reverse order of disassembly.

Frame Center Cover Removal and Installation

BENL06L29406032

1) Remove the electric parts holder. ☞(Page 9D-40)
2) Remove the sport carrier. ☞(Page 9D-29)
3) Remove the frame cover and rear frame cover (or side case upper bracket). ☞(Page 9D-30)
4) Remove the frame center cover (1).

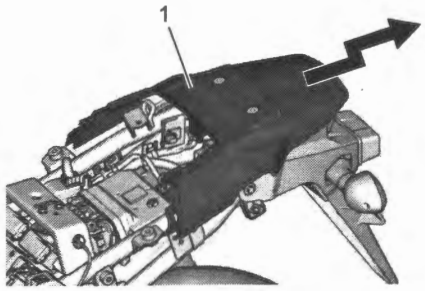

IL06L1940056-01

Windscreen / Windscreen Cover Removal and Installation

BENL06L29406033

Removal

For DL1050RQ

1) Remove the windscreen bolts.

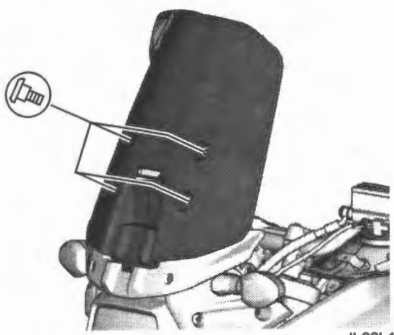

IL06L1940057-01

2) Remove the windscreen cover (1).

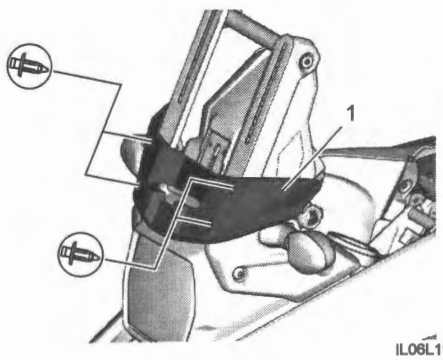

IL06L1940058-01

3) If necessary, remove the windscreen lock cover (1).

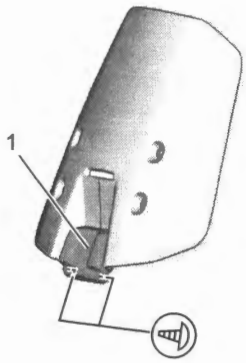

IL06L1940059-01

For DL1050RC

1) Remove the screen lever bolt (1).

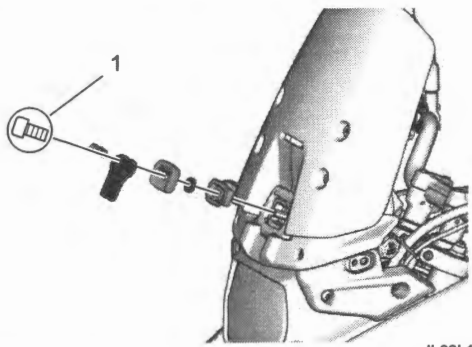

IL06L1940060-01

2) Remove the windscreen bolts.

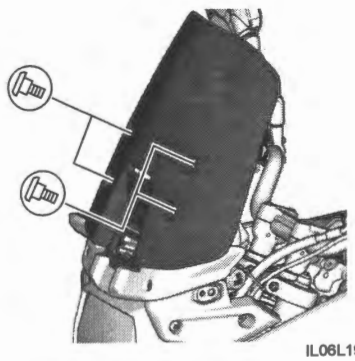

IL06L1940061-01

3) Remove the windscreen cover (1).

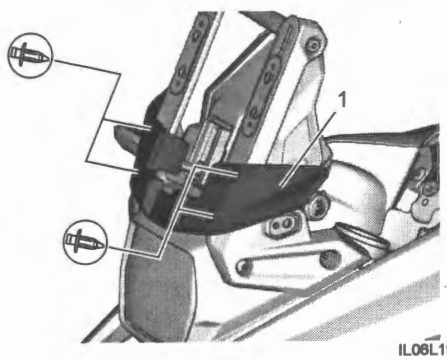

IL06L1940062-01

4) If necessary, remove the windscreen lock cover (1) and windscreen lock stopper (2).

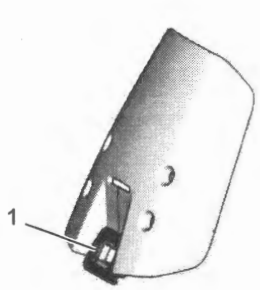

IL06L1940063-02

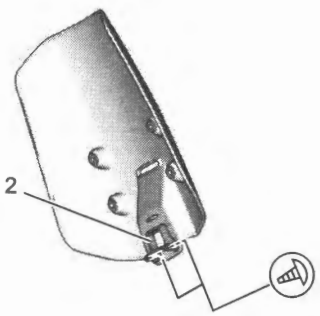

IL06L1940064-01

Installation

Install the windscreen in the reverse order of removal. Pay attention to the following points:

- Tighten the windscreen bolts (1) to the specified torque.

Tightening torque
Windscreen bolt (a): 10 N·m (1.0 kgf-m, 7.5 lbf-ft)

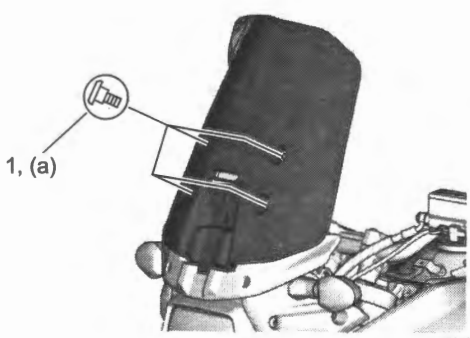

IL06L1940065-01

For DL1050RC

- Apply silicone grease to sliding surface of the windscreen lever hinge (1).

"A": Grease 99000–25100 (SUZUKI SILICONE GREASE)

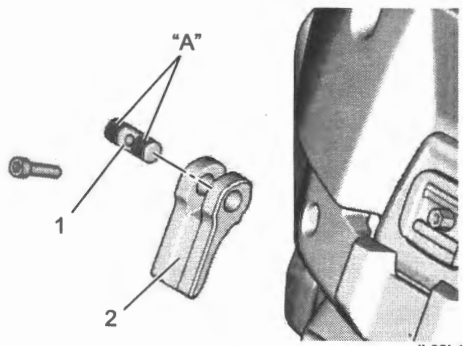

IL06L1940095-01

2. Windscreen lever

Knuckle Cover Removal and Installation

BENL06L29406034

Refer to "Knuckle Cover Construction (If Equipped)" (Page 9D-7).

Body Cowling Assembly Removal and Installation

BENL06L29406035

NOTE

The same procedures are applicable to both the right and left parts.

Removal

1) Remove the meter front panel. ☞(Page 9D-41)
2) Remove the windscreen brace. ☞(Page 9D-38)
3) Remove the side cover assembly. ☞(Page 9D-34)
4) Remove the side inner upper cover (1).

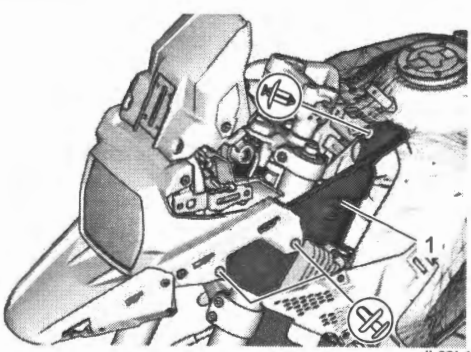

IL06L1940066-01

5) Disconnect the headlight lead wire coupler (1).
6) Remove the body cowling brace bolts (2).

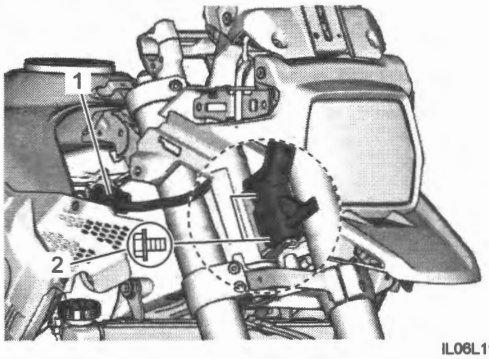

IL06L1940067-01

7) Remove the body cowling assembly by sliding the body cowling brace (1) to the right.

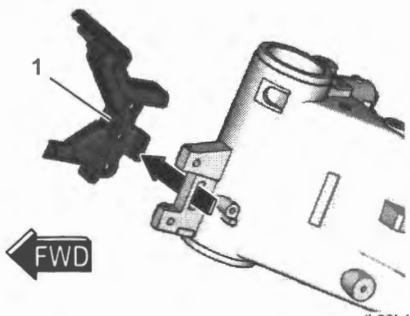

IL06L1940068-01

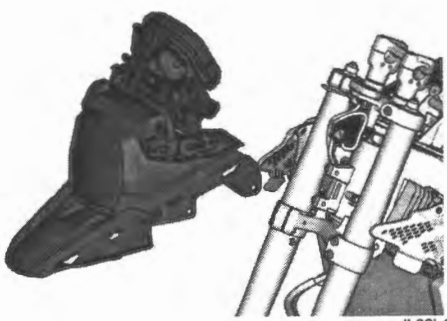

IL06L1940069-01

Installation
Install the body cowling assembly in the reverse order of removal.

Body Cowling Disassembly and Reassembly

BENL06L29406036

Disassembly

1) Remove the body cowling assembly. ☞(Page 9D-36)
2) Remove the body center cowling (1) and body cowling (2) as an assembly.

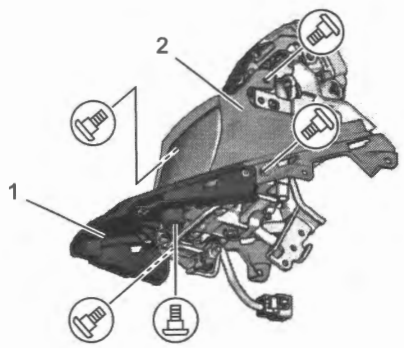

IL06L1940070-01

3) Remove the body center cowling (1) from the body cowling (2).

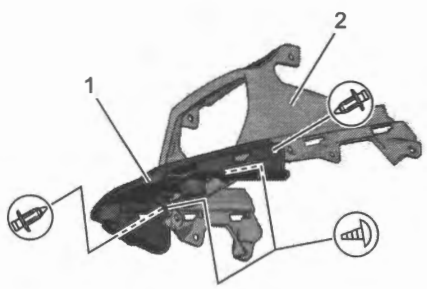

IL06L1940071-01

Reassembly
Assemble the body cowling in the reverse order of disassembly. Pay attention to the following point:

- After installation of the body cowling assembly, check the headlight aiming. ☞(Page 9B-4)

Windscreen Brace Removal and Installation

BENL06L29406037

NOTE

The same procedures are applicable to both the right and left parts.

Removal

1) Remove the windscreen and windscreen cover. ☞(Page 9D-35)
2) Remove the meter front panel. ☞(Page 9D-41)
3) Remove the windscreen brace rod (1).

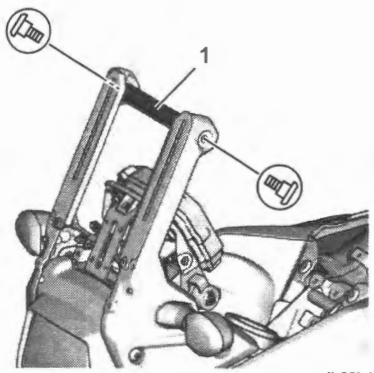

IL06L1940072-01

4) Disconnect the turn signal light lead wire coupler (1).

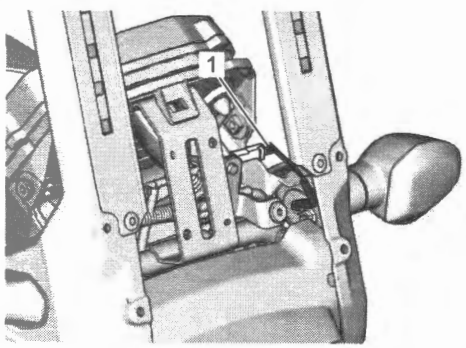

IL06L1940073-01

5) Remove the windscreen brace (1).

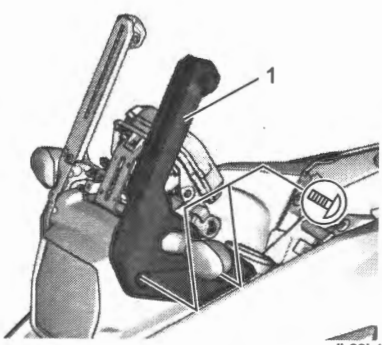

IL06L1940074-02

6) Remove the turn signal light (1).

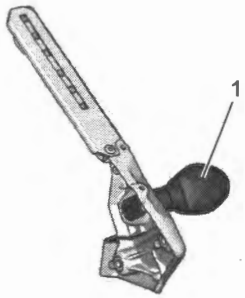

IL06L1940075-01

7) If necessary, remove the windscreen front slider (1), windscreen rear slider (2).

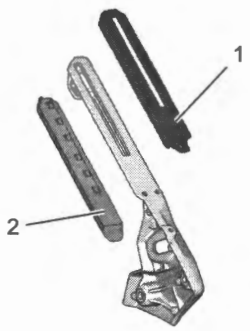

IL06L1940076-01

Installation

Install the windscreen in the reverse order of removal.
Pay attention to the following point:

- Tighten the new windscreen brace rod bolts (1).

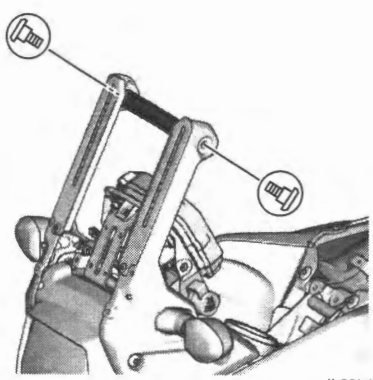

IL06L1940077-02

Pivot Cover Removal and Installation

BENL06L29406038

NOTE

The same procedures are applicable to both the right and left parts.

Removal

1) Remove the pivot cover (1).

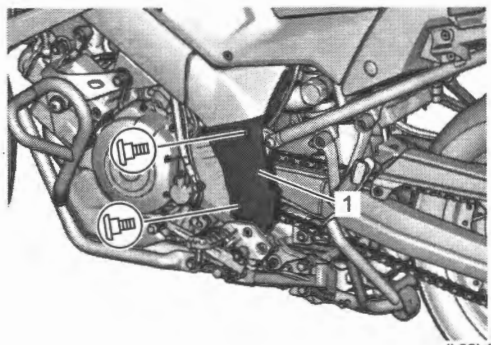

IL06L1940078-01

Installation

Install the pivot cover in the reverse order of removal.

Battery Holder Removal and Installation

BENL06L29406039

Removal

1) Remove the frame cover. ☞(Page 9D-30)
2) Remove the battery. ☞(Page 1J-10)
3) Remove the fuse boxes (1) from the battery holder lid (2).

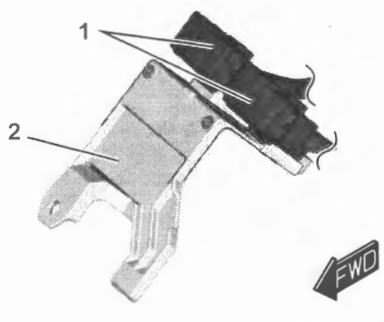

IL06L1940079-01

4) Remove the screws and bolts.

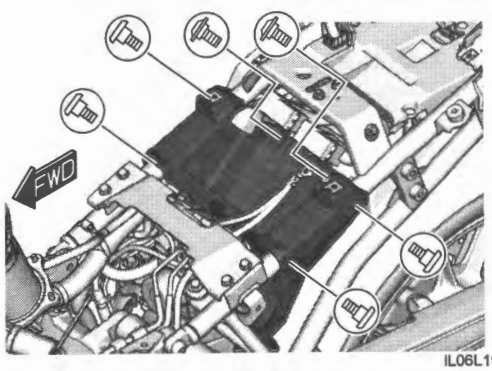

IL06L1940080-03

5) Remove the clamp (1).

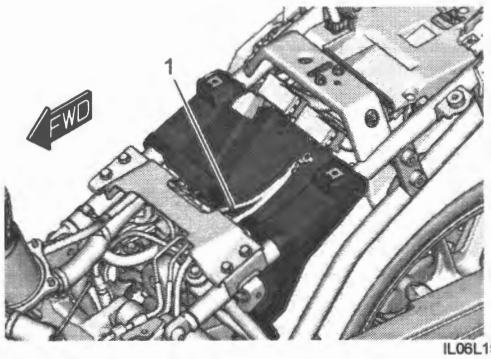

IL06L1940081-01

6) Disconnect the rear wheel speed sensor lead wire coupler (1).

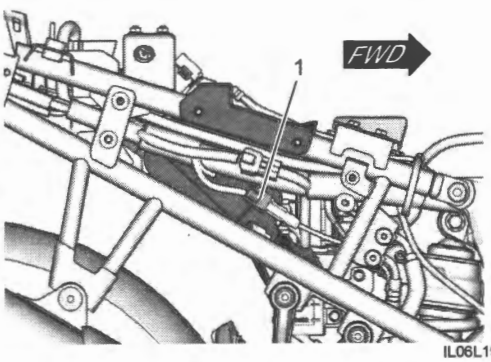

IL06L1940082-01

7) Remove the clamps (1) so that the Rear wheel speed sensor lead wire (2) loose.

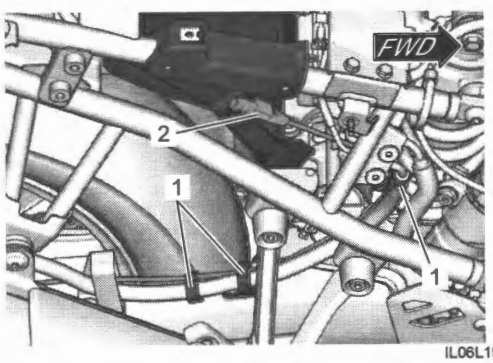

IL06L1940083-01

8) Move up the battery holder (1) and remove the clamps (2).

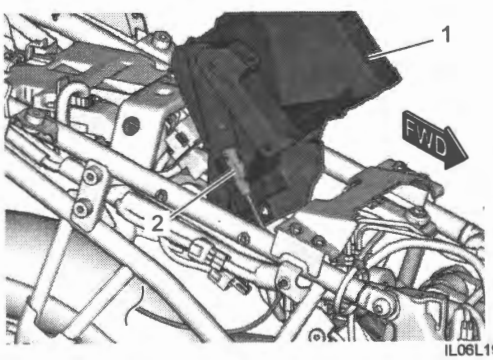

IL06L1940084-01

Installation

Install the battery holder in the reverse order of removal. Pay attention to the following points:

- Tighten the new battery holder bolts No.1(1) and new battery holder bolts No.2 (2) to the specified torque.

Tightening torque
Battery holder bolt No.1 (a): 4.5 N·m (0.46 kgf-m, 3.35 lbf-ft)

Tightening torque
Battery holder bolt No.2 (b): 10 N·m (1.0 kgf-m, 7.5 lbf-ft)

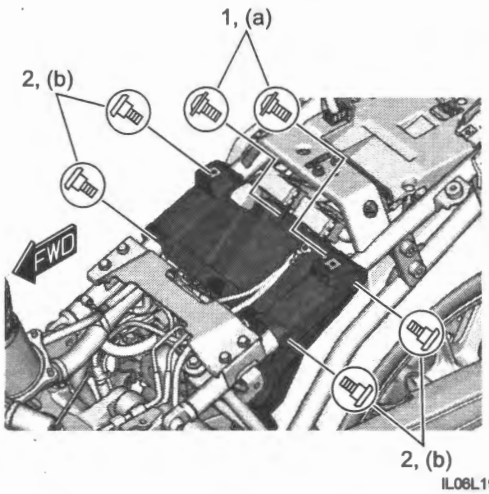

IL06L1940100-02

- Install the rear wheel speed sensor as shown in the front wheel speed sensor routing diagram. Refer to "Rear Wheel Speed Sensor Routing Diagram" in Section 4E (Page 4E-9).

Electric Parts Holder Removal and Installation

BENL06L29406040

Removal

1) Remove the rear seat. ☞(Page 9D-27)
2) Remove the electric parts holder (1).

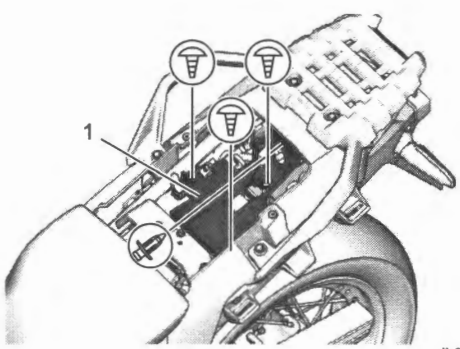

IL06L1940085-01

3) Disconnect the clamps (1).



IL06L1940086-01

4) Disconnect the DC socket coupler (1). (For DL1050RC)
5) Remove the clamp (2) and coupler (3) from the electric parts holder.

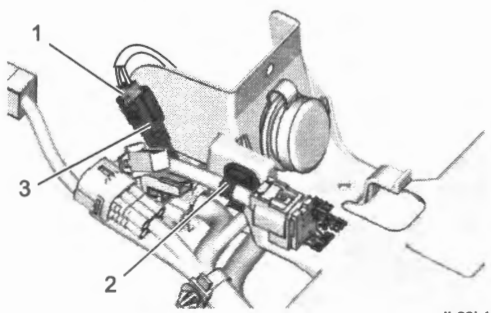

IL06L1940101-01

6) Remove the DC socket nut (1).
7) Remove the DC socket (2) from the electric parts holder.

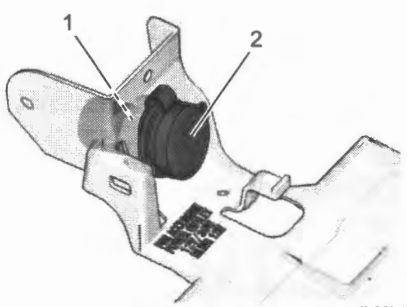

IL06L1940102-01

Installation
Install the electric parts holder in the reverse order of removal. Pay attention to the following point:

- Tighten the DC socket nut (1) to the specified torque.

Tightening torque
DC socket nut (a): 2.8 N·m (0.29 kgf-m, 2.10 lbf-ft)

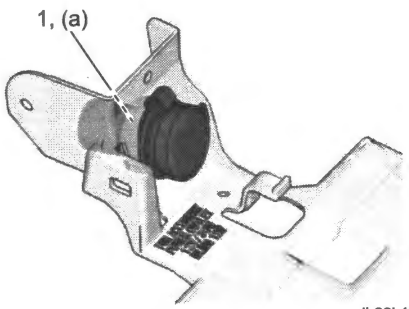

IL06L1940103-01

Meter Front Panel / Meter Rear Panel Removal and Installation

BENL06L29406041

Removal
1) Remove the windscreen and windscreen cover. ☞(Page 9D-35)
2) Remove the meter front panel (1).

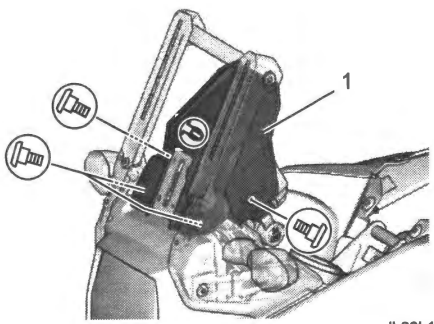

IL06L1940087-01

3) Remove the body cowling assembly. ☞(Page 9D-36)
4) Disassembly the body cowling assembly. ☞(Page 9D-37)
5) Remove the combination meter. ☞(Page 9C-16)
6) Disconnect the USB socket lead wire coupler and remove the USB socket (1).

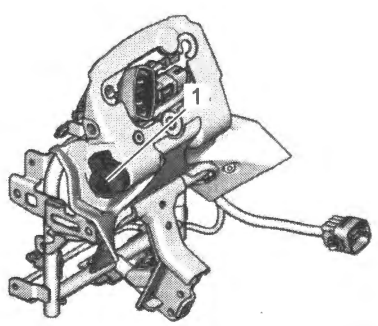

IL06L1940088-01

7) Remove the meter rear panel (1).

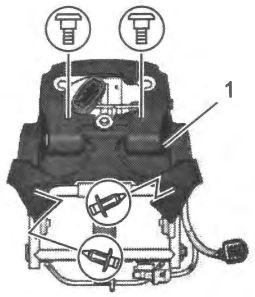

IL06L1940089-02

Installation
Install the meter front panel and meter rear panel in the reverse order of removal.

Specifications

Tightening Torque Specifications

BENL06L29407001

Fastening part	Tightening torque			Note
	N·m	kgf-m	lbf-ft	
Front seat bolt	5.5	0.56	4.05	☞(Page 9D-28)
Striker support bracket nut	5.5	0.56	4.05	☞(Page 9D-29)
Rear turn signal light nut	1.3	0.13	0.95	☞(Page 9D-32)
Rear turn signal light nut	5.5	0.56	4.05	☞(Page 9D-32)
Fuel tank cover bolt No.1	5.5	0.56	4.05	☞(Page 9D-33)
Fuel tank cover bolt No.2	5.5	0.56	4.05	☞(Page 9D-33)
Fuel tank side cover bracket bolt	5.5	0.56	4.05	☞(Page 9D-34)
Windscreen bolt	10	1.0	7.5	☞(Page 9D-36)
Battery holder bolt No.1	4.5	0.46	3.35	☞(Page 9D-40)
Battery holder bolt No.2	10	1.0	7.5	☞(Page 9D-40)
DC socket nut	2.8	0.29	2.10	☞(Page 9D-41)

Reference:
For the tightening torques of fasteners not specified in this page, refer to:
"Windscreen Construction" (Page 9D-6)
"Knuckle Cover Construction (If Equipped)" (Page 9D-7)
"Front Fender Construction" (Page 9D-9)
"Fuel Tank Cover Construction" (Page 9D-12)
"Rear Fender Construction" (Page 9D-15)
"Sport Carrier Construction" (Page 9D-22)
"Fasteners Information" in Section 0C (Page 0C-10)

Special Tools and Equipment

Recommended Service Material

BENL06L29408001

Material	SUZUKI recommended product or Specification		Note
Grease	SUZUKI SILICONE GREASE	P/No.: 99000–25100	☞(Page 9D-36)

NOTE

Required service material(s) is also described in:
"Body Cowling Construction" (Page 9D-5)

Body Structure

Repair Instructions

Frame Construction

BENL06L29506001

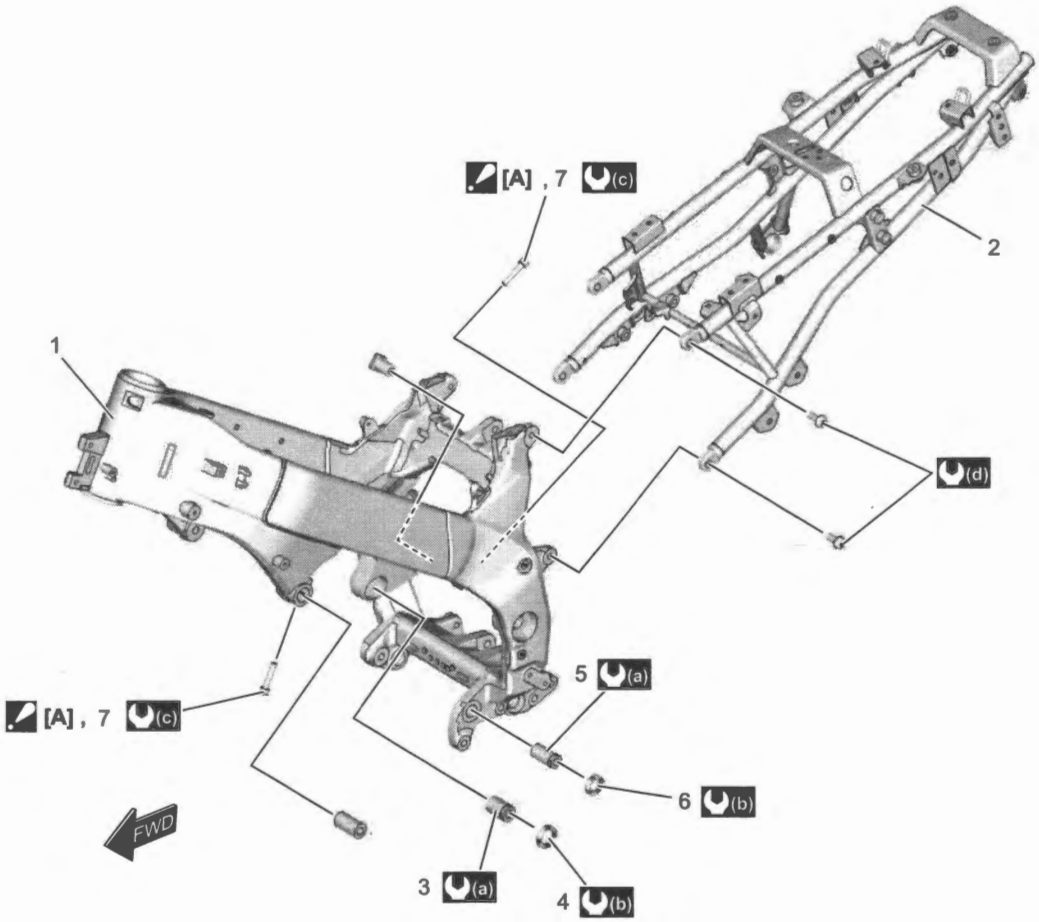

IL06L1950001-02

[A]: Tighten the engine mounting spacer bolts after tightening crank case adjust bolts and nuts.	4. Crank case adjuster center nut	(a) : 12 N·m (1.2 kgf-m, 9.0 lbf-ft)
1. Frame	5. Crank case adjuster lower bolt	(b) : 45 N·m (4.5 kgf-m, 32.5 lbf-ft)
2. Seat rail	6. Crank case adjuster lower nut	(c) : 23 N·m (2.3 kgf-m, 17.0 lbf-ft)
3. Crank case adjuster center bolt	7. Engine mounting spacer bolt	(d) : 50 N·m (5.0 kgf-m, 36.5 lbf-ft)

Front Footrest Construction

BENL06L29506002

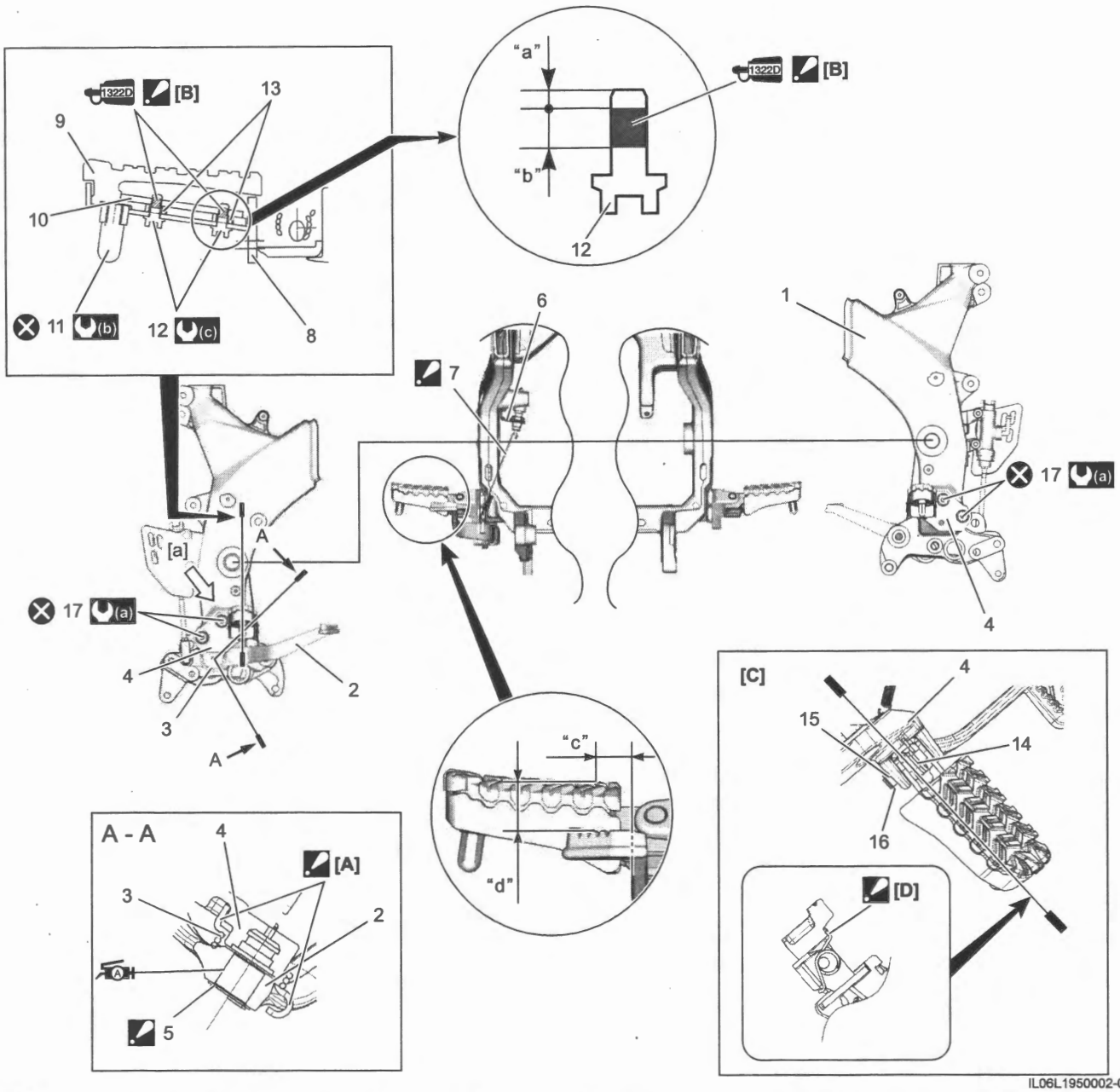

IL06L1950002-02

[A]: Hook the spring ends to groove of front footrest bracket and bottom of rear brake pedal as shown in the figure.	8. Front footrest bar	(b) : 18 N·m (1.8 kgf-m, 13.5 lbf-ft)
[B]: Apply thread lock to the bolts as shown area.	9. Front footrest rubber	(c) : 5 N·m (0.5 kgf-m, 3.70 lbf-ft)
[C]: View [a]	10. Front footrest rubber plate	"a": 2 mm (0.079 in)
[D]: Hook the front footrest spring end to the groove of the front footrest.	11. Bank sensor bolt	"b": 5 mm (0.20 in)
1. Frame	12. Footrest bar bolt	"c": 18 mm (0.71 in)
2. Rear brake pedal	13. Front footrest rubber spacer	"d": 20 – 30 mm (0.79 – 1.18 in)
3. Rear brake pedal spring	14. Front footrest spring	1322D : Apply thread lock to thread part.
4. Front footrest bracket	15. Front footrest pin	: Apply grease to sliding surface.
5. Brake pedal clip : Assemble the clip with sharp edge side in.	16. Front footrest E-ring	: Do not reuse.
6. Rear brake switch	17. Front footrest bracket bolt	
7. Rear brake switch spring : Install the rear brake switch spring in correct direction as shown.	(a) : 26 N·m (2.7 kgf-m, 19.5 lbf-ft)	

Front Footrest Removal and Installation

BENL06L29506003

Refer to "Front Footrest Construction" (Page 9E-2).

Pillion Footrest Construction

BENL06L29506004

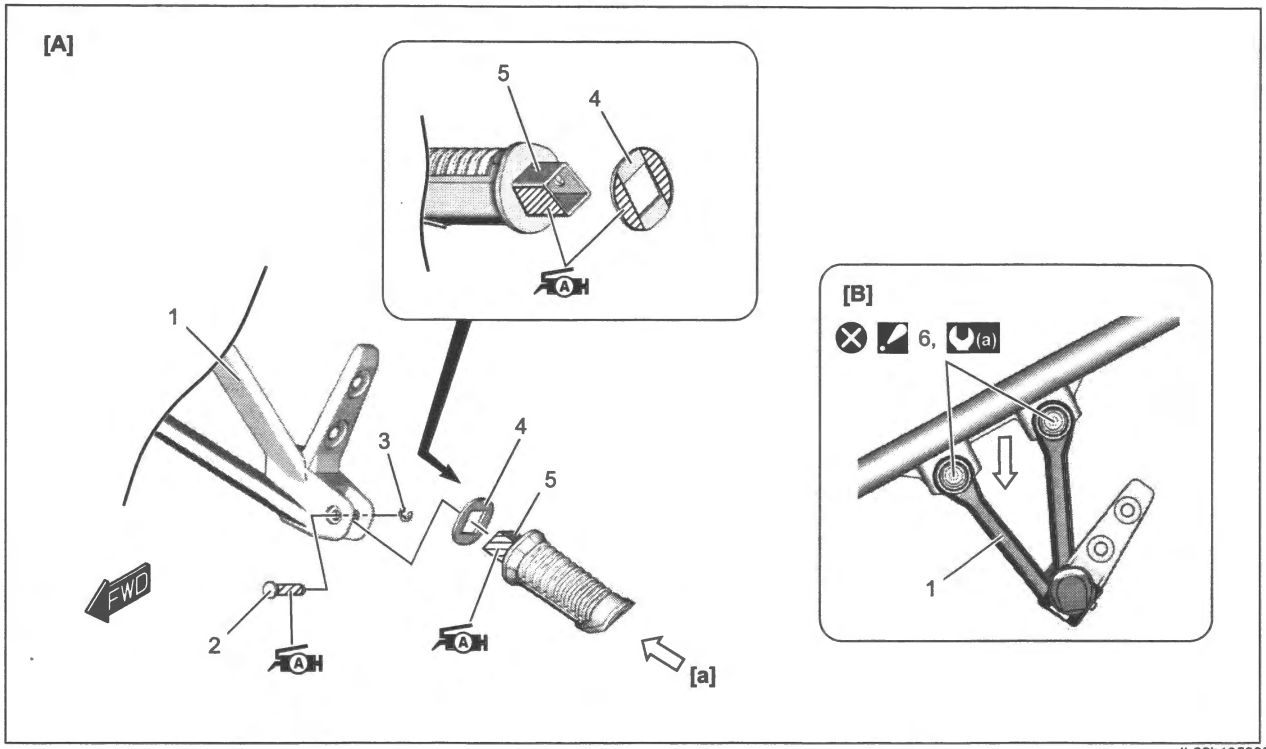

IL06L1950003-02

[A]: LH parts are shown. The same procedures are applicable to RH parts.	3. Pillion footrest E-ring	(a) : 23 N·m (2.3 kgf-m, 17.0 lbf-ft)
[B]: View [a]	4. Footrest rubber washer	: Apply grease to sliding surface.
1. Pillion footrest bracket	5. Pillion footrest bar	: Do not reuse.
2. Pillion footrest pin	6. Pillion footrest bracket bolt : Tighten the pillion footrest bracket bolts while pressing the pillion footrest bracket in arrow direction.	

Pillion Footrest Removal and Installation

BENL06L29506005

Refer to "Pillion Footrest Construction" (Page 9E-3).

Side-stand Construction

BENL06L29506006

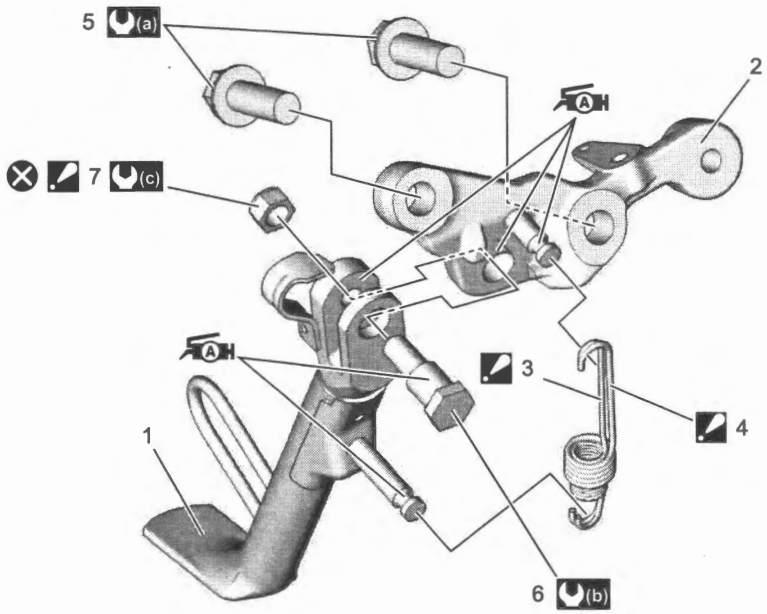

IL06L1950004-01

1. Side-stand	5. Side-stand bracket bolt	(b) : 50 N·m (5.0 kgf-m, 36.0 lbf-ft)
2. Side-stand bracket	6. Side-stand bolt	(c) : 40 N·m (4.0 kgf-m, 29.0 lbf-ft)
3. Side-stand inner spring : Assemble the side-stand inner spring as shown direction in the figure.	7. Side-stand nut : Tighten the side-stand nut to the specified torque while holding the side-stand bolt.	: Apply grease to sliding surface.
4. Side-stand outer spring : Assemble the side-stand outer spring as shown direction in the figure.	(a) : 95 N·m (9.5 kgf-m, 68.5 lbf-ft)	: Do not reuse.

Side-stand Removal and Installation

BENL06L29506007

Refer to "Side-stand Construction" (Page 9E-4).

Removal

1) Support the motorcycle with a jack.

⚠ CAUTION

- **Do not support the motorcycle with the center exhaust pipes.**
- **Make sure that the motorcycle is supported securely.**

2) Remove the gearshift lever. ☞(Page 5B-12)
3) Remove the side-stand.

Installation

Install the side-stand.

Center Stand Construction (If Equipped)

BENL06L29506008

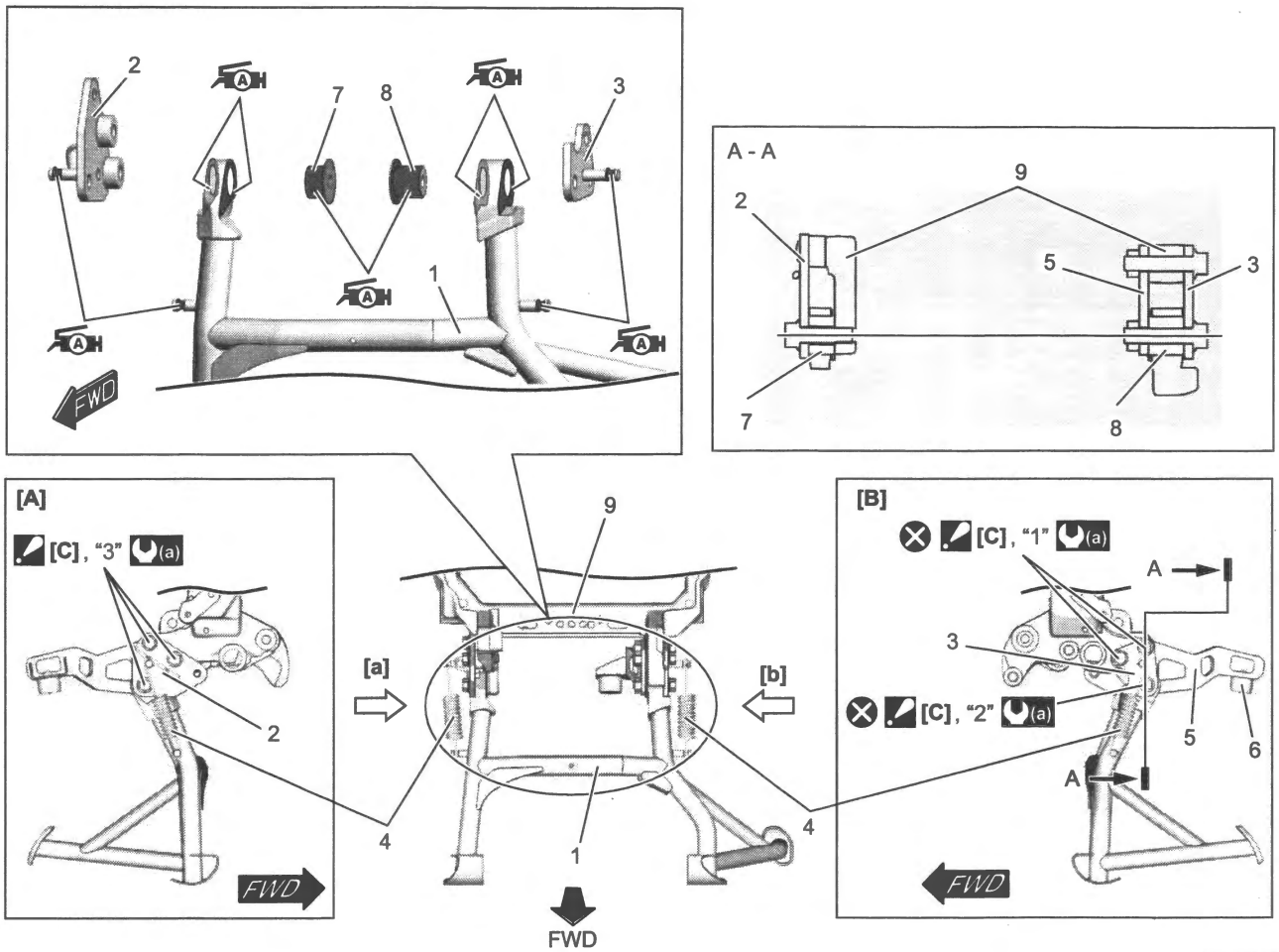

IL06L1950005-02

[A]: View [a]	3. Center stand plate (LH)	8. Center stand spacer (LH)
[B]: View [b]	4. Center stand spring : Install the center stand spring in correct direction as shown.	9. Frame
[C]: Tighten the bolts in order of "1" → "2" → "3".	5. Center stand plate	(a): 50 N·m (5.1 kgf-m, 37.0 lbf-ft)
1. Center stand	6. Cushion	: Apply grease to sliding surface.
2. Center stand plate (RH)	7. Center stand spacer (RH)	: Do not reuse.

Center Stand Removal and Installation (If Equipped)

BENL06L29506009

Refer to "Center Stand Construction (If Equipped)" (Page 9E-5).

Accessory Bar Construction (If Equipped)

BENL06L29506010

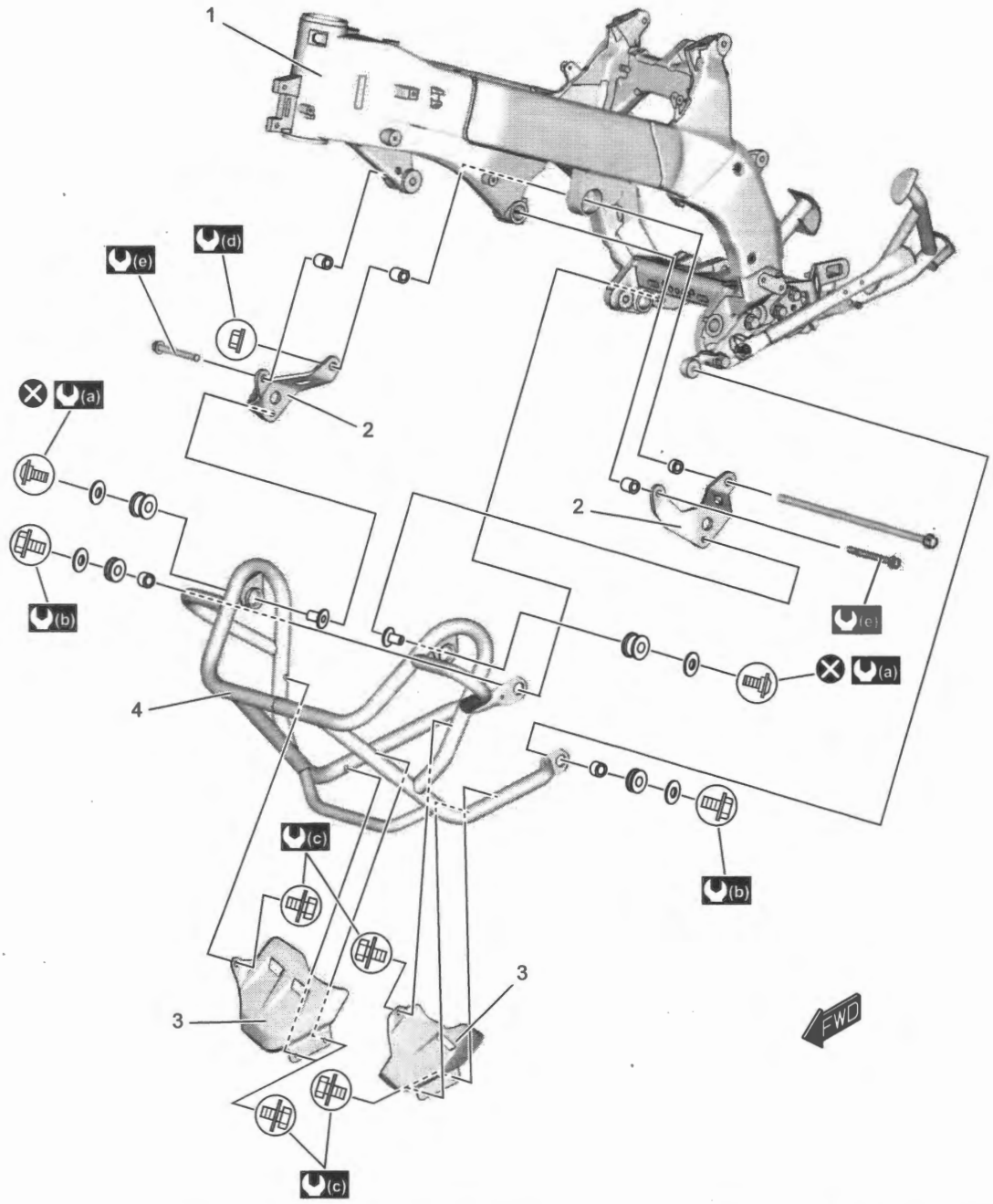

IL06L1950006-02

1. Frame	(a) : 30 N·m (3.1 kgf-m, 22.5 lbf-ft)	(e) : 55 N·m (5.6 kgf-m, 40.5lbf-ft)
2. Accessory bar bracket	(b) : 26 N·m (2.7 kgf-m, 19.5 lbf-ft)	⊗ : Do not reuse.
3. Under cover	(c) : 11 N·m (1.1 kgf-m, 8.5 lbf-ft)	
4. Accessory bar	(d) : 93 N·m (9.5 kgf-m, 68.5lbf-ft)	

Accessory Bar Removal and Installation

BENL06L29506011

Refer to "Accessory Bar Construction (If Equipped)" (Page 9E-6).

Specifications

Tightening Torque Specifications

BENL06L29507001

Reference:
For the tightening torques of fasteners not specified in this page, refer to:
"Frame Construction" (Page 9E-1)
"Front Footrest Construction" (Page 9E-2)
"Pillion Footrest Construction" (Page 9E-3)
"Side-stand Construction" (Page 9E-4)
"Center Stand Construction (If Equipped)" (Page 9E-5)
"Accessory Bar Construction (If Equipped)" (Page 9E-6)
"Fasteners Information" in Section 0C (Page 0C-10)

Special Tools and Equipment

Recommended Service Material

BENL06L29508001

NOTE

Required service material(s) is also described in:
"Front Footrest Construction" (Page 9E-2)
"Pillion Footrest Construction" (Page 9E-3)
"Side-stand Construction" (Page 9E-4)
"Center Stand Construction (If Equipped)" (Page 9E-5)

Section 10

Control Systems

CONTENTS

Precautions 10-1
Precautions 10-1
Precautions for Engine 10-1

Cruise Control System 10A-1
Precautions 10A-1
Precautions for Cruise Control System 10A-1
Schematic and Routing Diagram 10A-1
Cruise Control System Wiring Diagram 10A-1
Component Location 10A-1
Cruise Control System Component Location 10A-1
Diagnostic Information and Procedures 10A-1
Cruise Control System Check 10A-1
Scan Tool Data 10A-3
Cruise Control System Symptom Diagnosis 10A-3
Cruise Control System Circuits Inspection 10A-4
Repair Instructions 10A-4
Cruise Control Switch Inspection 10A-4
Cruise Control Switch Removal and Installation 10A-4
"RES / UP" Switch / "SET / DOWN" Switch Inspection 10A-4
"RES / UP" Switch / "SET / DOWN" Switch Removal and Installation 10A-4
Cruise Control Cancel Switch Inspection 10A-4
Cruise Control Cancel Switch Removal and Installation 10A-4

Immobilizer Control System 10C-1
Precautions 10C-1
Precautions for DTC Trouble Shooting 10C-1
Precautions for Immobilizer System 10C-1
General Description 10C-1
Self-Diagnosis Function 10C-1
Comparison Table of DTC Name 10C-1
Schematic and Routing Diagram 10C-1
Immobilizer Control System Wiring Diagram 10C-1
Component Location 10C-1
Immobilizer Control System Component Location 10C-1
Diagnostic Information and Procedures 10C-2
Immobilizer Control System Check 10C-2
DTC Check 10C-3
DTC Clearance 10C-3
DTC Table 10C-3
Fail-Safe Table 10C-3
DTC P1610 (C42) 10C-4
Immobilizer Control System Circuits Inspection 10C-7
Repair Instructions 10C-7
Immobilizer Antenna Removal and Installation 10C-7
Ignition Key Registration 10C-7

Communication System 10H-1
Precautions 10H-1
Precautions for DTC Trouble Shooting 10H-1
General Description 10H-1
Self-Diagnosis Function 10H-1
Schematic and Routing Diagram 10H-2
CAN Communication System Wiring Diagram .. 10H-2
Component Location 10H-3
CAN Communication System Component Location 10H-3
Diagnostic Information and Procedures 10H-4
CAN Communication Check 10H-4
DTC Check 10H-5
DTC Clearance 10H-5
CAN DTC (Lost Communication and Communication Bus Off) Table 10H-6
CAN Signal Reference Waveform 10H-7
Troubleshooting for Lost Communication 10H-10
Troubleshooting for Communication Bus Off .. 10H-15

Precautions

Precautions

Precautions for Engine

BENL06L2A000001

Refer to "General Precautions" in Section 00 (Page 00-1), "Precautions for Electrical Circuit Service" in Section 00 (Page 00-2), "Precautions for Circuit Tester" in Section 00 (Page 00-8) and "Precautions for SDS-II" in Section 00 (Page 00-8).

Cruise Control System

Precautions

Precautions for Cruise Control System

BENL06L2A100001

Refer to "General Precautions" in Section 00 (Page 00-1), "Precautions for Electrical Circuit Service" in Section 00 (Page 00-2), "Precautions for Circuit Tester" in Section 00 (Page 00-8) and "Precautions for SDS-II" in Section 00 (Page 00-8).

NOTE

Cruise control system is controlled by ECM. If cruise control system is abnormal condition, a malfunction may be detected by engine control systems. ☞(Page 1A-9)

Schematic and Routing Diagram

Cruise Control System Wiring Diagram

BENL06L2A102001

Refer to "Engine Control System Wiring Diagram" in Section 1A (Page 1A-6).

Component Location

Cruise Control System Component Location

BENL06L2A103001

Refer to "Engine Control System Component Location" in Section 1A (Page 1A-8).

Diagnostic Information and Procedures

Cruise Control System Check

BENL06L2A104001

Refer to the following items for the details of each step.

Step 1

Customer complaint analysis

1) Perform customer complaint analysis. ☞(Page 10A-2)

Was customer complaint analysis performed?

Yes — Go to Step 2.

No — Perform customer complaint analysis.

Step 2

DTC check

1) Check for DTCs of ECM. ☞(Page 10A-3)

Is there any DTC(s)?

Yes — Check and repair according to applicable DTC troubleshooting, and go to Step 4.

No — Go to Step 3.

Step 3

Trouble symptom confirmation

1) Check trouble symptom. ☞(Page 10A-3)

Is trouble symptom identified?

Yes — Perform "Cruise Control System Symptom Diagnosis" (Page 10A-3), and go to Step 4.

No — Go to Step 4.

Step 4

Final confirmation test

1) Perform final confirmation test. ☞(Page 10A-3)

Does the trouble recur?

Yes — Go to Step 2.

No — End.

Step 1: Customer Complaint Analysis

Record details of the problem (failure, complaint) and how it occurred as described by the customer. For this purpose, use of such an inspection form such as following will facilitate collecting information to the point required for proper analysis and diagnosis.

NOTE

This form is a standard sample. The form should be modified according to conditions and characteristic of each market.

EXAMPLE: CUSTOMER PROBLEM INSPECTION FORM

User name:	**Model:**	**VIN:**	
Date of issue:	Date Reg.:	Date of problem:	Mileage:

MIL condition	□ Always ON / □ Sometimes ON / □ Always OFF / □ Good condition
Master warning indicator light condition	□ Always ON / □ Sometimes ON / □ Always OFF / □ Good condition
Malfunction display/code	User mode: □ No display / □ Malfunction display ( )
	Dealer mode: □ No code / □ Malfunction code ( )

PROBLEM SYMPTOMS
□ Cruise control cannot be on-standby □ Cruise control cannot be set □ Cruise control cannot be canceled □ Set speed cannot be changed □ Cruise control indicator and/or cruise control indicator light dose not turn ON or OFF
□ OTHERS:

MOTORCYCLE/ENVIRONMENTAL CONDITION WHEN PROBLEM OCCURS	
Environmental condition	
Weather	□ Fair / □ Cloudy / □ Rain / □ Snow / □ Always / □ Other
Temperature	□ Hot / □ Warm / □ Cool / □ Cold (°C / °F) / □ Always
Frequency	□ Always / □ Sometimes (times / day, month) / □ Only once □ Under certain condition
Road	□ Urban / □ Suburb / □ Highway / □ Mountainous (□ Uphill / □ Downhill) □ Tarmacadam / □ Gravel / □ Other
Motorcycle condition	
Engine condition	□ Cold / □ Warming up phase / □ Warmed up / □ Always / □ Other at starting □ Immediately after start / □ Racing without load / □ Engine speed (r/min)
Motorcycle condition	During driving: □ Constant speed / □ Accelerating / □ Decelerating □ Right hand corner / □ Left hand corner □ At stop / □ Motorcycle speed when problem occurs (km/h, mile/h) □ Other:

IL06L1A10001-03

Step 2: DTC Check
First, check DTC of ECM. ☞(Page 1A-11)

Step 3: Trouble Symptom Confirmation
Based on information obtained in "Step 1: Customer Complaint Analysis" (Page 10A-2), check trouble symptoms.

Step 4: Final Confirmation Test
Check that the problem symptom has gone and cruise control system is free from any abnormal conditions. If what has been repaired is related to the malfunction DTC, clear the DTC referring to "DTC Clearance" in Section 1A (Page 1A-12) and confirm that the DTC is not indicated, based on information obtained in "Step 1: Customer Complaint Analysis" (Page 10A-2).

Scan Tool Data

BENL06L2A104002

The associated data values of the cruise control system can be confirmed using a SDS-II. Refer to "Scan Tool Data" in Section 1A (Page 1A-21).

Cruise Control System Symptom Diagnosis

BENL06L2A104003

NOTE

Cruise control system is controlled by ECM. Before performing symptom diagnosis, check that no DTC is detected in ECM.

Condition	Possible cause	Correction / Reference Item
Cruise control cannot be on-standby	Faulty cruise control switch.	*Check cruise control switch. ☞(Page 10A-4)*
	Faulty wiring or grounding.	*Repair or replace.*
	Faulty ECM.	*Replace ECM after checking that none of above parts is faulty. ☞(Page 1C-2)*
Cruise control cannot be set	Faulty "SET / DOWN" switch.	*Check "SET / DOWN" switch. ☞(Page 10A-4)*
	Faulty wiring or grounding.	*Repair or replace.*
	Faulty ECM.	*Replace ECM after checking that none of above parts is faulty. ☞(Page 1C-2)*
Cruise control cannot be canceled	Faulty cruise control cancel switch.	*Check cruise control cancel switch. ☞(Page 10A-4)*
	Faulty wiring or grounding.	*Repair or replace.*
	Faulty ECM.	*Replace ECM after checking that none of above parts is faulty. ☞(Page 1C-2)*
Set speed cannot be changed	Faulty "RES / UP" Switch and "SET / DOWN" Switch.	*Check "RES / UP" Switch and "SET / DOWN" Switch. ☞(Page 10A-4)*
	Faulty wiring or grounding.	*Repair or replace.*
	Faulty ECM.	*Replace ECM after checking that none of above parts is faulty. ☞(Page 1C-2)*
Cruise control indicator and/or cruise control indicator light dose not turn ON or OFF	Faulty cruise control switch.	*Check cruise control switch. ☞(Page 10A-4)*
	Faulty "SET / DOWN" switch.	*Check "SET / DOWN" switch. ☞(Page 10A-4)*
	Faulty wiring or grounding.	*Repair or replace.*
	Faulty combination meter.	*Check combination meter. ☞(Page 9C-10)*
	Faulty ECM.	*Replace ECM after checking that none of above parts is faulty. ☞(Page 1C-2)*

Cruise Control System Circuits Inspection

BENL06L2A104004

Refer to "Engine Control System Circuits Inspection" in Section 1A (Page 1A-125).

Repair Instructions

Cruise Control Switch Inspection

BENL06L2A106001

1) Remove the air cleaner box. ☞(Page 1D-6)
2) Disconnect the right handle switch coupler (1).

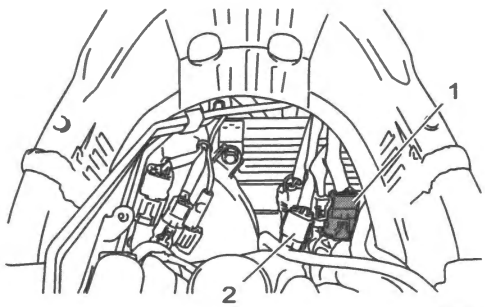

IL06L1A10003-01

2. Immobilizer antenna coupler (if equipped)

3) Inspect the cruise control switch for continuity with a circuit tester.
If any defect is found, replace the throttle grip assembly with a new one. ☞(Page 6B-6)

Terminal / Position	T1	T9
FREE		
PUSH	○	○

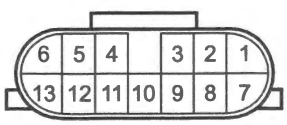

IL06L1A10002-01

4) After finishing the cruise control switch inspection, install the removed parts.

Cruise Control Switch Removal and Installation

BENL06L2A106002

Refer to "Throttle Grip Assembly Removal and Installation" in Section 6B (Page 6B-6).

"RES / UP" Switch / "SET / DOWN" Switch Inspection

BENL06L2A106003

Refer to "Select Switch Inspection" in Section 9C (Page 9C-20).

"RES / UP" Switch / "SET / DOWN" Switch Removal and Installation

BENL06L2A106004

Refer to "Left Handle Switch Removal and Installation" in Section 6B (Page 6B-7).

Cruise Control Cancel Switch Inspection

BENL06L2A106005

Refer to "Accelerator Position Sensor Inspection" in Section 1C (Page 1C-11).

Cruise Control Cancel Switch Removal and Installation

BENL06L2A106006

Refer to "Throttle Grip Assembly Removal and Installation" in Section 6B (Page 6B-6).

Immobilizer Control System

Precautions

Precautions for DTC Trouble Shooting

BENL06L2A300001

Refer to "General Precautions" in Section 00 (Page 00-1), "Precautions for Electrical Circuit Service" in Section 00 (Page 00-2), "Precautions for Circuit Tester" in Section 00 (Page 00-8) and "Precautions for SDS-II" in Section 00 (Page 00-8).

NOTE

- **Immobilizer control system is controlled by ECM.**
- **After repairing the trouble, clear the DTC using the special tool. ☞(Page 10C-3)**

Precautions for Immobilizer System

BENL06L2A300002

- Ignition key incorporates the transponder. Therefore, it is necessary to register the key ID to ECM, when ignition key is replaced or added.
- Do not turn ON ignition switch with ignition key in contact with or very close to another key. Or, the immobilizer control system may detect some abnormal condition and prevent the engine from starting.
- Do not turn ON ignition switch using ignition key with any type of metal wrapped around its grip or in contact with key. Or, the immobilizer control system may detect some abnormal condition and prevent the engine from starting.
- Do not leave ignition key in a place where temperature is high. High temperature may cause damage to the transponder built in the ignition key.
- Do not turn ignition switch to "ON" position by bringing radio antenna close to immobilizer antenna. Or, the immobilizer control system may detect some abnormal condition and prevent the engine from starting.

General Description

Self-Diagnosis Function

BENL06L2A301001

Refer to "Self-Diagnosis Function" in Section 1A (Page 1A-1).

Comparison Table of DTC Name

BENL06L2A301002

Refer to "Comparison Table of DTC Name" in Section 1A (Page 1A-5).

Schematic and Routing Diagram

Immobilizer Control System Wiring Diagram

BENL06L2A302001

Refer to "Engine Control System Wiring Diagram" in Section 1A (Page 1A-6).

Component Location

Immobilizer Control System Component Location

BENL06L2A303001

Refer to "Engine Control System Component Location" in Section 1A (Page 1A-8).

Diagnostic Information and Procedures

Immobilizer Control System Check

BENL06L2A304001

Step 1

Indicator light operation check

1) When turning the ignition switch ON, check if the indicator light (1) of immobilizer antenna operates as shown in figure.

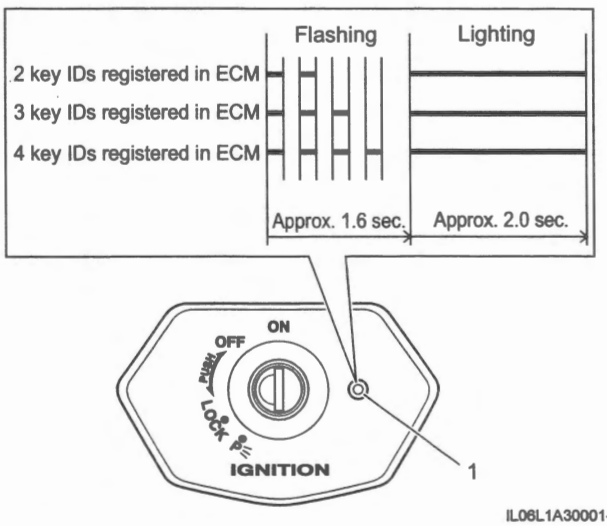

IL06L1A30001-01

Is check result OK?

Yes — Go to Step 2.

No — Go to Step 3.

Step 2

Engine start check

1) Start engine.

Does engine start?

Yes — Immobilizer control system is in good condition.

No — Go to Step 5.

Step 3

DTC check

Is DTC P1610 detected?

Yes — Go to troubleshooting for "DTC P1610 (C42)" (Page 10C-4).

No — Go to Step 4.

Step 4

Engine start check

1) Start engine.

Does engine start?

Yes — Check indicator light circuit. If indicator light circuit is in good condition, replace the immobilizer antenna. ☞(Page 10C-7)

No — Go to Step 5.

Step 5

DTC check

Is there any DTC(s)?

Yes — Go to troubleshooting for applicable DTC.

No — Perform "Engine Control System Check" in Section 1A (Page 1A-9).

DTC Check

BENL06L2A304002

Refer to "DTC Check" in Section 1A (Page 1A-11).

DTC Clearance

BENL06L2A304003

Refer to "DTC Clearance" in Section 1A (Page 1A-12).

DTC Table

BENL06L2A304004

DTC		DTC name	DTC detecting condition
—	C00	None	—
P1610	C42	Ignition Switch Signal Circuit ☞(Page 10C-4)	Any of the following conditions is met. • Verification error of key ID between ignition key and ECM. • Communication error between immobilizer antenna and ECM.

Fail-Safe Table

BENL06L2A304005

Refer to "Fail-Safe Table" in Section 1A (Page 1A-19).

DTC P1610 (C42)

BENL06L2A304006

DTC Detecting Condition and Trouble Area

DTC detecting condition	Trouble area
P1610 (C42): Ignition Switch Signal Circuit Any of the following conditions is met. • Verification error of key ID between ignition key and ECM. • Communication error between immobilizer antenna and ECM.	• Key ID is not registered in ECM • Immobilizer antenna • Immobilizer antenna circuit • ECM

Wiring Diagram

Refer to "Immobilizer Control System Wiring Diagram" (Page 10C-1).

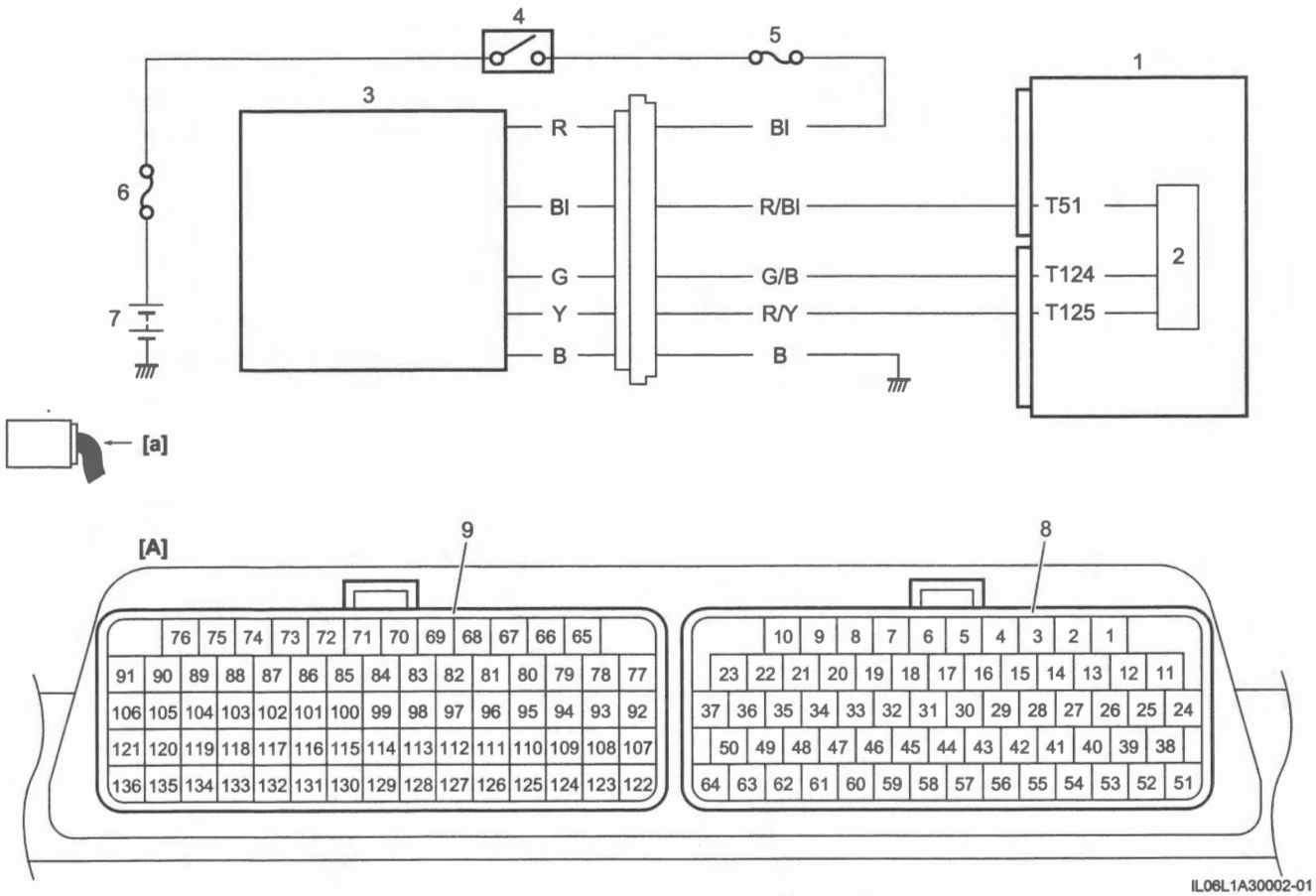

IL06L1A30002-01

[A]: ECM coupler "T" (View [a])	4. Ignition switch	8. Coupler "A"
1. ECM	5. Ignition fuse (10 A)	9. Coupler "B"
2. Immobilizer antenna communication and indicator light drive circuit	6. Main fuse (30 A)	
3. Immobilizer antenna	7. Battery	

Troubleshooting

Step 1
Engine start check

1) Start engine using the spare ignition key.

Does engine start?

Yes — End. (Ignition key was not registered)

No — Go to Step 2.

Step 2
Immobilizer antenna power supply circuit check

1) Turn the ignition switch OFF.
2) Disconnect the immobilizer antenna coupler. ☞(Page 10C-7)
3) Check for proper terminal connection to the immobilizer antenna coupler (1).
4) If connections are OK, turn the ignition switch ON.
5) Measure the voltage between "T5" and "T2".

Immobilizer antenna power supply voltage
[Standard]: Battery voltage

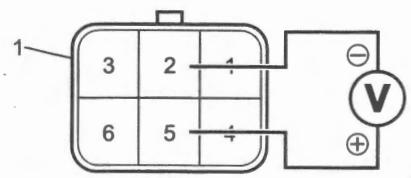

IL06L1A30003-01

Is check result OK?

Yes — Go to Step 4.

No — Go to Step 3.

Step 3
Immobilizer antenna ground circuit check

1) Measure the voltage between "T5" at the immobilizer antenna coupler (1) and ground.

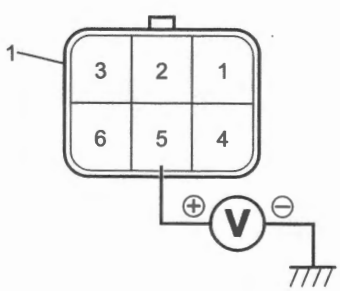

IL06L1A30004-01

Is voltage same as Step 3?

Yes — Repair or replace the "T2" wire at the immobilizer antenna coupler.

No — Repair or replace the "T5" wire at the immobilizer antenna coupler.

Step 4
Immobilizer antenna signal circuit check

1) Turn the ignition switch OFF.
2) Disconnect the ECM coupler "B". ☞(Page 1C-2)
3) Check for proper terminal connection to the ECM coupler "B".
4) If connections are OK, check the following points.
   - Resistance
     - Between "T6" at the immobilizer antenna coupler (1) and "T124" at the ECM coupler "B" (2): less than 1 Ω
     - Between "T3" at the immobilizer antenna coupler and "T125" at the ECM coupler "B": less than 1 Ω

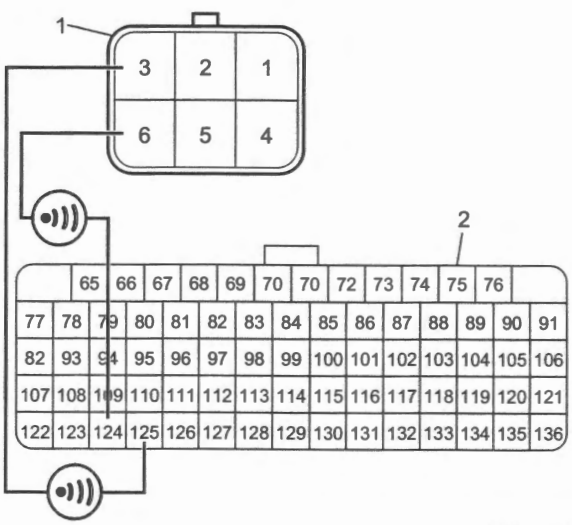

IL06L1A30005-01

   - Between "T6" at the immobilizer antenna coupler (1) and ground: infinity
   - Between "T3" at the immobilizer antenna coupler and ground: infinity

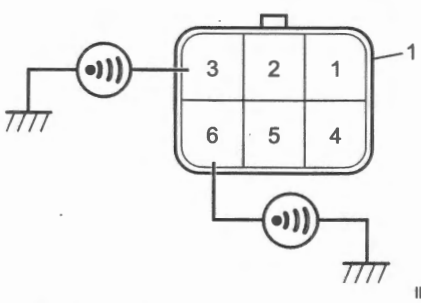

IL06L1A30006-01

   - Between "T6" and other terminal (2) at immobilizer antenna coupler (1): infinity

– Between "T3" and other terminal at immobilizer antenna coupler: infinity

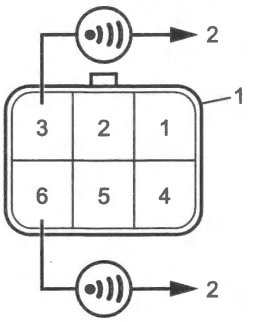

IL06L1A30007-02

- Voltage
  a. Connect the battery lead wire to battery, If the battery is removed to disconnect the ECM coupler.
  b. Turn the ignition switch ON.
  c. Check the following points
     – Between "T6" at the immobilizer antenna coupler (1) and ground: approx. 0 V
     – Between "T3" at the immobilizer antenna coupler and ground: approx. 0 V

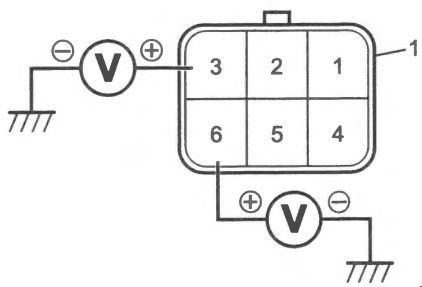

IL06L1A30008-01

Is check result OK?

Yes — Go to Step 5.

No — Repair or replace the defective wire harness.

Step 5

Immobilizer antenna check

1) Replace the immobilizer antenna. ☞(Page 10C-7)
2) Recheck DTC.

Is DTC P1610 still detected?

Yes — Replace the ECM and inspect it again. ☞(Page 1C-2)

No — End. (Immobilizer antenna was faulty)

Immobilizer Control System Circuits Inspection

BENL06L2A304007

Refer to "Engine Control System Circuits Inspection" in Section 1A (Page 1A-125).

Repair Instructions

Immobilizer Antenna Removal and Installation

BENL06L2A306001

NOTICE

The immobilizer antenna is a precision unit and can be easily damaged.
Handle the immobilizer antenna carefully and do not expose it to a large shock.

Removal

1) Remove the air cleaner box. ☞(Page 1D-6)
2) Disconnect the immobilizer antenna coupler (1).

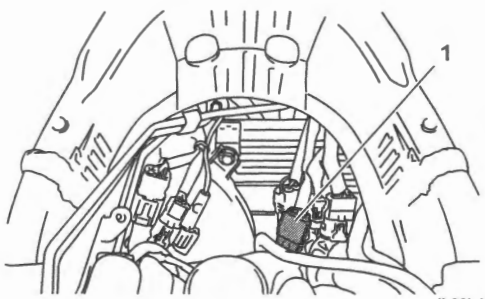

IL06L1A30010-01

3) Remove the ignition switch. ☞(Page 1H-9)
4) Remove the immobilizer antenna (1) from steering stem upper bracket (2).

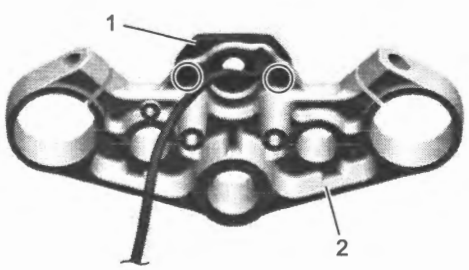

IL06L1A30009-01

Installation

Install the immobilizer antenna in the reverse order of removal.

Ignition Key Registration

BENL06L2A306002

- It is necessary to perform ignition key registration when carrying out any of the following points.
  - ECM is replaced.
  - Ignition switch is replaced.
  - All ignition keys are lost.

NOTE

- **If the ECM is replaced, at least 2 ignition keys must be registered into the ECM.**
- **If all ignition keys are lost, ECM should be replaced with a new one.**

- It is possible to register 4 ignition keys in ECM.

Communication System

Precautions

Precautions for DTC Trouble Shooting

BENL06L2A800001

Refer to "General Precautions" in Section 00 (Page 00-1), "Precautions for Electrical Circuit Service" in Section 00 (Page 00-2), "Precautions for Circuit Tester" in Section 00 (Page 00-8) and "Precautions for SDS-II" in Section 00 (Page 00-8).

NOTE

- **Diagnosing target control module / sensor only is not enough to accurately diagnose any trouble of CAN communication system. Check if other control module / sensor detected CAN DTC.**
- **It is possible that CAN system has trouble because of blown fuse or low battery voltage. Before troubleshooting, check that fuse, battery voltage and charging system condition are normal.**
- **CAN communication error is detected if connector of control modules or sensors being connected to CAN communication line or applicable fuse is connected / disconnected when ignition switch is ON.**
- **Check that no equipment or option other than original parts is connected onto CAN bus. If any of those items are connected, disconnect it before troubleshooting.**
- **If any DTCs together with "Lost Communication" (Reception error) and/or "Communication Bus Off" are displayed, start troubleshooting of CAN communication first.**
- **Before diagnosing trouble, check equipment of motorcycle being serviced as well as control modules and sensors connected to CAN communication line.**
- **After repairing the trouble, clear the DTC using the special tool. ☞(Page 10H-5)**

General Description

Self-Diagnosis Function

BENL06L2A801001

- ECM: refer to "Self-Diagnosis Function" in Section 1A (Page 1A-1).
- ABS control unit / HU: refer to "Self-diagnosis Function" in Section 4E (Page 4E-3).

Schematic and Routing Diagram

CAN Communication System Wiring Diagram

BENL06L2A802001

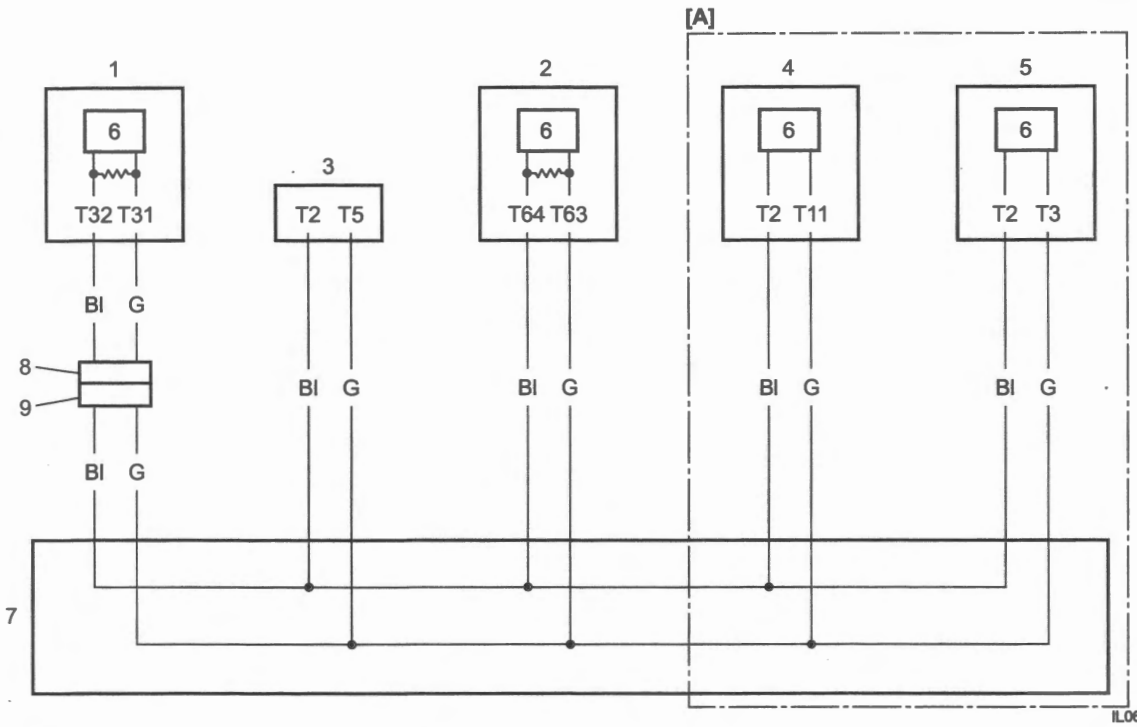

IL06L1A80001-01

[A]: With motion track brake system	4. ABS control unit/HU	8. Sub harness coupler
1. Combination meter	5. IMU	9. Main harness coupler
2. ECM	6. CAN driver	
3. Mode select coupler (6P)	7. J/C	

Terminal Arrangement of Wiring Harness Coupler (View [a])

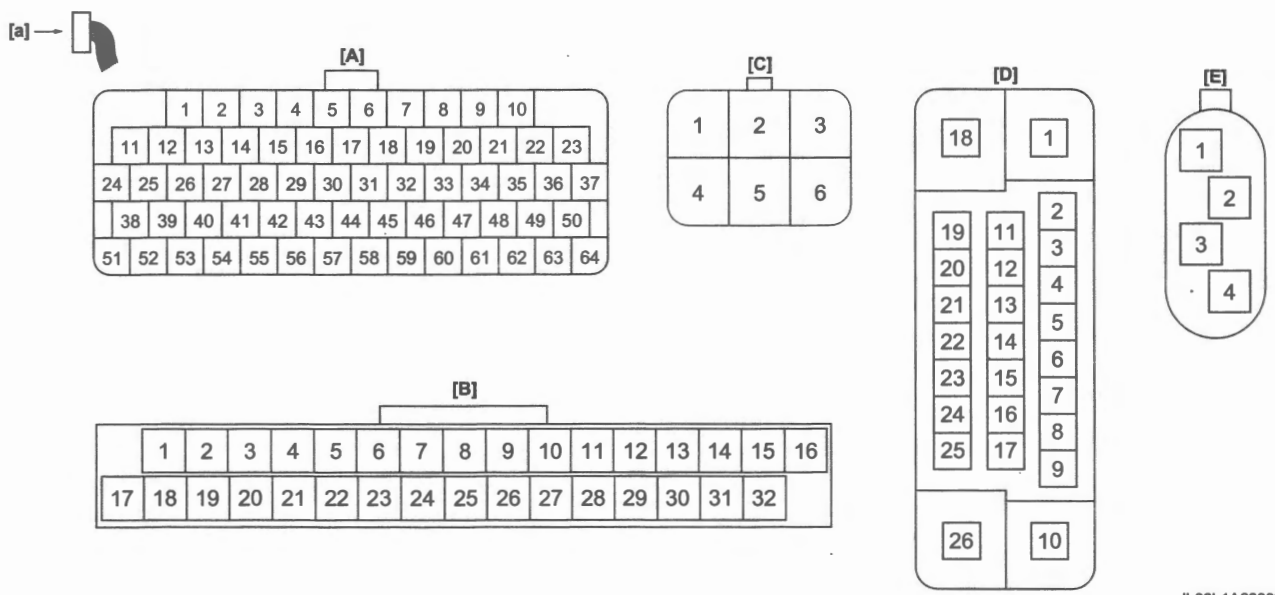

IL06L1A80002-03

[A]: ECM coupler (Coupler "A")	[C]: Mode select coupler (6P)	[E]: IMU coupler
[B]: Combination meter coupler	[D]: ABS control unit/HU coupler	

Component Location

CAN Communication System Component Location

BENL06L2A803001

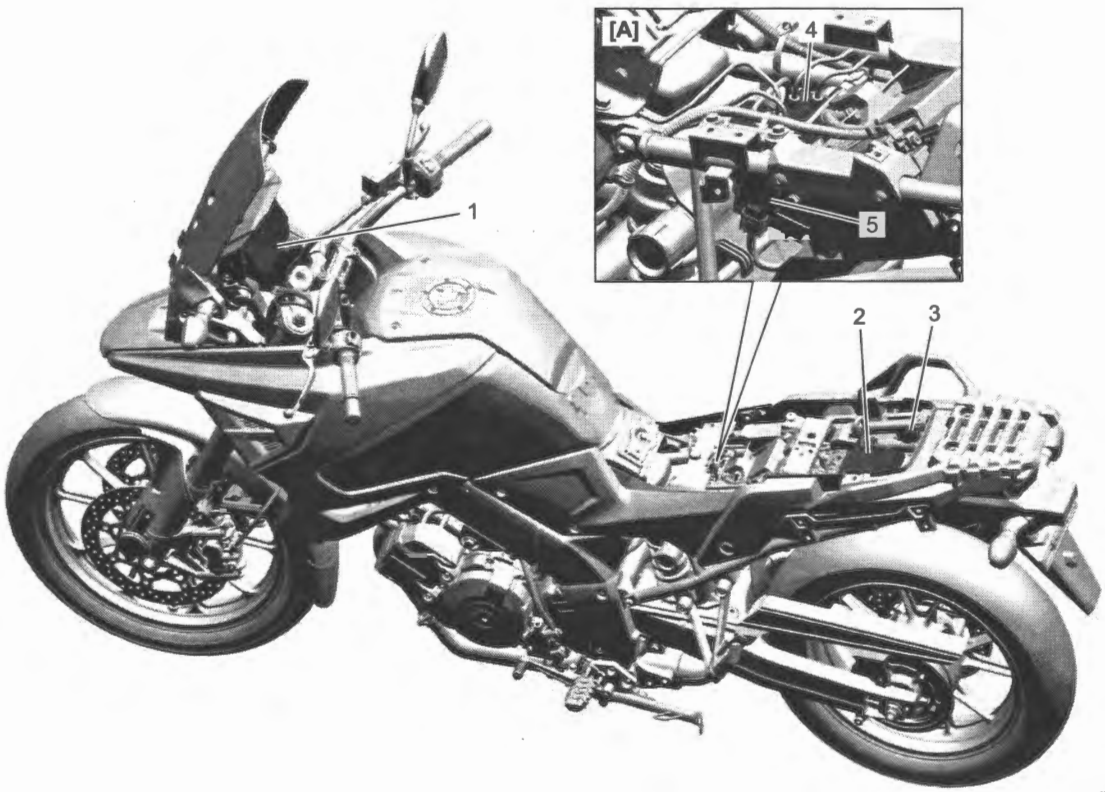

IL06L1A80022-01

[A]: With motion track brake system	2. ECM	4. ABS control unit/HU
1. Combination meter	3. Mode select coupler (6P)	5. IMU

Diagnostic Information and Procedures

CAN Communication Check

BENL06L2A804001

Troubleshooting Selection Procedure

Without motion track brake system

1) Turn the ignition switch ON.
2) Check if the traction control system indicator (1) displayed to combination meter.

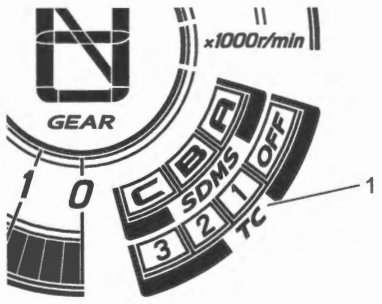

IL06L1A80023-01

3) Check that communication between SDS-II and ECM is possible.
4) Perform the troubleshooting according to the following table.

Check result		Troubleshooting
Traction control system indicator	Communication between SDS-II and ECM	
Displayed	Possible	Perform the "Troubleshooting for Lost Communication" (Page 10H-10). When CAN-DTC is not detected, CAN communication system is good condition.
	Not possible	Check CAN communication circuit between mode select coupler (6P) and ECM coupler for open circuit.
Not displayed	Possible	Perform the "Troubleshooting for Lost Communication" (Page 10H-10).
	Not possible	Perform the "Diagnosis flow: [a] to [b]" in "Troubleshooting" under "Troubleshooting for Communication Bus Off" (Page 10H-15).

With motion track brake system

1) Turn the ignition switch ON.
2) Check if the traction control system indicator (1) and ABS mode select indicator (2) displayed to combination meter.

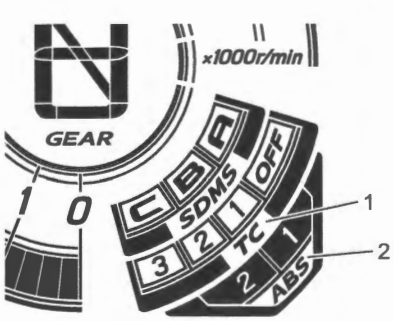

IL06L1A80024-01

3) Check that communication between SDS-II and ECM is possible.

4) Perform the troubleshooting according to the following table.

Check result			Troubleshooting
Traction control system indicator	ABS mode select indicator	Communication between SDS-II and ECM	
Displayed	Displayed	Possible	Perform the "Troubleshooting for Lost Communication" (Page 10H-10). When CAN-DTC is not detected, CAN communication system is good condition.
		Not possible	Check CAN communication circuit between mode select coupler (6P) and ECM coupler for open circuit.
	Not displayed	Possible	Perform the "Troubleshooting for Lost Communication" (Page 10H-10).
		Not possible	1. Check CAN communication circuit between mode select coupler (6P) and ECM coupler for open circuit. 2. Perform the "Troubleshooting for Lost Communication" (Page 10H-10).
Not displayed	Displayed	Possible	Perform the "Troubleshooting for Lost Communication" (Page 10H-10).
		Not possible	Perform the "Diagnosis flow: [a]" in "Troubleshooting" under "Troubleshooting for Lost Communication" (Page 10H-10).
	Not displayed	Possible	Perform the "Troubleshooting for Lost Communication" (Page 10H-10).
		Not possible	Perform the "Diagnosis flow: [a] to [d]" in "Troubleshooting" under "Troubleshooting for Communication Bus Off" (Page 10H-15).

DTC Check

BENL06L2A804002

- ECM: refer to "DTC Check" in Section 1A (Page 1A-11).
- ABS control unit / HU: refer to "DTC Check" in Section 4E (Page 4E-14).

DTC Clearance

BENL06L2A804003

- ECM: refer to "DTC Clearance" in Section 1A (Page 1A-12).
- ABS control unit / HU: refer to "DTC Clearance" in Section 4E (Page 4E-16).

CAN DTC (Lost Communication and Communication Bus Off) Table

BENL06L2A804004

NOTE

- **If communication between SDS-II and ECM is not possible, perform the "CAN Communication Check" (Page 10H-4).**
- **C code of ECM corresponding to CAN DTCs is not indicated during failure.**

DTC		DTC name	DTC detecting condition
ECM			
U0073	C83	Control Module Communication Bus Off ☞(Page 10H-15)	ECM fails to transmit and receive the data via CAN for specified time continuously.
U0121	C83	Lost Communication With ABS Control Module ☞(Page 10H-10)	Receiving error of the data from ABS control unit/HU via CAN for specified time continuously.
U0123	C83	Lost Communication With IMU ☞(Page 10H-10)	Receiving error of the data from IMU via CAN for specified time continuously.
U0155	C83	Lost Communication With Instrument Panel Cluster (IPC) Control Module ☞(Page 10H-10)	Receiving error of the data from combination meter via CAN for specified time continuously.
ABS control unit / HU			
U0073	11	Control Module Communication Bus Off ☞(Page 10H-15)	ABS control unit/HU fails to transmit and receive the data via CAN for specified time continuously.
U0100	12	Lost Communication With ECM ☞(Page 10H-10)	Receiving error of the data from ECM via CAN for specified time continuously.
U0123	13	Lost Communication With IMU ☞(Page 10H-10)	Receiving error of the data from IMU via CAN for specified time continuously.
U0155	14	Lost Communication With Instrument Panel Cluster (IPC) Control Module ☞(Page 10H-10)	Receiving error of the data from combination meter via CAN for specified time continuously.

CAN Signal Reference Waveform

BENL06L2A804005

- "Normal Waveform" (Page 10H-7) and "Examples of Abnormal Waveforms" (Page 10H-8) of CAN signal are shown for reference.

NOTE

Waveforms in "Examples of abnormal waveforms" are selected examples of CAN communication waveforms seen when an abnormal condition occurs. However, these waveforms may not be exactly the same in appearance as observed waveforms. Therefore, to identify an abnormal condition, select the waveform that is most similar to the observed waveform from "Examples of Abnormal Waveforms" (Page 10H-8).

- Observe the waveform according to the following procedure.
  a. Turn the ignition switch OFF.
  b. Connect the oscilloscope (1) to mode select coupler (6P) (2).
  c. Turn the ignition switch ON.
  d. Observe the waveform.

Circuit	Oscilloscope		Terminal No.
	Channel	Probe	
CAN High signal	1	+	"T2"
		–	Ground
CAN Low signal	2	+	"T5"
		–	Ground

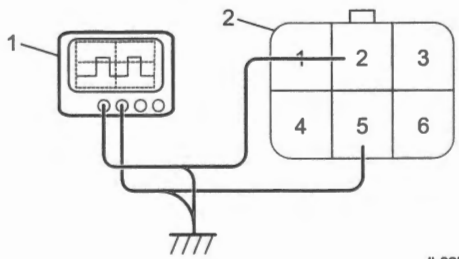

IL06L1A80006-01

Normal Waveform

Normal waveform	Description
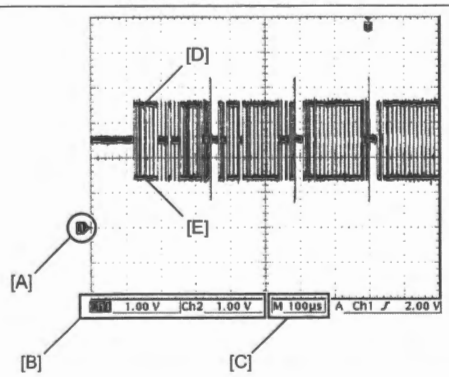 IL06L1A80003-01	Reference voltages for both CAN High signal and CAN Low signal are 2.5 V. Waveform of CAN High signal is 2.5 – 3.5 V and that of CAN Low signal is 2.5 – 1.5 V.

[A]: Ground level of each channel	[D]: Waveform of channel 1 (CAN High signal)
[B]: VOLT/DIV of each channel	[E]: Waveform of channel 2 (CAN Low signal)
[C]: TIME/DIV of each channel	

Examples of Abnormal Waveforms

Possible cause	Characteristic waveform		Description
	CAN High signal	CAN Low signal	
Shorted to ground	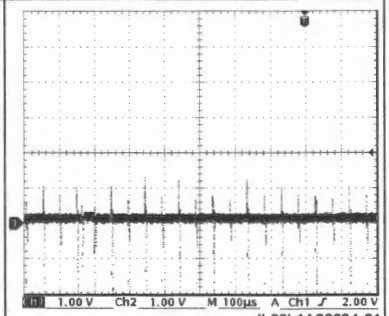 IL06L1A80004-01	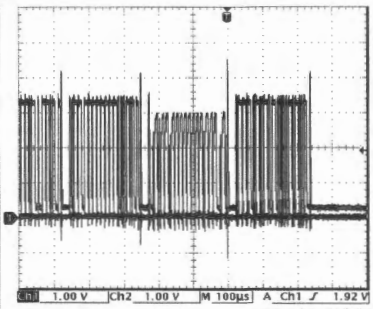 IL06L1A80005-01	**In case CAN High signal wire is shorted to ground circuit** Both of CAN High signal and CAN Low signal are fixed to GND level (0 V). **In case CAN Low signal wire is shorted to ground circuit** Reference voltages for both of CAN High signal and CAN Low signal are GND level (0 V) and CAN High signal waveform oscillates irregularly. • CAN High signal: Between 0 V and 3.5 V • CAN Low signal: Fixed to 0 V
Opened	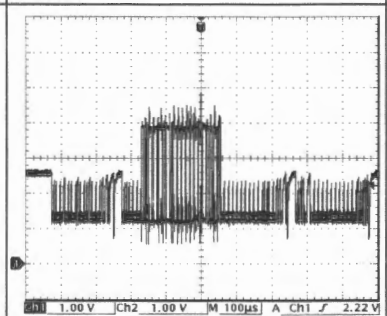 IL06L1A80007-01	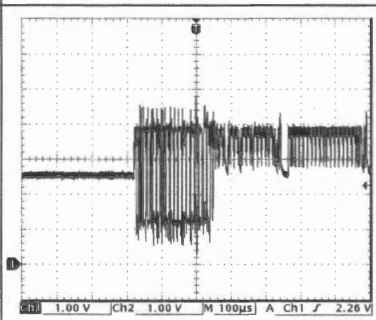 IL06L1A80008-01	**In case CAN High signal wire is open** Reference voltages for both CAN High signal and CAN Low signal are 2.5 V and these waveforms oscillate irregularly. • CAN High signal: Between 4.0 V and 1.0 V • CAN Low signal: Between 2.5 V and 1.0 V **In case CAN Low signal wire is open** Reference voltages for both of CAN High signal and CAN Low signal are 2.5 V and these waveforms oscillate irregularly. • CAN High signal: Between 2.5 V and 4.0 V • CAN Low signal: Between 1.0 V and 4.0 V
Shorted to power supply circuit (12 V)	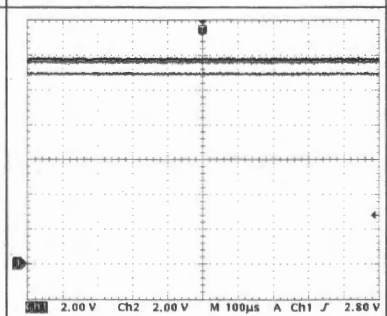 IL06L1A80009-01	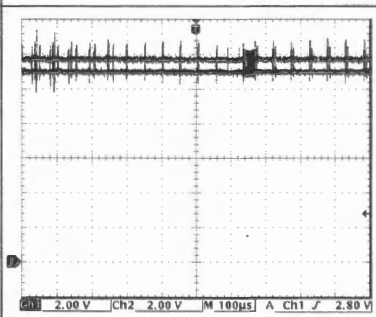 IL06L1A80010-01	**In case CAN High signal wire is shorted to power supply circuit (12 V)** CAN High signal is fixed to 12 V and CAN Low signal is fixed to 11 V. **In case CAN Low signal wire is shorted to power supply circuit (12 V)** CAN High signal is fixed to 11 V and CAN Low signal is fixed to 12 V.

Possible cause	Characteristic waveform		Description
	CAN High signal	CAN Low signal	
Shorted to power supply circuit (5 V)	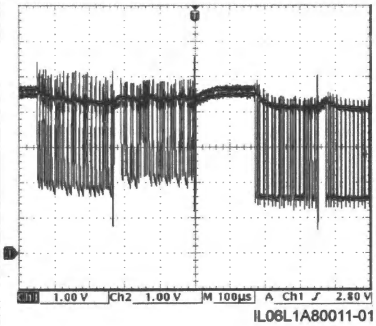 IL06L1A80011-01	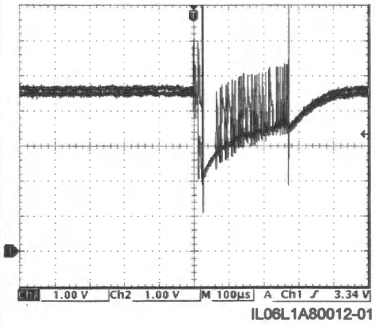 IL06L1A80012-01	**In case CAN High signal wire is shorted to power supply circuit (5 V)** Reference voltages for both CAN High signal and CAN Low signal are 4.5 V and these waveforms oscillate irregularly. • CAN High signal: Between 5.5 V and 3.5 V • CAN Low signal: Between 5.0 V and 1.0 V **In case CAN Low signal wire is shorted to power supply circuit (5 V)** Reference voltage is 4.5 V and phase is the same for both CAN High signal and CAN Low signal, and waveforms oscillate irregularly between 6.0 V and 1.0 V.
CAN High signal and CAN Low signal wires are shorted to each other	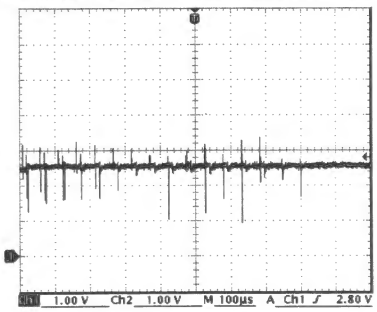 IL06L1A80013-01		Both of CAN High signal and CAN Low signal are fixed to near 2.5 V.

Troubleshooting for Lost Communication

BENL06L2A804006

NOTE

Perform "CAN Communication Check" (Page 10H-4): before performing this troubleshooting.

Wiring Diagram

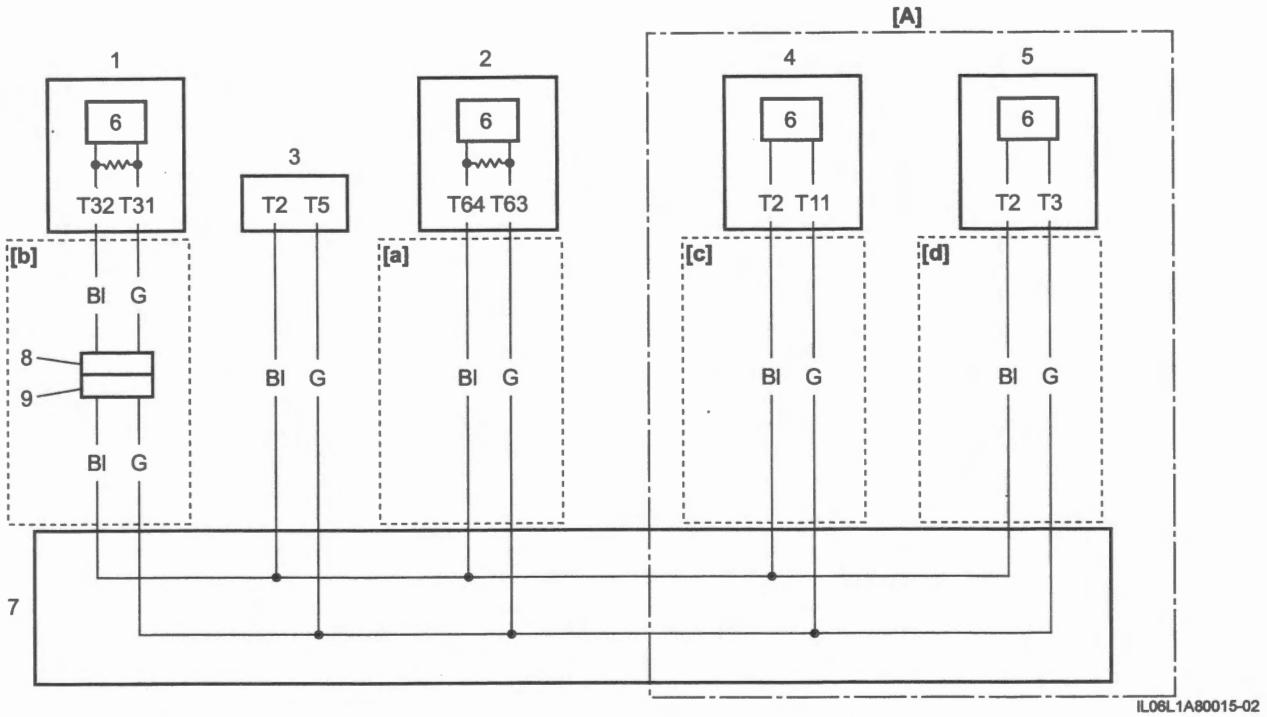

IL06L1A80015-02

[A]: With motion track brake system	3. Mode select coupler (6P)	7. J/C
[a] to [d]: CAN communication line (linked with diagnosis flows [a] to [d] of "Diagnosis Flow Selection Table")	4. ABS control unit/HU	8. Sub harness coupler
1. Combination meter	5. IMU	9. Main harness coupler
2. ECM	6. CAN driver	

Terminal arrangement of wiring harness coupler (View [a])

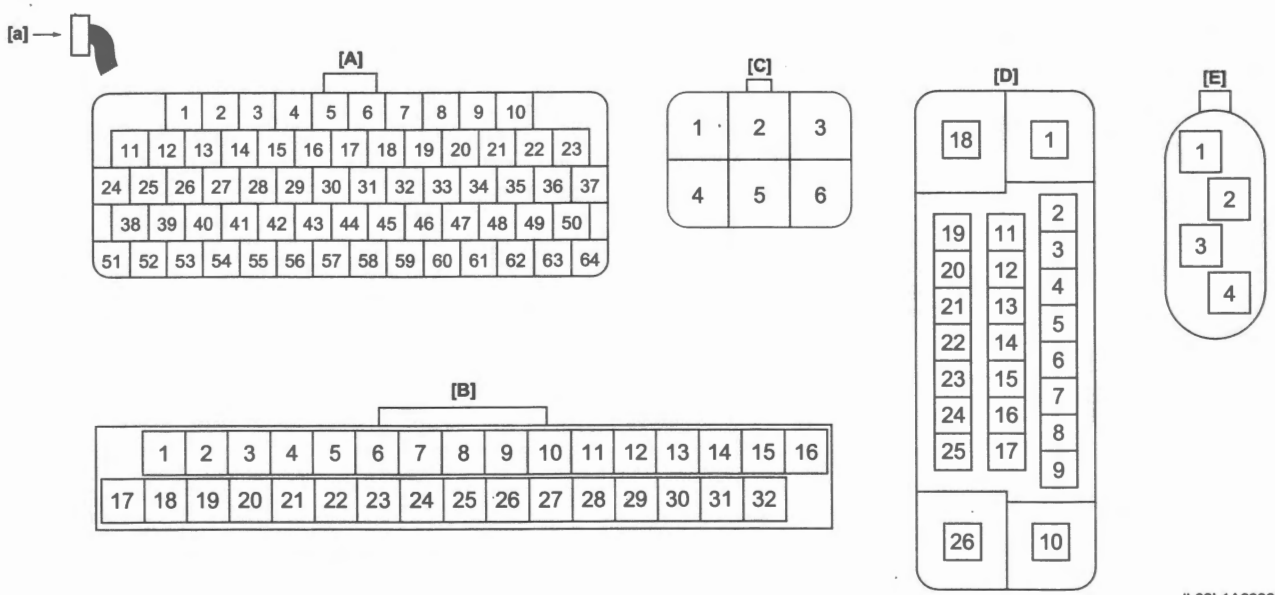

IL06L1A80002-03

[A]: ECM coupler (Coupler "A")	[C]: Mode select coupler (6P)	[E]: IMU coupler
[B]: Combination meter coupler	[D]: ABS control unit/HU coupler	

Diagnosis Flow Selection Table

NOTE

- **If an individual control module or sensor fails to communicate, check whether power supply circuit or ground circuit of control module or sensor is in good condition, referring to system circuit diagram, etc. before diagnosing trouble with flow chart.**
- **Diagnosis flows [a] to [d] link with CAN communication lines [a] to [d] of "Wiring Diagram" (Page 10H-10).**
- **Occurrence of multiple troubles is not included in the scope of this trouble diagnosis.**
- **Combination meter in itself does not have a function to display CAN communication error in DTC.**
  - ***1: Traction control system indicator in LCD is not displayed.**
  - ***2: ABS mode select indicator in LCD is not displayed.**

Without motion track brake system

CAN DTC detecting control module / sensor	Diagnosis flow
—	
Combination meter *1	"Diagnosis flow: [a] to [b]" (Page 10H-12)
U0155	
ECM	"Diagnosis flow: [a] to [b]" (Page 10H-12)

With motion track brake system

CAN DTC detecting control module / sensor	Diagnosis flow
U0100	
ABS control unit/HU	"Diagnosis flow: [c]" (Page 10H-14)
ABS control unit/HU and combination meter *1	"Diagnosis flow: [a]" (Page 10H-12)
—	
Combination meter *1	"Diagnosis flow: [b]" (Page 10H-13)
U0121	
ECM	"Diagnosis flow: [a]" (Page 10H-12)
ECM and combination meter *2	"Diagnosis flow: [c]" (Page 10H-14)
—	
Combination meter *2	"Diagnosis flow: [b]" (Page 10H-13)
U0123	
ECM	"Diagnosis flow: [a]" (Page 10H-12)
ABS control unit/HU	"Diagnosis flow: [c]" (Page 10H-14)
ECM and ABS control unit/HU	"Diagnosis flow: [d]" (Page 10H-14)
U0155	
ECM	"Diagnosis flow: [a]" (Page 10H-12)
ABS control unit/HU	"Diagnosis flow: [c]" (Page 10H-14)
ECM and ABS control unit/HU	"Diagnosis flow: [b]" (Page 10H-13)

Troubleshooting
Diagnosis flow: [a]

Step 1

CAN communication circuit [a] check

1) Turn the ignition switch OFF.
2) Disconnect the ECM coupler "A". ☞(Page 1C-2)
3) Check for proper terminal connection to the ECM coupler "A".
4) If connections are OK, measure the resistance between the mode select coupler (6P) and ECM coupler "A" as follows.
   - Between "T2" at the mode select coupler (6P) (1) and "T64" at the ECM coupler "A" (2): less than 1 Ω
   - Between "T5" at the mode select coupler (6P) and "T63" at the ECM coupler "A": less than 1 Ω

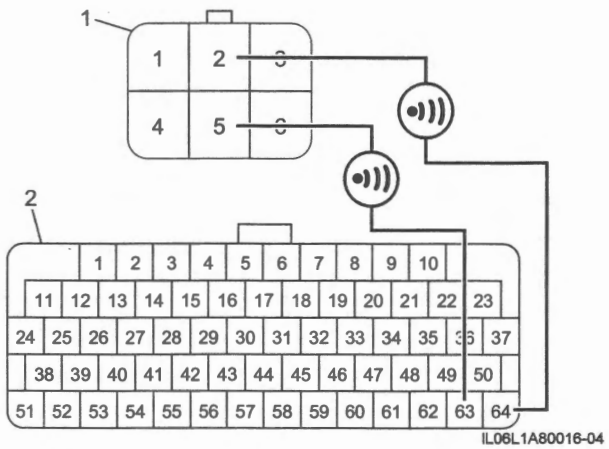

IL06L1A80016-04

Is check result OK?

Yes	Replace the ECM and inspect it again. ☞(Page 1C-2)
No	Repair or replace the defective wire harness.

Diagnosis flow: [a] to [b]

Step 1

CAN communication circuit [a] check

1) Turn the ignition switch OFF.
2) Disconnect the ECM coupler "A". ☞(Page 1C-2)
3) Check for proper terminal connection to the ECM coupler "A".
4) If connections are OK, measure the resistance between the mode select coupler (6P) and ECM coupler "A" as follows.
   - Between "T2" at the mode select coupler (6P) (1) and "T64" at the ECM coupler "A" (2): less than 1 Ω
   - Between "T5" at the mode select coupler (6P) and "T63" at the ECM coupler "A": less than 1 Ω

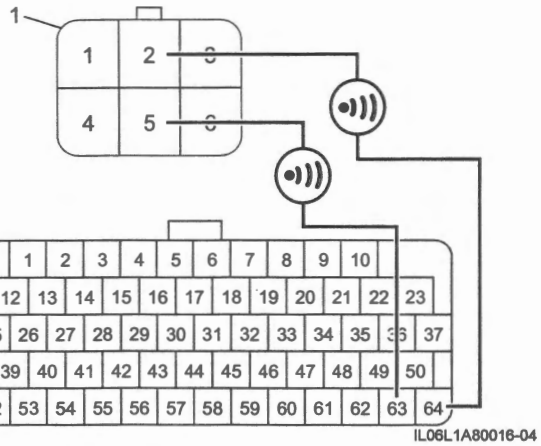

IL06L1A80016-04

Is check result OK?

Yes	Go to Step 2.
No	Repair or replace the defective wire harness.

Step 2

CAN communication circuit [b] check

1) Disconnect the combination meter coupler. ☞(Page 9C-16)
2) Disconnect the sub harness coupler from main harness coupler.
3) Check for proper terminal connection to the combination meter coupler, sub harness coupler and main harness coupler.
4) If connections are OK, connect the sub harness coupler to the main harness coupler.
5) Measure the resistance between the mode select coupler (6P) and combination meter coupler as follows.
   - Between "T2" at the mode select coupler (6P) (1) and "T32" at the combination meter coupler (2): less than 1 Ω
   - Between "T5" at the mode select coupler (6P) and "T31" at the combination meter coupler: less than 1 Ω

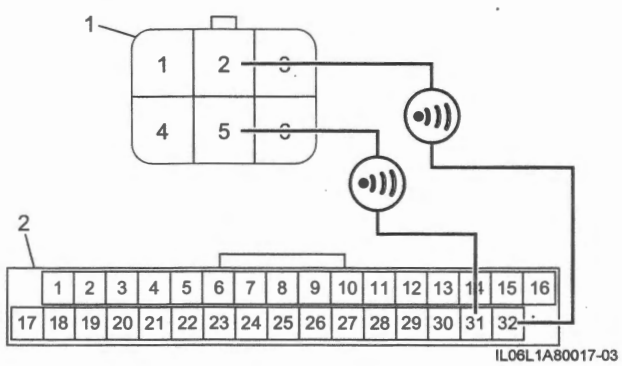

IL06L1A80017-03

Is check result OK?

Yes Go to Step 3.

No Repair or replace the defective wire harness.

Step 3

Combination meter CAN termination resistor check

1) Connect the combination meter coupler. ☞(Page 9C-16)
2) Measure the resistance between the "T2" and "T5" of mode select coupler (6P) (1).

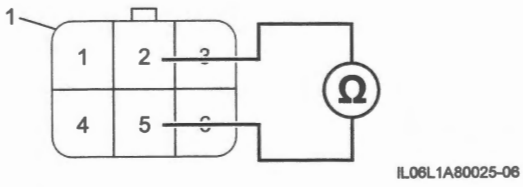

IL06L1A80025-06

Is resistance 114 – 134 Ω?

Yes Go to Step 4.

No Replace the combination meter and inspect it again. ☞(Page 9C-16)

Step 4

ECM CAN termination resistor check

1) Disconnect the combination meter coupler. ☞(Page 9C-16)
2) Connect the ECM coupler "A". ☞(Page 1C-2)
3) Measure the resistance between the "T2" and "T5" of mode select coupler (6P) (1).

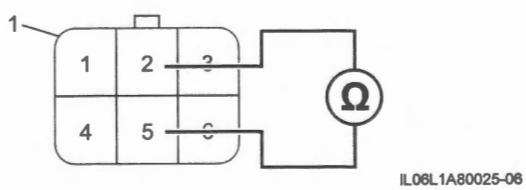

IL06L1A80025-06

Is resistance 114 – 134 Ω?

Yes Go to Step 5.

No Replace the ECM and inspect it again. ☞(Page 1C-2)

Step 5

SDS-II communication check

1) Connect the battery lead wire to battery, If the battery is removed to disconnect the ECM coupler.
2) Check that communication between SDS-II and ECM is possible.

Is communication possible?

Yes Replace the combination meter and inspect it again. ☞(Page 9C-16)

No Replace the ECM and inspect it again. ☞(Page 1C-2)

Diagnosis flow: [b]

Step 1

CAN communication circuit [b] check

1) Turn the ignition switch OFF.
2) Disconnect the combination meter coupler. ☞(Page 9C-16)
3) Disconnect the sub harness coupler from main harness coupler.
4) Check for proper terminal connection to the combination meter coupler, sub harness coupler and main harness coupler.
5) If connections are OK, connect the sub harness coupler to the main harness coupler.
6) Measure the resistance between the mode select coupler (6P) and combination meter coupler as follows.
   - Between "T2" at the mode select coupler (6P) (1) and "T32" at the combination meter coupler (2): less than 1 Ω
   - Between "T5" at the mode select coupler (6P) and "T31" at the combination meter coupler: less than 1 Ω

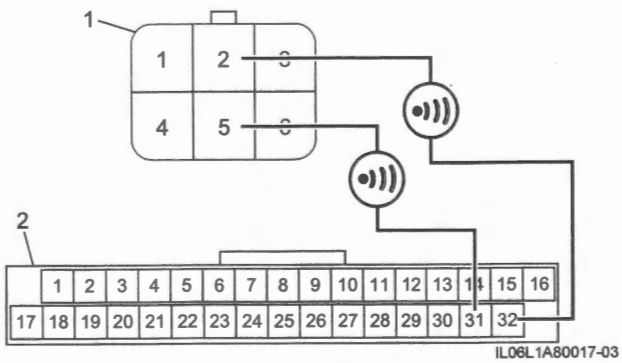

IL06L1A80017-03

Is check result OK?

Yes Replace the combination meter and inspect it again. ☞(Page 9C-16)

No Repair or replace the defective wire harness.

Diagnosis flow: [c]

Step 1

CAN communication circuit [c] check

1) Turn the ignition switch OFF.
2) Disconnect the ABS control unit/HU coupler. ☞(Page 4E-54)
3) Check for proper terminal connection to the ABS control unit/HU coupler.
4) If connections are OK, measure the resistance between the mode select coupler (6P) and ABS control unit/HU coupler as follows.
   - Between "T2" at the mode select coupler (6P) (1) and "T2" at the ABS control unit/HU coupler (2): less than 1 Ω
   - Between "T5" at the mode select coupler (6P) and "T11" at the ABS control unit/HU coupler: less than 1 Ω

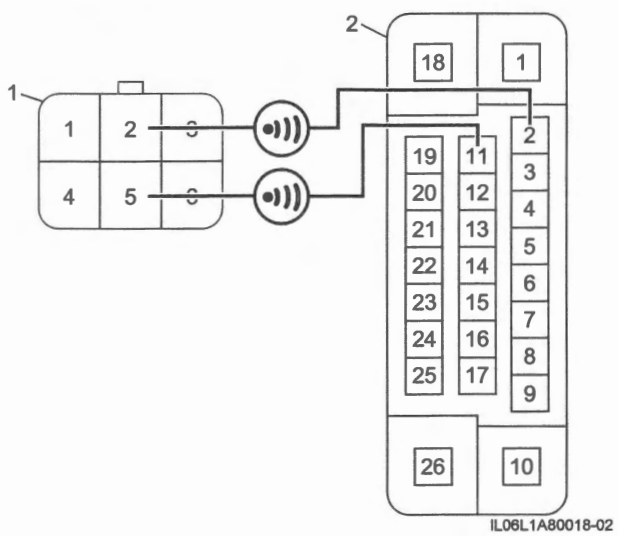

IL06L1A80018-02

Is check result OK?

Yes	Replace the ABS control unit/HU and inspect it again. ☞(Page 4E-54)
No	Repair or replace the defective wire harness.

Diagnosis flow: [d]

Step 1

CAN communication circuit [d] check

1) Turn the ignition switch OFF.
2) Disconnect the IMU coupler. ☞(Page 4E-56)
3) Check for proper terminal connection to the IMU coupler.
4) If connections are OK, measure the resistance between the mode select coupler (6P) and IMU coupler as follows.
   - Between "T2" at the mode select coupler (6P) (1) and "T2" at the IMU coupler (2): less than 1 Ω
   - Between "T5" at the mode select coupler (6P) and "T3" at the IMU coupler: less than 1 Ω

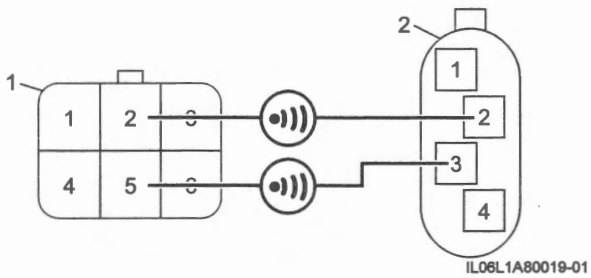

IL06L1A80019-01

Is check result OK?

Yes	Replace the IMU and inspect it again. ☞(Page 4E-56)
No	Repair or replace the defective wire harness.

Troubleshooting for Communication Bus Off

BENL06L2A804007

NOTE

Perform "CAN Communication Check" (Page 10H-4): before performing this troubleshooting.

Wiring Diagram

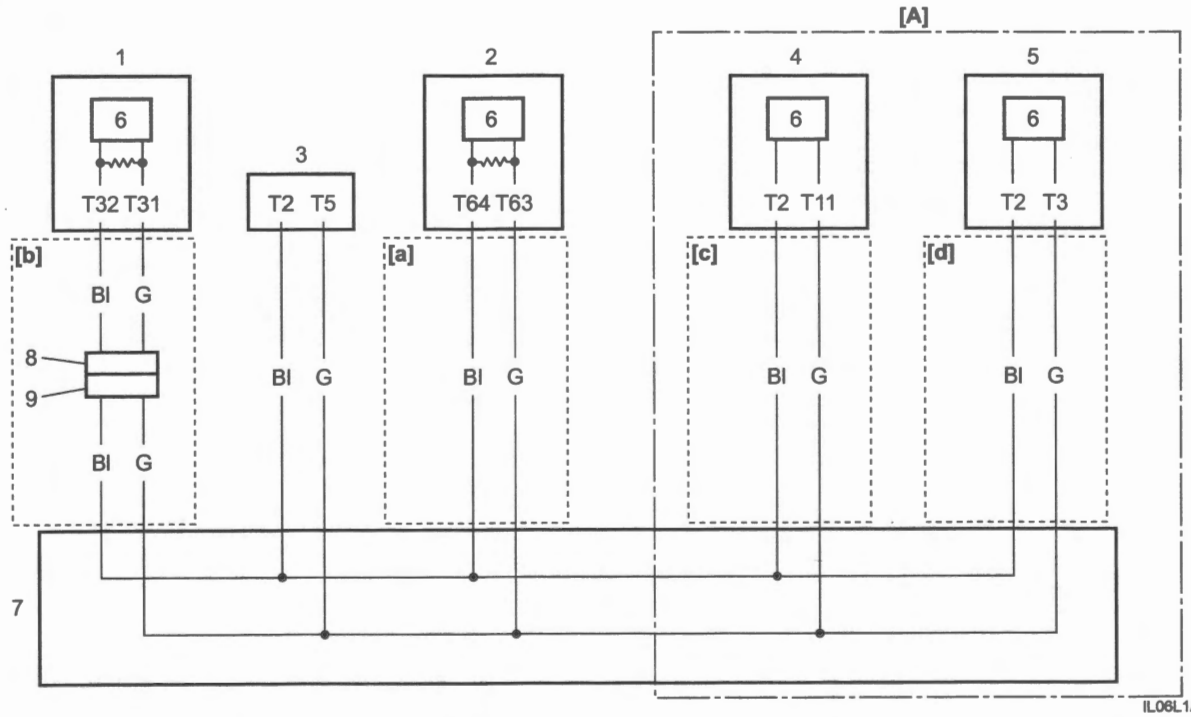

IL06L1A80015-02

[A]: With motion track brake system	3. Mode select coupler (6P)	7. J/C
[a] to [d]: CAN communication line (linked with diagnosis flows [a] to [d] of "Diagnosis Flow Selection Table")	4. ABS control unit/HU	8. Sub harness coupler
1. Combination meter	5. IMU	9. Main harness coupler
2. ECM	6. CAN driver	

Terminal arrangement of wiring harness coupler (View [a])

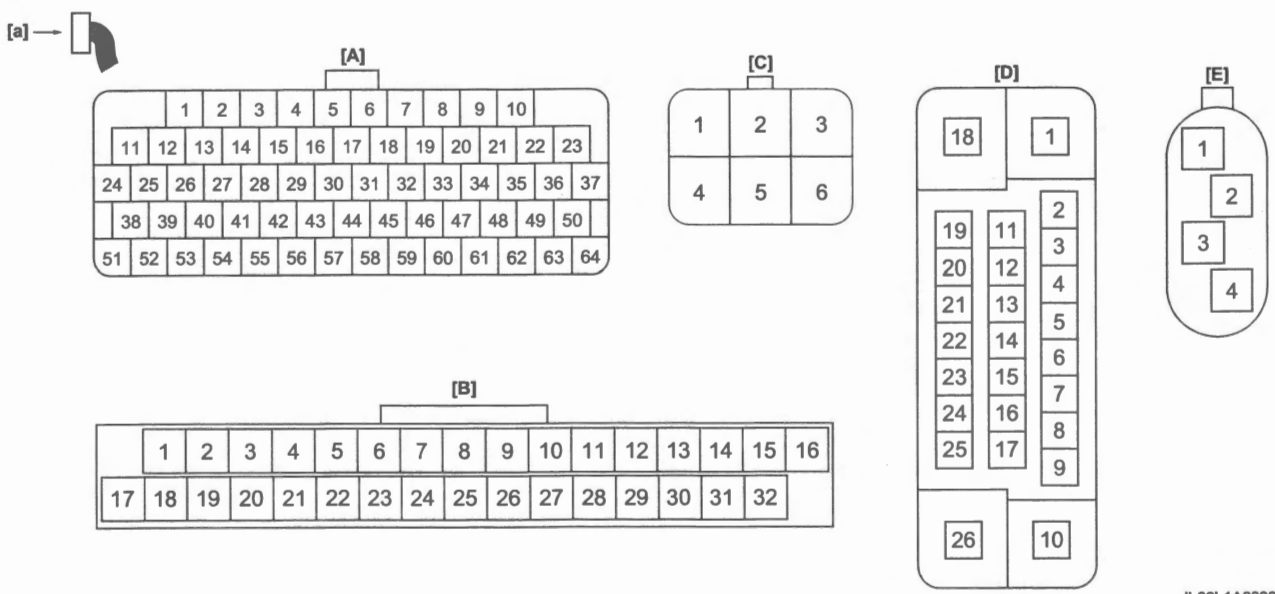

IL06L1A80002-03

[A]: ECM coupler (Coupler "A")	[C]: Mode select coupler (6P)	[E]: IMU coupler
[B]: Combination meter coupler	[D]: ABS control unit/HU coupler	

Troubleshooting

NOTE

Diagnosis flows [a] to [d] link with CAN communication lines [a] to [d] of "Wiring Diagram" (Page 10H-15).

Diagnosis flow: [a] to [b]

Step 1

CAN communication circuit check

1) Turn the ignition switch OFF.
2) Disconnect couplers from all the control modules and sensors communicating by CAN.
   - ECM: ☞(Page 1C-2)
   - Combination meter: ☞(Page 9C-16)
3) Disconnect the sub harness coupler from the main harness coupler.
4) Check for proper terminal connection to the couplers, which was disconnected in step 2) and 3).
5) If connections are OK, connect the sub harness coupler to the main harness coupler.
6) Check the following points.
   - Resistance
     – Between "T2" at the mode select coupler (6P) (1) and ground: infinity
     – Between "T5" at the mode select coupler (6P) and ground: infinity

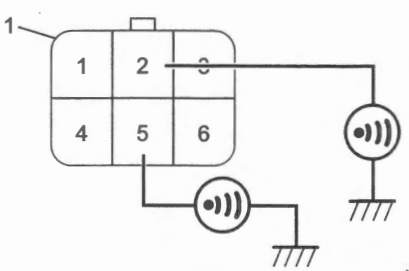

IL06L1A80020-01

     – Between "T2" and "T5" at the mode select coupler (6P) (1): infinity

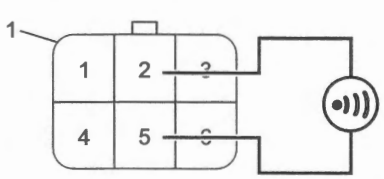

IL06L1A80014-07

   - Voltage
     – Turn the ignition switch ON.
     – Between "T2" at the mode select coupler (6P) (1) and ground: approx. 0 V
     – Between "T5" at the mode select coupler (6P) (1) and ground: approx. 0 V

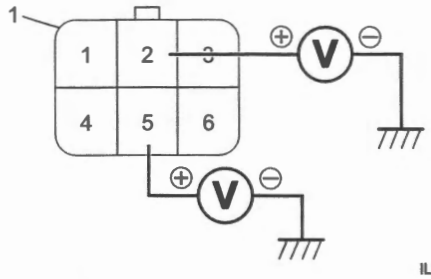

IL06L1A80021-01

Is check result OK?

Yes — Go to Step 2.

No — Repair or replace the defective wire harness.

Step 2

Combination meter CAN termination resistor check

1) Connect the combination meter coupler. ☞(Page 9C-16)
2) Measure the resistance between the "T2" and "T5" of mode select coupler (6P) (1).

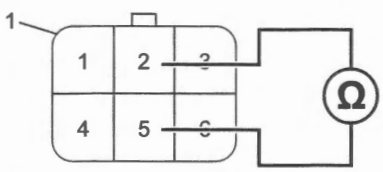

IL06L1A80025-06

Is resistance 114 – 134 Ω?

Yes — Go to Step 3.

No — Replace the combination meter and inspect it again. ☞(Page 9C-16)

Step 3

ECM CAN termination resistor check

1) Disconnect the combination meter coupler. ☞(Page 9C-16)
2) Connect the ECM coupler "A". ☞(Page 1C-2)
3) Measure the resistance between the "T2" and "T5" of mode select coupler (6P) (1).

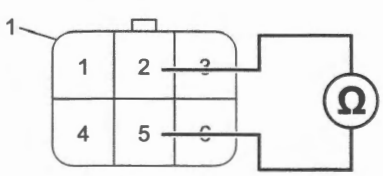

IL06L1A80025-06

Is resistance 114 – 134 Ω?

Yes Go to Step 4.

No Replace the ECM and inspect it again. ☞(Page 1C-2)

Step 4

SDS-II communication check

1) Connect the battery lead wire to battery, If the battery is removed to disconnect the ECM coupler.
2) Check that communication between SDS-II and ECM is possible.

Is communication possible?

Yes Replace the combination meter. ☞(Page 9C-16)

No Replace the ECM and inspect it again. ☞(Page 1C-2)

Diagnosis flow: [a] to [d]

Step 1

CAN communication circuit check

1) Turn the ignition switch OFF.
2) Disconnect couplers from all the control modules and sensors communicating by CAN.
   - ECM: ☞(Page 1C-2)
   - Combination meter: ☞(Page 9C-16)
   - ABS control unit/HU: ☞(Page 4E-54)
   - IMU: ☞(Page 4E-56)
3) Disconnect the sub harness coupler from the main harness coupler.
4) Check for proper terminal connection to the couplers, which was disconnected in step 2) and 3).
5) If connections are OK, connect the sub harness coupler to the main harness coupler.
6) Check the following points.
   - Resistance
     – Between "T2" at the mode select coupler (6P) (1) and ground: infinity
     – Between "T5" at the mode select coupler (6P) and ground: infinity

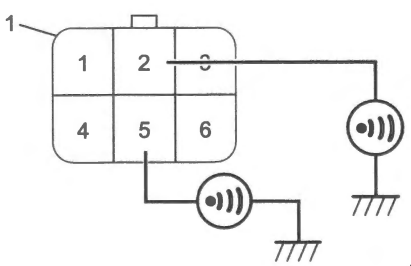

IL06L1A80020-01

– Between "T2" and "T5" at the mode select coupler (6P) (1): infinity

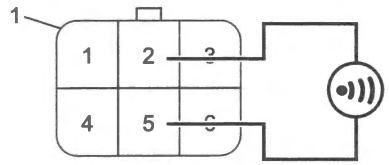

IL06L1A80014-07

- Voltage
  – Turn the ignition switch ON.
  – Between "T2" at the mode select coupler (6P) (1) and ground: approx. 0 V
  – Between "T5" at the mode select coupler (6P) (1) and ground: approx. 0 V

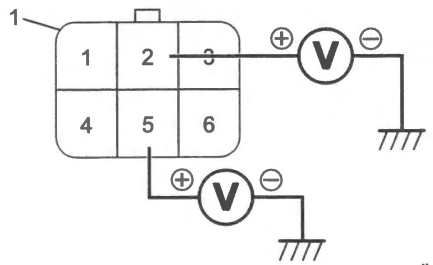

IL06L1A80021-01

Is check result OK?

Yes Go to Step 2.

No Repair or replace the defective wire harness.

Step 2

Combination meter CAN termination resistor check

1) Connect the combination meter coupler. ☞(Page 9C-16)
2) Measure the resistance between the "T2" and "T5" of mode select coupler (6P) (1).

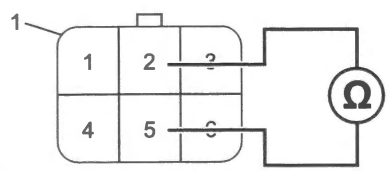

IL06L1A80025-06

Is resistance 114 – 134 Ω?

Yes Go to Step 3.

No Replace the combination meter and inspect it again. ☞(Page 9C-16)

Step 3

ECM CAN termination resistor check

1) Disconnect the combination meter coupler. ☞(Page 9C-16)
2) Connect the ECM coupler "A". ☞(Page 1C-2)
3) Measure the resistance between the "T2" and "T5" of mode select coupler (6P) (1).

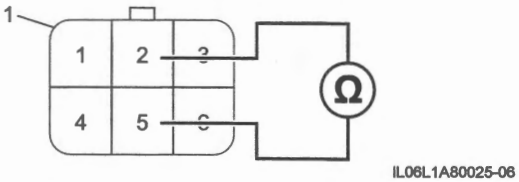

IL06L1A80025-06

Is resistance 114 – 134 Ω?

Yes — Go to Step 4.

No — Replace the ECM and inspect it again. ☞(Page 1C-2)

Step 4

SDS-II communication check

1) Connect the battery lead wire to battery, If the battery is removed to disconnect the ECM coupler.
2) Check that communication between SDS-II and ECM is possible.

Is communication possible?

Yes — Go to Step 5.

No — Replace the ECM and inspect it again. ☞(Page 1C-2)

Step 5

SDS-II communication check

1) Turn the ignition switch OFF.
2) Connect the combination meter coupler. ☞(Page 9C-16)
3) Check that communication between SDS-II and ECM is possible.

Is communication possible?

Yes — Go to Step 6.

No — Replace the combination meter and inspect it again. ☞(Page 9C-16)

Step 6

SDS-II communication check

1) Turn the ignition switch OFF.
2) Connect the ABS control unit/HU coupler. ☞(Page 4E-54)
3) Check that communication between SDS-II and ECM is possible.

Is communication possible?

Yes — Replace the IMU and inspect it again. ☞(Page 4E-56)

No — Replace the ABS control unit/HU and inspect it again. ☞(Page 4E-54)

Prepared by
SUZUKI MOTOR CORPORATION

January, 2020
Part No. 99500-06L00-03E
Printed in Japan